ИБП ABB DPA UPScale ST S2 (10-200 кВт) - технические спецификации. Юниджет

Постоянная ссылка на страницу: hhttps://www.uni-jet.com/catalog/ibp/on-line-ibp/abb-dpa-upscale-st/

Technical data sheet

DPA UPScale™ ST S2
10 – 200 kW

Power and productivity
for a better world™

Document information

File name	:	TDS_ABB_DPA_UPSCALE_ST_S2-10-200kW_EN_REV-E.docx
UPS model	:	DPA UPScale ST S2
Date of issue	:	14.10.2015
Article number	:	N/A
Document number	:	4NWD002987
Revision	:	E

Contents

1 Introduction

In environments that demand zero downtime, continuous power protection availability is essential. In order to respond to today's dynamic IT and process-related environments that experience daily change through new server technologies, migration and centralization, resilient and easily adaptable power protection concepts are required.

DPA UPScale is the foundation for continuous power protection availability of network-critical infrastructures in enterprise data centers where business continuity has paramount importance and in process control environments where manufacturing continuity is essential.

DPA UPScale is a second-generation, high power-density, leading-edge double conversion power protection technology that is standardized on a modular component approach that helps speed deployment, improve adaptability and increase system availability while reducing total cost of ownership.

DPA UPScale is a unique on-demand architecture that integrates the power rack, power distribution unit, backup battery rack and monitoring and management solutions to allow easy selection of optimized configurations.

DPA UPScale's distributed parallel architecture provides the highest availability, unmatched flexibility and, at the same time, lowest cost of ownership in IT environments.

This technical specification provides detailed technical information on the mechanical, electrical and environmental performance of the DPA UPScale model types to support tender and end-user requirements. The DPA UPScale family was designed to respond to the most stringent safety, EMC and other important UPS standards.

The UPS has the Classification Code VFI-SS-111.

2 System description

The DPA UPScale ST S2 is a three-phase, transformerless modular uninterruptible power system (UPS). It is a true on-line double conversion UPS providing quality power for sensitive equipment. Its modular design consists of:

- *DPA UPScale modules M10 (10 kW), M20 (20 kW)*
- *Maintenance bypass switch*
- *Incoming, outgoing and battery terminals*
- *Communication interfaces*
- *Parallel interface (option)*
- *System graphical display (option)*
- *Internal battery modules (option)*

The DPA UPScale ST S2 family has five models available:

- *DPA UPScale ST S2 40 (40 kW)*
- *DPA UPScale ST S2 60 (60 kW)*
- *DPA UPScale ST S2 80 (80 kW)*
- *DPA UPScale ST S2 120 (120 kW)*
- *DPA UPScale ST S2 200 (200 kW)*

DPA UPScale modules types:

- *UPScale M 10 (10 kW)*
- *UPScale M 20 (20 kW)*

Key features of DPA UPScale ST S2:

99.9999% (6 nines) availability

- Decentralized parallel architecture
- No single points of failure
- Redundant capacity (N+1) per frame
- Replace or add modules with no downtime
- Short mean time to repair (MTTR)

All-in-one solution

- Power range from 10 kW to 200 kW in a single frame
- Internal battery modules for short autonomies and external battery cabinets for long autonomies
- User-friendly interface per module and system level
- Remote control and monitoring options available

Low total cost of ownership

- Up to 96% true online efficiency
- Eco-mode efficiency ≥ 98%
- Unity power factor (kW = kVA)
- Low input harmonic distortion (THDi < 3%)
- Small footprint and high power density (472 kW/m^2)

Efficient service concept

- Simple power upgrade
- Fast maintenance
- Full front access
- Fewer spare parts needed

3 Mechanical characteristics

DPA UPScale S2		ST40	ST60	ST80	ST120	ST200
DPA UPScale ST S2 frames		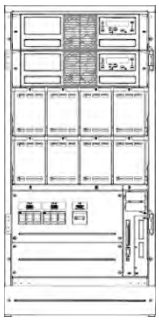		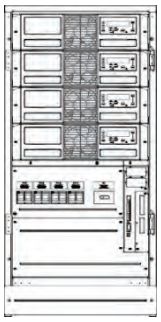	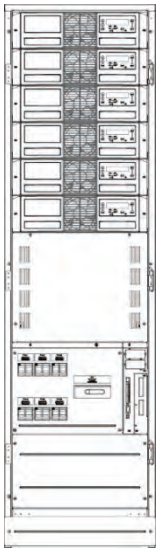	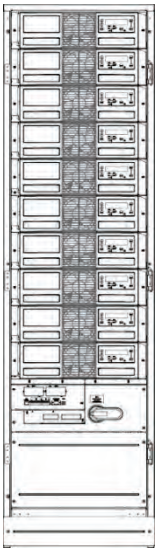
System power rating	*kW*	40	60	80	120	200
Max power modules per frame	-	2 modules	3 modules	4 modules	6 modules	10 modules
Internal battery blocks 12 V VRLA		up to 80 x 7 Ah	up to 240 x 7 Ah	-	-	-
Dimensions (WxHxD)	*mm*	550x1135x775	550x1975x775	550x1135x775	550 x 1975 x 775	
Weight empty frame w/o modules w/o batteries	*kg*	92	173	82	133	174
Weight of frame with modules and w/o batteries	*kg*	130 - 136	229 - 238	157 - 169	245 - 263	360 - 389
Audible noise at 1 m from front, 100% / 50% load, 20 kW modules	*dBA*	66 / 60[1)] [1)] approx.	66 / 60[1)]	68 / 62[1)]	68 / 62[1)]	70 / 64[1)]
Color	-	RAL 9005				
Access		Front access				
Cable entry		From bottom				
Protection class		IP20				

Module type		UPScale M 10	UPScale M 20
Module rated power	*kW*	10	20
Dimensions (WxHxD)	*mm*	488 x 132 x 540 (3HU)	
Weight	*kg*	18.6	21.5
Colors		RAL 9005	

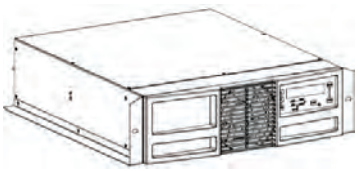

UPScale M10/M20 module

4 Environmental characteristics

The following data declarations are valid for DPA UPScale M10 and M20 modules.

Ambient temperature range	*°C*	0 - 40
Relative humidity range		< 95% (non-condensing)
Installation altitude with full rating ASL	*m*	1000
Derating power factor for installation altitude above 1000 m ASL	*m*	0.95 @ 1500 m 0.91 @ 2000 m 0.86 @ 2500 m 0.82 @ 3000 m
Storage temperature	*°C*	-25 - +70

The following are recommended for internal and external batteries:

Ambient temperature range	*°C*	20 – 25
Battery storage time at ambient temperature		Max. 6 months

5 Input characteristics

Module type		UPScale M10	UPScale M20
Module rated power	*kW*	10	20
Nominal input voltage	*V*	3 x 380/220 V+N, 3 x 400 V/230 V+N, 3 x 415/240 V+N	
Input voltage tolerance (ref to 3 x 400/230 V) for loads in%:	*V*	(-20%/+15%) 3 x 320/184 V to 3 x 460/265 V for <100% load (-26%/+15%) 3 x 296/170 V to 3 x 460/265 V for < 80% load (-35%/+15%) 3 x 260/150 V to 3 x 460/265 V for < 60% load	
Input frequency	*Hz*	35 – 70	
Input power factor	-	0.99 @ 100% load	
Inrush current	*A*	max. In	
Rated short-time withstand current (Icw)	*kA*	10 for 1.5 seconds	
AC power distribution system: TN-S, TN-C, TN-C-S, TT, 3ph + N			
Total harmonic distortion (THDi)	*%*	< 4.5	< 3.0
Max. input power with rated output power (cosphi = 1.0), rated input voltage and charged battery per module	*kW*	10.5	21
Max. input current with rated output power (cosphi = 1.0), rated input voltage and charged battery per module	*A*	15.2	30.4
Max. input power with rated output power (cosphi = 1.0), rated input voltage and discharged battery per module	*kW*	11.5	23
Max. input current with rated output power (cosphi = 1.0), rated input voltage and discharged battery per module	*A*	16.6	33.3
Bypass input rated voltage		(-/+15%) 3 x 400 V or 196 V to 264 V ph-N	

6 Battery characteristics

Module type		UPScale M10	UPScale M20
Battery type	-	Maintenance-free VRLA or NiCd	
No. VRLA 12 V battery blocks @ max. rated output power	-	30[2)] - 50	40[2)] - 50
Allowed no. of 1.2 V NiCd cells @ max. rated output power	-	300[2)] - 500	400[2)] - 500
Floating voltage	*VDC*	VRLA: 2.25 V/cell - NiCd: 1.4 V/cell	
End of discharge voltage	*VDC*	VRLA: 1.65 V/cell - NiCd: 1.05 V/cell	
Maximum charging current per module	*A*	4 (6 A charger is optional)	
Battery charging curve	-	Ripple-free; IU (DIN 41773)	
Temperature compensation	-	Standard (temp. sensor optional)	
Battery test	-	Automatic and periodically (adjustable)	

[2)] Min battery block range allowed under following conditions:

Module type		UPScale M10			UPScale M20		
No. VRLA 12 V battery blocks	-	30-32		34-50	40-46		48-50
Max power	*kW*	6	10	10	16	20	20
Max autonomy	*min*	any	5	any	any	5	any

7 Output characteristics

7.1 System output characteristics

DPA UPScale S2			
AC power distribution system		TN-S, TN-C, TN-C-S, TT, 3ph	
Output rated voltage	*V*	3 x 380/220 V or 3 x 400/230 V or 3 x 415/240 V	
Output voltage stability	*%*	Static: Dynamic (step load 0%-100% or 100%-0%)	< +/- 1% < +/- 4%
Output voltage distortion	*%*	With linear load With nonlinear load (EN62040-3:2001)	< 1.5% < 3%
Output frequency	*Hz*	50 Hz or 60 Hz (selectable)	
Output frequency tolerance	*%*	Synchronized with mains (selectable for bypass operation) Free running	< +/- 2% or < +/- 4% +/- 0.1%
Efficiency AC-AC (at cosphi 1.0) (tolerance +/- 0.5% applies on all figures)	*%*	Load : 100% 75% 50% 25% : 95.5 95.5 95 94.5	
Eco-mode efficiency at 100% load	*%*	98%	
Permissible unbalanced load (All three phases regulated independently)	*%*	100%	
Phase angle tolerance (With 100% unbalanced load)	*°*	< 2°	
Crest factor (load supported)		3:1	

7.2 Module output characteristics

Module type		UPScale M10	UPScale M20
Output rated apparent power (cosphi 0.8)	*kVA*	10	20
Output rated active power (cosphi 1.0)	*KW*	10	20
Output nominal current (In) at 230 VAC ph-N and cosphi 1.0	*A*	14.5	29
Overload capability on inverter	*%*	125% load 150% load	10 min. 60 sec.
Output short capability on static bypass (RMS)	*A*	10 x In during 20 ms	
Output short capability on inverter (RMS)	*A*	3.0 x In during 40 ms	2.25 x In during 40 ms (3.0 x In optional)
Static bypass transfer time: inverter → bypass / bypass → inverter / in Eco-mode	*ms*	<1 / <5 / <6	

7.3 Graphic: AC-AC efficiency with linear load @ cosphi 1

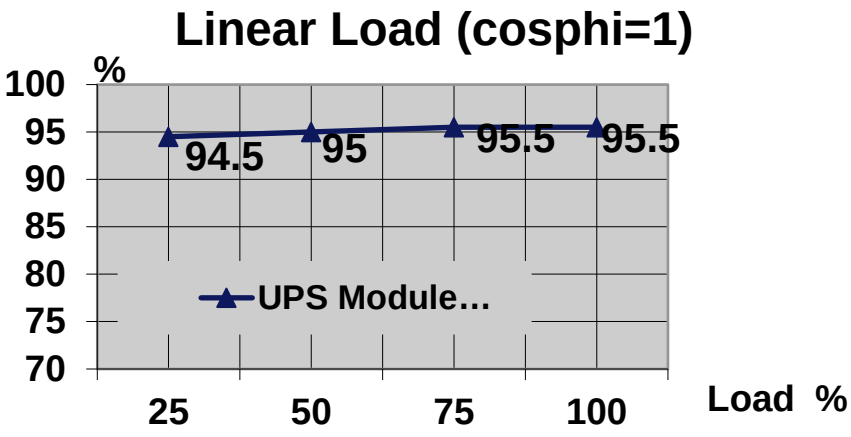

7.4 Graph: Output power in kW and kVA versus cosphi

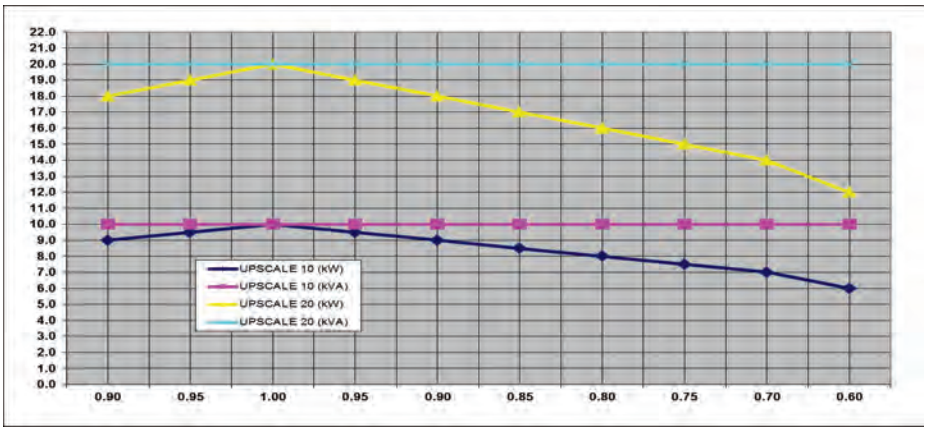

		UPScale module		UPScale module	
		M-10		M-20	
cos(φ)		kW	kVA	kW	kVA
	0.9	9	10	18	20
	0.95	9.5	10	19	20
unity	1	10	10	20	20
Ind.	0.95	10	10	19	20
	0.9	9	10	18	20
	0.85	8.5	10	17	20
	0.8	8	10	16	20
	0.75	7.5	10	15	20
	0.7	7	10	14	20
	0.6	6	10	12	20

8 Standards

Safety	EN 62040-1-1, EN 60950-1
Electromagnetic compatibility	EN 61000-6-4 Prod.standard: EN 62040-2 EN 61000-6-2 Prod.standard: EN 62040-2 EN 61000-4-2, EN 61000-4-3 - EN 61000-4-4 - EN 61000-4-5 - EN 61000-4-6
EMC classification, Emission class	C3
Immunity class	C3
Performance	IEC/EN 62040-3
Product certification	CE

9 Control and monitoring

9.1 DPA display

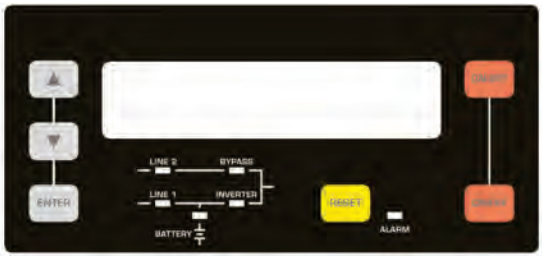

The DPA display and control panel module has three sections:

1. The LCD provides monitoring and measurement information
2. The mimic diagram delivers the general status of the UPS
3. Control keys allow the operator to manipulate UPS settings

9.2 System graphical display

The user-friendly touchscreen graphical display on the system level offers the opportunity to directly monitor the system status as well as the status of each individual module. The graphical display additionally provides all measurements (at module and system level) and the user can transfer from the inverter to bypass and vice-versa. All other commands must be performed on the DPA display. With both displays in place (module and system level), the UPS offers full user friendliness without making compromises on robustness.

9.3 Communication interfaces

Customer interfaces : outputs **Dry port X 2**	Five voltage-free contacts For remote signaling and automatic computer shutdown
Customer interfaces: inputs **Dry port X1**	1x remote shutdown [EMERGENCY OFF (normally closed)] 2x programmable customer's inputs (1st default as GEN-ON (normally open) (2nd free programmable customer's inputs (normally open) 1x temp. sensor for battery control 1x 12 VDC output (max.)
Serial ports RS232 on Sub-D9	1x system frame For monitoring and integration in network management
USB	1x for monitoring and software management
Network interface card (optional)	SNMP interface, Modbus TCP, Modbus RS-485

9.4 Customer interfaces: input and output dry ports

Block	Terminal	Contact	Signal	On Display	Function
X 2	X 2 / 1	NO	ALARM	MAINS_OK	Mains present
	X 2 / 2	NC			**Mains failure**
	X 2 / 3	C			Common
	X 2 / 4	NO	Message	LOAD_ON_INV	**Load on inverter**
	X 2 / 5	NC			(Load on mains bypass)
	X 2 / 6	C			Common
	X 2 / 7	NO	ALARM	BATT_LOW	**Battery low**
	X 2 / 8	NC			Battery OK
	X 2 / 9	C			Common
	X 2 / 10	NO	Message	LOAD_ON_MAINS	**Load on bypass** (Mains)
	X 2 / 11	NC			(Load on inverter)
	X 2 / 12	C			Common
	X 2 / 13	NO	ALARM	COMMON_ALARM	**Common ALARM** (System)
	X 2 / 14	NC			NO alarm condition
	X 2 / 15	C			Common
X1	X1 / 1	IN	+ 12 VDC		**Generator operation**
	X1 / 2	GND	GND		(NC = Generator ON)
	X1 / 3	IN	+ 12 VDC		**Customer IN 1**
	X1 / 4	GND	GND		(Function on request, to be defined)
	X1 / 5	IN	+ 3.3 VDC		**Temperature battery**
	X1 / 6	GND	GND		(If connected, the battery charger current if depending on the battery temp.)
	X1 / 7	IN	+ 12 VDC		**Remote shutdown**
	X1 / 8	GND	GND		(Do not remove the factory mounted bridge until external remote shutdown is connected)
	X1 / 9	IN	+ 12 VDC		**12 VDC source**
	X1 / 10	GND	GND		(max. 200 mA load)

All voltage-free contacts are rated 60 VAC max. and 500 mA max.

All the interfaces are connected to Phoenix spring terminals with wires (0.5 mm^2)

10 Multi-cabinet configuration

The DPA UPScale ST S2 may be paralleled to increase the power capacity up to 400 kW in steps of 10 or 20 kW. A maximum of 20 modules can be paralleled, into four frames.

The following system configurations are available:

DPA UPScale S2	ST40	ST60	ST80	ST120	ST200
Number of modules per frame	2	3	4	6	10
Parallel frames per system	4	4	4	3	2
Max number of modules per system	8	12	16	18	20
Max. total system capacity w/o redundancy	160 kW	240 kW	320 kW	360 kW	400 kW

For a multiple-cabinet system, the following options are necessary:

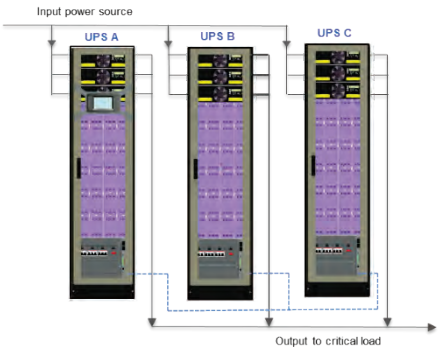

	UPS A	UPS B	UPS C
System graphical display	X	-	-
Parallel interface	X	X	X
Parallel cable	X	X	-

11 Options

The following table shows different optional UPS features and the DPA UPScale ST S2 models to which they apply.

DPA UPScale S2		Frames					Modules	
Option		**ST40**	**ST60**	**ST80**	**ST120**	**ST200**	**M10**	**M20**
System	Backfeed protection	●	●	●	●	●	-	-
Power module	Battery start	-	-	-	-	-	●	●
	Battery charger enhancement	-	-	-	-	-	●	●
	Output short capability 3 x In	-	-	-	-	-	-	●
Control & monitoring	SNMP interface	●	●	●	●	●	-	-
	Modbus TCP/IP	●	●	●	●	●	-	-
	Modbus RS-485	●	●	●	●	●	-	-
	System graphical display	●	●	●	●	●	-	-
	Remote graphical display	●	●	●	●	●	-	-
Wiring	Halogen-free cable	●	●	●	●	●	●	●
Mechanics	Back plinth	●	●	●	●	●	-	-
Battery	Internal battery modules	●	●	-	-	-	-	-
	External battery cabinets	-	-	●	●	●	-	-
	Temperature sensor	●	●	●	●	●	-	-
Configuration	Parallel interface	●	●	●	●	●	-	-
	Parallel cable 5/10/15/20/25 m	●	●	●	●	●	-	-
	Synchronization kit	●	●	●	●	●	-	-

12 External battery cabinets

S-type = For separate battery C-type = For common battery		CBAT-UPScale-120 S-type or C-type	CBAT-UPScale200 S-type or C-type
Battery frames		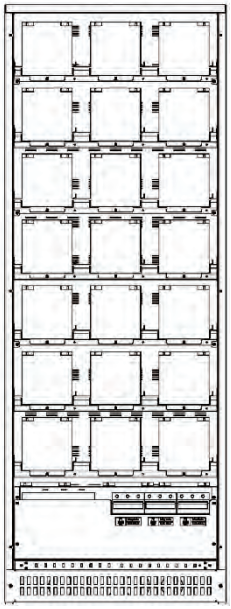	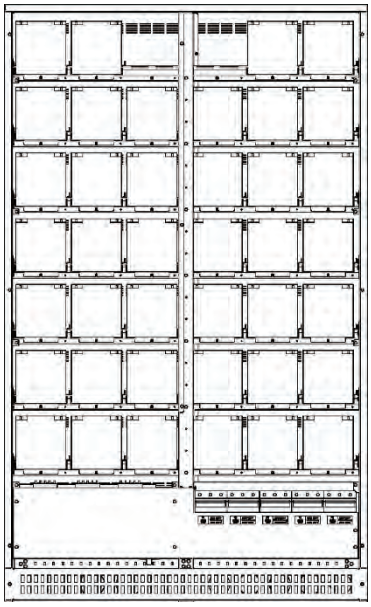
Configuration accommodates:	*Max.*	120 batt. block x 24 Ah/28 Ah on 8 shelves 3 x 5=15 blocks/shelf	200 batt. blocks x 24 Ah/28 Ah on 7 shelves 6 x 5=30 blocks/shelf
Battery fuses / max. batt. strings terminals :	*S-type*	9 / 3 (Terminal 9 x 16/25mm^2)	15 / 5 (Terminal 15 x 16/25mm^2)
Battery fuses / max. batt. strings terminals :	*C-type*	9 / 3 + Com. connection bar 3 x (2x M8) +PE 2xM8	15 / 5 + Com. connection bar 3 x (2x M10) +PE 2x M10
Fuse type (very fast-acting)	*A*	3 x 100 A	5 x 100 A
Dimensions (WxHxD)	*mm*	730 x 1975 x 800	1200 x 1975 x 800
Weight with trays and w/o batteries	*kg*	290	410
Possible battery configurations within the battery cabinets		Battery configurations (1x40)x28Ah / (2x40)x28Ah/ (3x40)x28Ah / (2x50)x28 Ah	Battery configurations (1x40)x28Ah / (2x40)x28Ah/ (3x40)x28Ah / (4x40)x28Ah/ (5x40)x28Ah / (2x50)x28Ah/ (4x50)x28Ah

13 Battery autonomy

13.1 Examples of internal battery autonomy of DPA UPScale S2 ST40 and ST 60

Module type		*UPScale M 10*		*UPScale M 20* Module needs at least 48 blocks for full power or minimum 40 blocks for 16 kW		
Internal separate battery configuration		Battery autonomy in min. per module				
Frame type	Separate battery / module	8 kW	10 kW	12 kW	16 kW	20 kW
UPScale ST 40 max. 80 blocks up to 2 modules	(1 x 40) x 7 Ah / Module	8	6	5		
UPScale ST 40 max. 80 blocks 1 modules ONLY	(1 x50) x 7 Ah / Module	11	8.	7	4	
UPScale ST 60 max. 240 blocks up to 3 modules	(1 x 40) x 7 Ah / Module	8	6	5		
UPScale ST 60 max. 240 blocks up to 3 modules	(2x 40) x 7 Ah / Module	21	15	12	8	5

Internal common battery configuration		Battery autonomy in min. for total system power				
With 1 module	*Module type*	*1 x UPScale M 10*		*1 x UPScale M 20*		
	Total system power	8 kW	10 kW	12 kW	16 kW	20 kW
UPScale ST 40 or UPScale ST 60	1 x (2x 40) x 7 Ah	21	15	12	8	5
UPScale ST 60	2x (1 x50) x 7 Ah	28	21	16	11	8
UPScale ST 60	3 x (1 x 40) x 7 Ah	35	26	21	14	5
UPScale ST 60	3 x (1 x50) x 7 Ah	47	35	28	19	14
UPScale ST 60	4x (1 x50) x 7 Ah	69	52	41	28	21
UPScale ST 60	3 x (2x 40) x 7 Ah	88	66	52	35	5
With 2 modules	*Module type*	*2 x UPScale M 10*		*2 x UPScale M 20*		
	Total system power	16 kW	20 kW	24 kW	32KW	40 kW
UPScale ST 40 or UPScale ST 60	1 x (2x 40) x 7 Ah	8	6	5		
UPScale ST 60	2x (1 x50) x 7 Ah	11	8	7	4	
UPScale ST 60	3 x (1 x 40) x 7 Ah	14	11	8	6	5
UPScale ST 60	3 x (1 x50) x 7 Ah	19	14	11	8	6
UPScale ST 60	4x (1 x50) x 7 Ah	28	21	16	11	8
UPScale ST 60	3 x (2x 40) x 7 Ah	35	26	21	14	5
With 3 modules	*Module Type*	*3 x UPScale M 10*		*3 x UPScale M 20*		
	Total System Power	24 kW	30 kW	36 kW	48 kW	60 kW
UPScale ST 60	2x (1 x50) x 7 Ah	7	5	4		
UPScale ST 60	3 x (1 x 40) x 7 Ah	8	6	5		
UPScale ST 60	2x (2x 40) x 7 Ah	12	9	7	5	4
UPScale ST 60	4x (1 x50) x 7 Ah	16	12	10	7	5
UPScale ST 60	3 x (2x 40) x 7 Ah	21	15	12	8	5

13.2 Examples of external battery autonomy

These configurations are mostly used in combination with the frame DPA UPScale S2 ST 80 or ST 120 or ST 200.

13.2.1 Autonomy table for DPA UPScale ST 80 / 120 / 200 – 10 kW modules

Load power in kW / autonomy in minutes

	5 min.	6 min.	8 min.	10 min.	12 min.	15 min.	20 min.	25 min.	30 min.	40 min.	60 min.
10 kW	n.a.	n.a.	n.a.	n.a.	n.a.	n.a.	n.a.	1x 34x 24Ah	1x 34x 28Ah	1x 42x 28h	2x 34x 24Ah
20 kW	n.a.	n.a.	n.a.	1x 34x 24Ah	1x 34x 28Ah	1x 40x 28Ah	1x50x 28Ah	2x 34x 24Ah	2x 34x 28Ah	2x 42x 28Ah	3 x 38x 28Ah
30 kW	1x 30x 24Ah	1x 30x 24Ah	1x 34x 28Ah	1x 46x 28Ah	1x50x 28Ah	2x 40x 24Ah	2x 40x 28Ah	2x 46x 28Ah	2x50x 28Ah	3 x 46x 28Ah	4x 46x 28Ah
40 kW	1x 34x 28Ah	1x 36x 28Ah	1x 48x 28Ah	2x 34x 24Ah	2x 36x 24Ah	2x 40x 28Ah	2x50x 28Ah	3 x 40x 28Ah	3 x 44x 28Ah	4x 42x 28Ah	n.a.
50 kW	1x 42x 28Ah	1x 48x 28Ah	1x50x 28Ah	2x 36x 28Ah	2x 42x 28Ah	2x 48x 28Ah	3 x 40x 28Ah	4x 38x 28Ah	5x 34x 28Ah	n.a.	n.a.
60 kW	1x 46x 28Ah	1x50x 28Ah	2x 36x 28Ah	2x 42x 28Ah	2x 48x 28Ah	3 x 40x 24Ah	3 x50x 28Ah	2x 44x 28Ah	4x50x 28Ah	n.a.	n.a.
80 kW	2x 34x 28Ah	2x 36x 28Ah	2x 46x 28Ah	3 x 38x 28Ah	3 x 44x 28Ah	3 x50x 28Ah	4x50x 28Ah	n.a.	n.a.	n.a.	n.a.
100 kW	2x 42x 24Ah	2x 48x 28Ah	3 x 40x 28Ah	3 x 46x 28Ah	4x 44x 28Ah	4x 48x 28Ah	n.a.	n.a.	n.a.	n.a.	n.a.
120 kW	2x 48x 28Ah	3 x 40x 24Ah	3 x 46x 28Ah	4x 44x 28Ah	4x50x 28Ah	n.a.	n.a.	n.a.	n.a.	n.a.	n.a.
160 kW	3 x 44x 28Ah	3 x 48x 28Ah	4x 46x 28Ah	4x50x 28Ah	n.a.	n.a.	n.a.	n.a.	n.a.	n.a.	n.a.
200 kW	4x 40x 28Ah	4x 48x 28Ah	n.a.	n.a.	n.a.	n.a.	n.a.	n.a.	n.a.	n.a.	n.a.

Color codes for appropriate battery cabinet:

CBAT-DPA UPSCALE-120

CBAT-DPA UPSCALE-200

13.2.2 Autonomy table for DPA UPScale ST 80 / 120 / 200 – 20 kW modules

Load power in kW / autonomy in minutes

	5 min.	6 min.	8 min.	10 min.	12 min.	15 min.	20 min.	25 min.	30 min.	40 min.	60 min.
20 kW	1x48x24Ah*	1x48x24Ah*	1x48x24Ah*	1x48x24Ah*	1x48x24Ah*	1x48x24Ah*	1x50x28Ah	2x48x24Ah	2x48x24Ah	2x48x24Ah	3x48x24Ah
40 kW	1x48x24Ah*	1x48x24Ah*	1x48x28Ah	2x48x24Ah*	2x48x24Ah*	2x48x24Ah*	2x48x28Ah	3x48x24Ah*	3x48x28Ah	4x48x24Ah	n.a.
60 kW	1x46x28Ah	1x50x28Ah	2x48x24Ah*	2x48x24Ah	2x48x28Ah	3x48x24Ah*	3x50x28Ah	4x48x24Ah	4x50x28Ah	n.a.	n.a.
80 kW	2x48x24Ah*	2x48x24Ah*	2x50x28Ah	3x48x24Ah*	3x48x24Ah	4x48x24Ah*	4x50x28Ah	n.a.	n.a.	n.a.	n.a.
100 kW	2x48x24Ah	2x50x24Ah	3x48x24Ah*	3x48x28Ah*	3x48x28Ah	4x48x28Ah	n.a.	n.a.	n.a.	n.a.	n.a.
120 kW	2x48x28Ah	3x48x24Ah*	3x48x28Ah	3x48x28Ah	4x48x28Ah	n.a.	n.a.	n.a.	n.a.	n.a.	n.a.
160 kW	3x48x28Ah	3x48x28Ah	4x48x28Ah	4x48x28Ah	n.a.	n.a.	n.a.	n.a.	n.a.	n.a.	n.a.
200 kW	4x44x28Ah	4x48x28Ah	n.a.	n.a.	n.a.	n.a.	n.a.	n.a.	n.a.	n.a.	n.a.
240 kW	5x40x28Ah	n.a.	n.a.	n.a.	n.a.	n.a.	n.a.	n.a.	n.a.	n.a.	n.a.

Color codes for appropriate battery cabinet:

CBAT-DPA UPSCALE-120

CBAT-DPA UPSCALE-200

* Battery configuration gives more autonomy than indicated; the battery blocks may be reduced if the UPS is partially loaded. Refer to the product datasheet.

Battery configurations are for example purposes only and calculations are based on an ambient temperature of 20 °C to 25 °C. ABB recommends that the user checks or recalculates configurations according to the battery manufacturer's datasheet.

14 Heat dissipation per module with nonlinear load

Module type		UPScale M10	UPScale M20
Heat dissipation with 100% nonlinear load per module (EN 62040-1-1)	*W*	550	1100
Heat dissipation with 100% nonlinear load per module (EN 62040-1-1)	*BTU/h*	1887	3754
Airflow (25° - 30°C) with 100% nonlinear load per module (EN 62040-1-1)	*m^3/h*	150	150
Dissipation at no load	*W*	120	150

15 Installation planning – UPS positioning

The minimum clearances as described below that are needed to allow proper airflow to the UPS system, and to allow proper service and maintenance, should be respected.

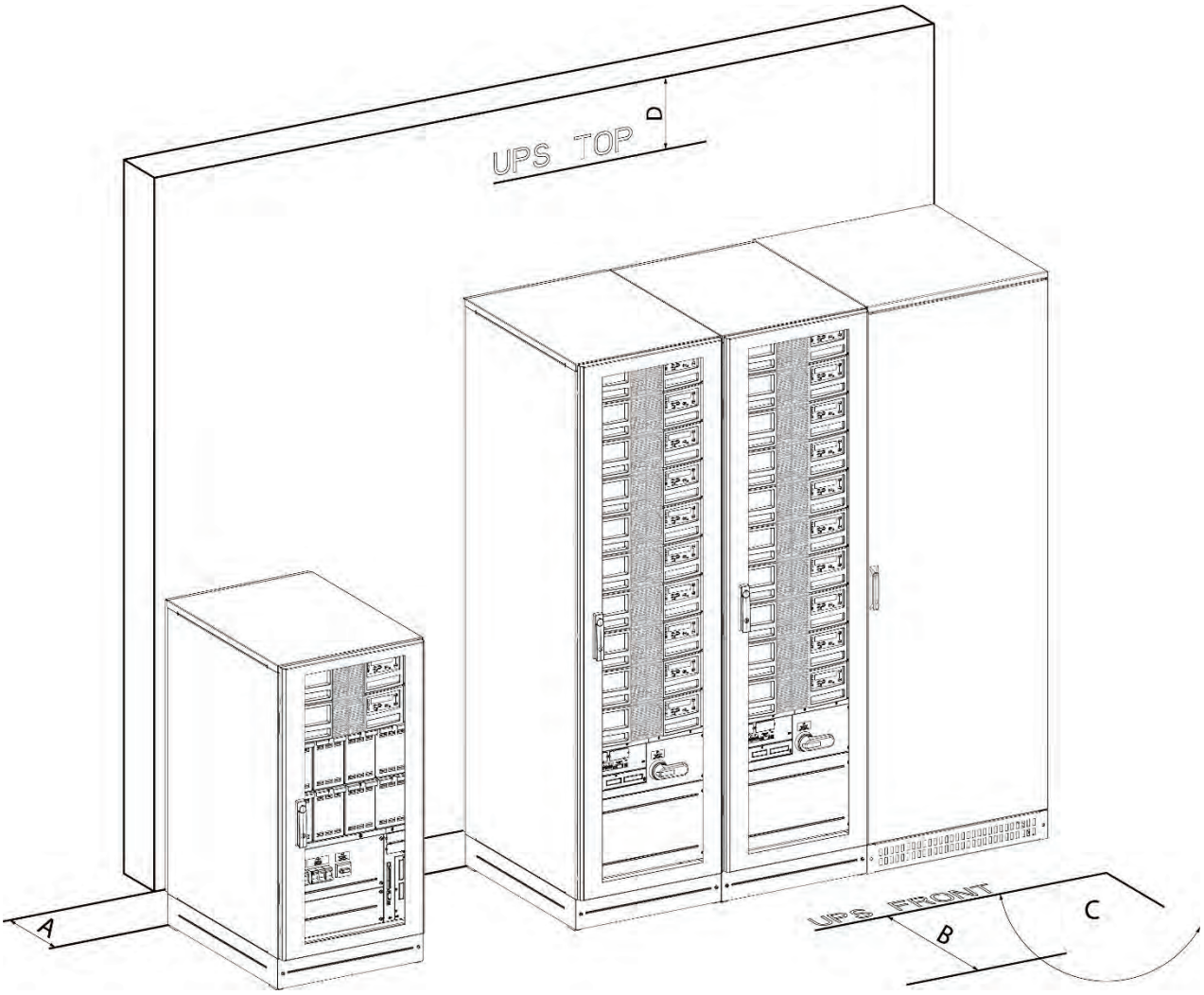

DPA UPScale S2 cabinets		*ST40, ST60, ST80, ST120*	*ST200*	UPS + battery cabinets in row.
A	Back clearance for ventilation (forced air outlet)	200 mm	300 mm	
B	Front clearance needed to allow correct door opening	1000 mm		
C	Maximum door opening angle	115°		
D	Top clearance *(Top clearance is only needed if there is no side clearance)*	400 mm		

16 Wiring and block diagrams for all frames and modules

The customer has to supply the wiring to connect the UPS to the local power source. The installation inspection and initial start-up of the UPS and extra battery cabinet must be carried out by a qualified service personnel such as a licensed service engineer from the manufacturer or from an agent certified by the manufacturer. More details and procedure are mentioned in the user manual.

16.1 Terminal connections overview

Frame type (T) Compression type Terminals (B) Bolted Terminals	**Battery earth** PE	**Separate battery** (+ / N / -)	**Common battery** (+ / N / -)	**Input bypass** 3+N	**Input rectifier** 3+N+PE	**Output load** 3+N+PE
UPScale ST 40	*NOT ALLOWED*			*4 x 16/25 mm² (T)*	*5 x 16/25 mm² (T)*	
UPScale ST 60				*4 x 35 mm² (T)*	*4 x 35 mm² (T)* *+ PE 50 mm² (T)*	
UPScale ST 80	*50mm² (T)*	*4x* *(3 x 10/16mm²) (T)*	*3 x M6 (B)*	*3 x 50mm² (T)* *+ N 50mm² (T)*	*3 x 50mm² (T)* *+ N 50mm² (T)* *+ PE 50 mm² (T)*	
UPScale ST 120	*1xM10 (B)*	*6x* *(3 x 10/16mm²) (T)*	*3 x 2xM5 (B) or* *3 x M10 (B)*	*4 x 95mm² (T)*	*4 x 95mm² (T)* *+ PE M10 (T)*	
UPScale ST 200	*1x M10* *(B)*	*5x* *(3 x 35mm²) (T)* *2 modules have common battery*	*2x (3x M10) (B)*	*3x M12 (B)* *+ PE 1x M12*	*4x M12 (B)* *+ PE 1x M12*	

16.2 Terminal connections

UPScale ST 40 & ST 60

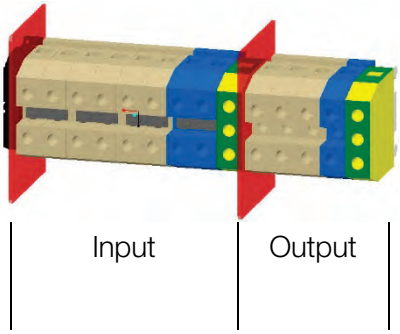

UPScale ST 80

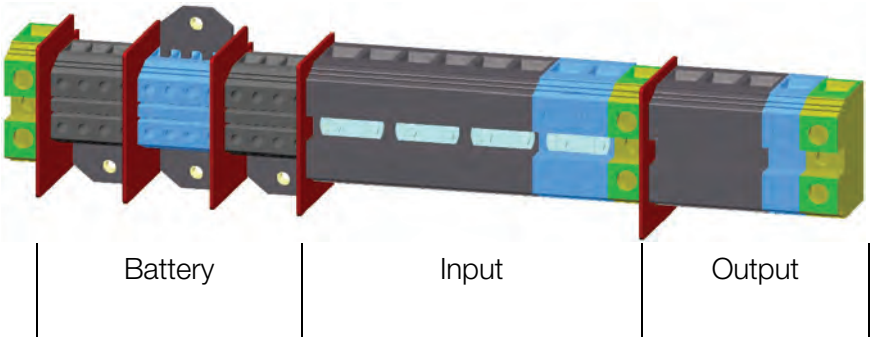

UPScale ST 120

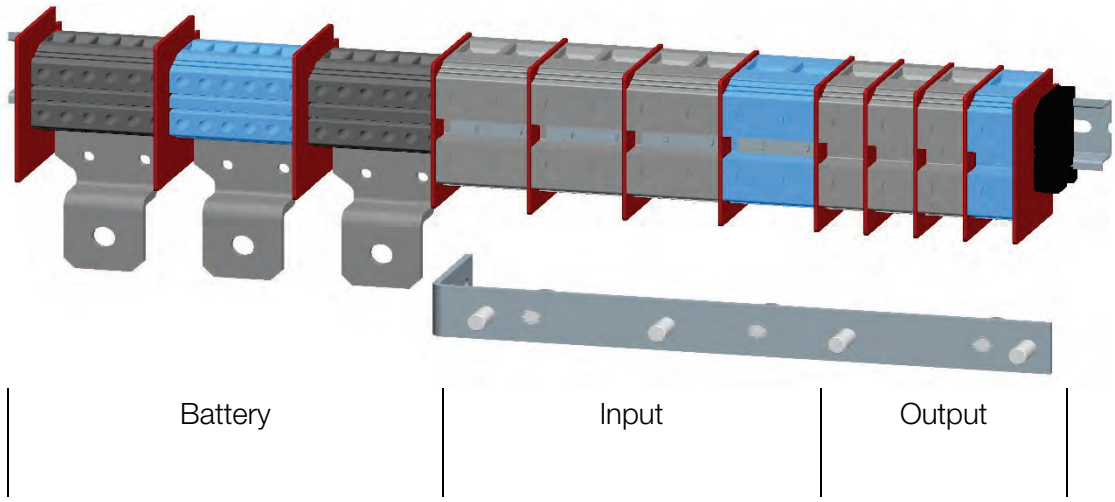

UPScale ST 200

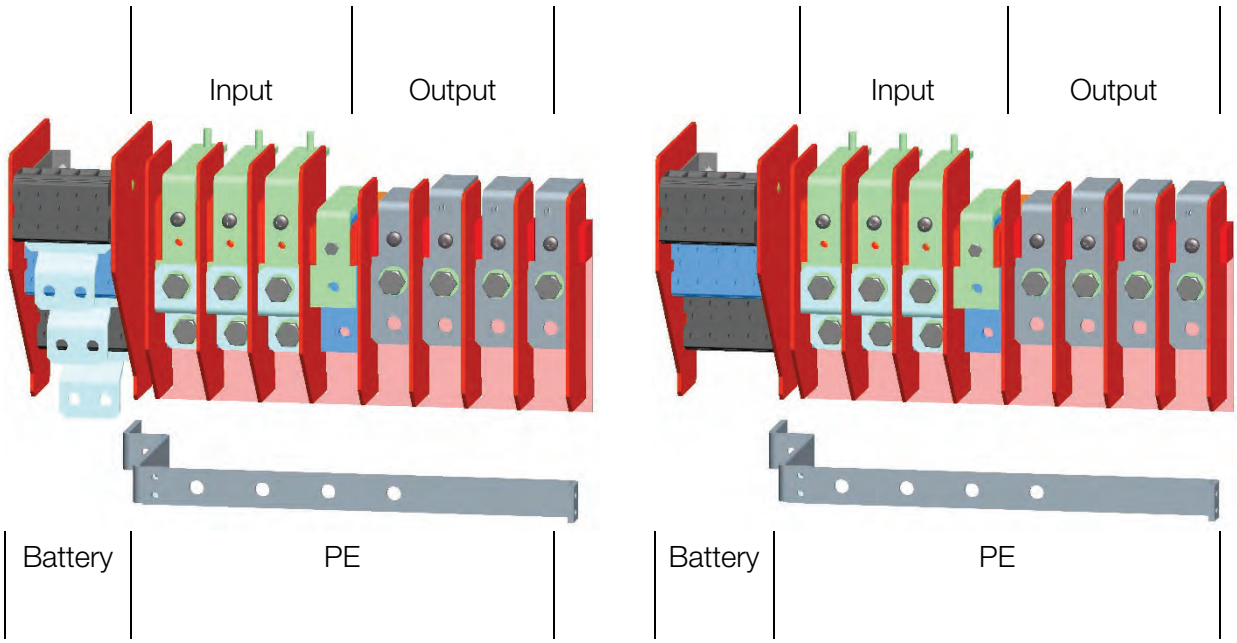

16.3 Single input feed (standard version)

16.3.1 Block diagram

Cable sections and fuse ratings recommended. Alternatively, local standards to be respected.

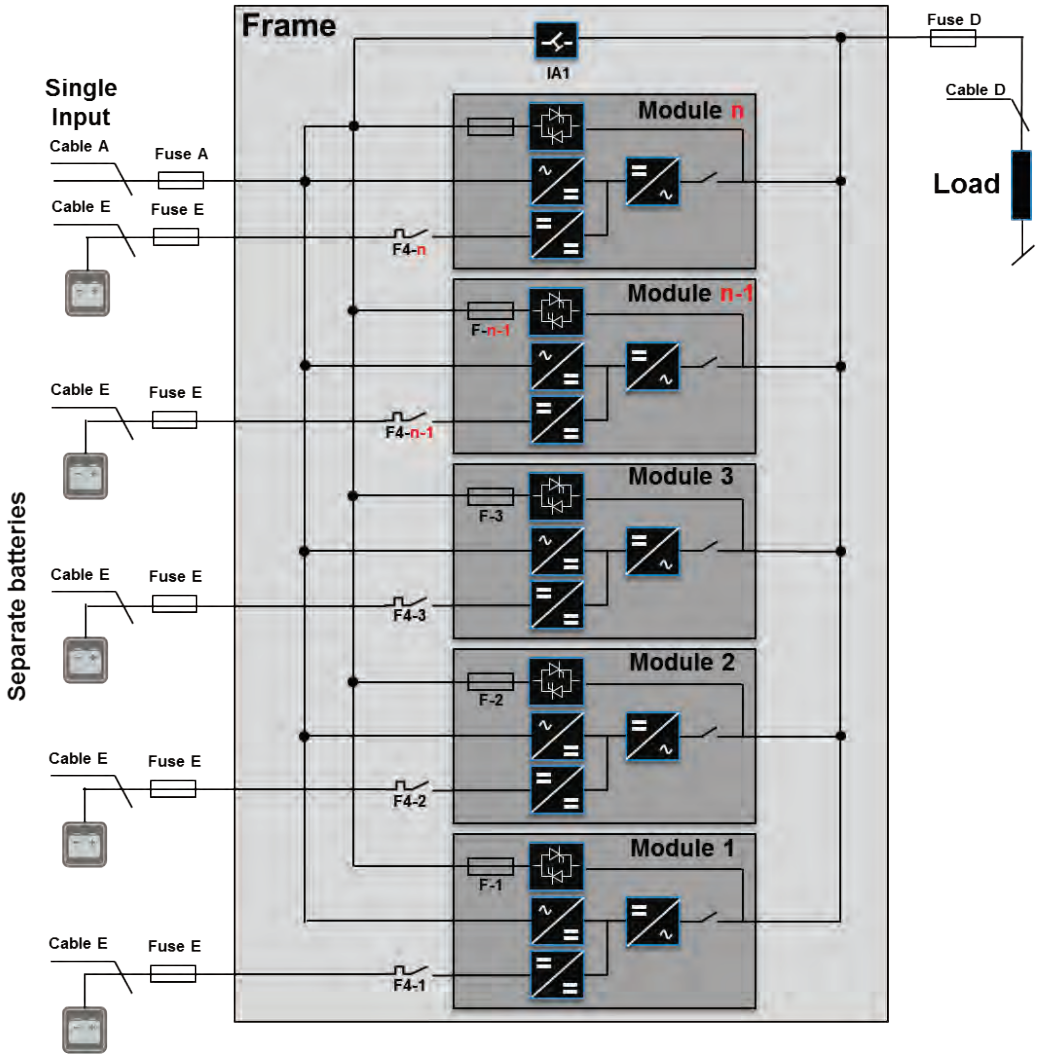

16.3.2 Cable sections

Frame type	Load in kW	Input 3 x 400 V/230 V			Output 3 x 400 V/230 V @ cosphi 1.0		Battery		
		Fuse A (Agl/CB)	Cable A (mm²) (IEC 60950-1)	Max. input current with battery charging [A]	Cable D (mm²) (IEC 60950-1)	I nom [A]	Fuse E + / N / - (Agl/CB)	Cable E (mm²) for CBAT UPScale 120 or 200 ONLY + / N / -	
								Com. battery	Sep. Battery
UPScale ST 40	40	3 x 80 A	5 x 16	68 A	5 x 16	58 A	NOT ALLOWED		
UPScale ST 60	60	3 x 125 A	5 x 35	102 A	5 x 35	87 A			
UPScale ST 80	80	3 x 160 A	5 x 50	136 A	5 x 50	116 A	3 x 224 A*1	3 x 95 *1	4x(3x10)
UPScale ST120	120	3 x 224 A	4 x 95+1 x 50 (PE)	208 A	5 x 70	174 A	3 x 300 A*1	3 x 150 *1	6x(3x10)
UPScale ST 200	200	3 x 350 A	5 x 185	333 A	5 x 185	290 A	3 x 450 A *1	3x(2x95)*1	5x(3x25)

*1 only valid for common battery use

16.4 Dual input feed (optional version)

16.4.1 Block diagram

Cable sections and fuse ratings recommended. Alternatively, local standards to be respected

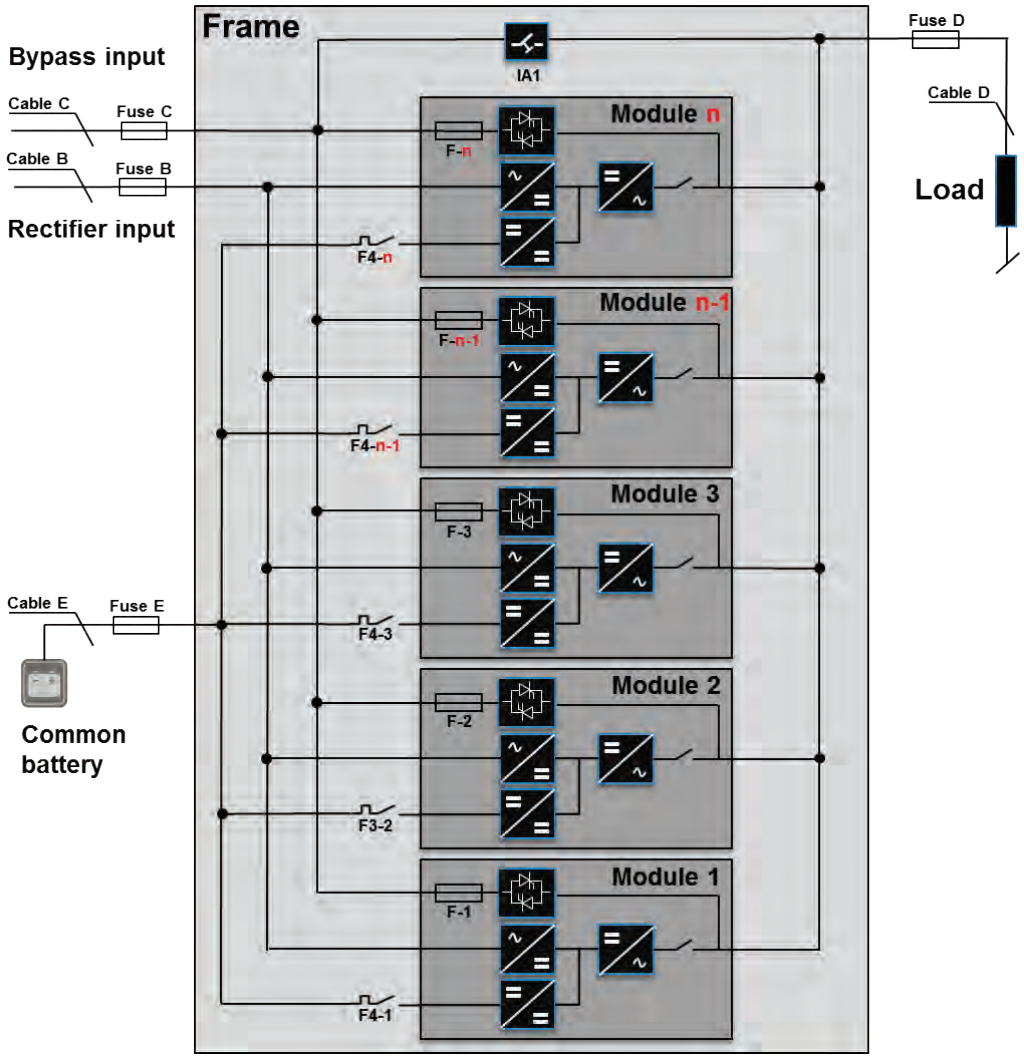

16.4.2 Cable sections

Frame type UPScale ST	Load in kW	Input 3 x 400 V/230 V			Bypass 3 x 400 V/230 V		Output 3 x 400 V/230 V @ cosphi 1.0		Battery		
		Fuse B (Agl/CB)	Cable B (mm²) (IEC 60950-1)	Max. input current with battery charging [A]	Fuse C (Agl/CB)	Cable C (mm²) (IEC 60950-1)	Cable D (mm²) (IEC 60950-1)	I nom [A]	Fuse E +/N/- (Agl/CB)	Cable E (mm²) for CBAT UPScale 120 or 200 ONLY + / N / -	
										Com. battery	Sep. battery
40	40	3 x 80 A	5 x 16	68 A	3 x 80A	4 x 16	5 x 16	58 A	NOT ALLOWED		
60	60	3 x 125 A	5 x 35	102 A	3 x 125A	4 x 35	5 x 35	87 A			
80	80	3 x 160 A	5 x 50	136 A	3 x 160A	4 x 50	5 x 50	116 A	3 x 224 A*1	3 x 95 *1	4 x (3 x 10)
120	120	3 x 224 A	4 x 95+1 x 50 (PE)	208 A	3 x 224A	4 x 95	5 x 70	174 A	3 x 300 A*1	3 x 150 *1	6 x (3 x 10)
200	200	3 x 350 A	5 x 185	333 A	3 x 350 A	4 x 185	5 x 185	290 A	3 x 450 A*1	3x(2x95)*1	5 x (3 x 25)

*1 only valid for common battery use

Contact us

www.abb.com/ups
ups.sales@ch.abb.com

Power and productivity
for a better world™