OPERATING MANUAL

DELPHYS BC

FROM 160 TO 300 kVA

EN

www.socomec.com

socomec
Innovative Power Solutions

EN

TABLE OF CONTENTS

1. WARRANTY CERTIFICATE 4

2. FOREWORD 5

3. GENERAL 6

3.1. Scope 6

3.2. Purpose And Ups Composition 6

3.3. Safety 7

3.4. Power Supply Inputs 7

4. MODES OF OPERATION 8

4.1. On line operations 8

4.2. Operation with manual maintenance bypass 8

4.3. Operation with external manual maintenance bypass (optional) 9

4.4. Operation in g.e. configuration 9

4.5. Specific mode single units with bypass 9

4.6. Specific mode modular systems 10

5. MIMIC PANEL 11

6. DISPLAY OPERATION 12

6.1. Display description 12

6.2. Menu architecture 13

6.3. Functioning mode 15

6.4. Status 15

6.5. Alarms management 16

6.6. Synoptic animation 17

6.7. Event log page 20

6.8. Menu function descriptions 21

6.9. Additional user functions 23

7. OPERATING PROCEDURES 24

7.1. Switching ON 24

7.2. Bypass operations 24

8. OPERATING MODES 25

8.1. On line mode 25

8.2. High efficiency mode 25

8.3. Converter mode 26

8.4. Operation with maintenance bypass 26

8.5. Operation with motor generator (genset) 26

9. STANDARD FEATURES AND OPTION 27

9.1. ADC+SL card 27

9.2. Net Vision card 29

9.3. ACS card 29

9.4. Modbus TCP card 29

9.5. BACnet card 29

9.6. Remote touchscreen display 30

9.7. Software option 30

10. MULTILEVEL COMMUNICATION 31

10.1. Isolation controller 31

10.2. External maintenance bypass 31

10.3. Adc card 31

11. TROUBLESHOOTING 32

11.1. Delphys BC unit alarms 32

11.2. Delphys BC parallels system alarms 33

11.3. Preventive maintenance 35

1. WARRANTY CERTIFICATE

The warranty terms and conditions are stipulated in the offer, by default the following clauses apply.

The SOCOMEC warranty is strictly limited to the product(s) and does not extend to equipment which may be integrated with this/these product(s), nor the performance of such equipment.

The manufacturer guarantees its products to be free from manufacturing faults and defects in design, material or workmanship, subject to the limits set forth below.

The manufacturer reserves the right to modify the delivery with a view to fulfilling these guarantees or to replace defective parts. The manufacturer's warranty does not apply in the following cases:

- fault or defect in the design of parts added or supplied by the customer
- fault due to unforeseen circumstances or force majeure
- replacement or repair resulting from normal wear and tear of the modules or machinery
- damage caused by negligence, lack of proper maintenance or misuse of the products
- repair, modification, adjustment or replacement of parts undertaken by unqualified third parties or personnel without the express consent of SOCOMEC .

The warranty period is twelve months commencing from the date of delivery of the product.

The repair, replacement or modification of the parts during the warranty period does not imply or justify any extension of the warranty beyond the original period.

In order to establish a valid warranty claim, the purchaser must notify the manufacturer in writing immediately after the discovery of any apparent material defects and provide any and all supporting evidence of the defects at the latest within eight days before the date of expiry of the warranty.

Defective parts which have been returned and replaced free of charge shall become the property of SOCOMEC .

The warranty is void if the purchaser has undertaken modifications or repairs on the devices on his or her own initiative and without the express consent of the manufacturer.

The manufacturer's responsibility is strictly limited to the obligations defined in this warranty (repair and replacement) excluding any other right to claim compensation or indemnity.

Any import tax, duty, fee or charge of any nature whatsoever imposed by European regulations or those of an importing country or of a transit country shall be paid by the purchaser.

2. FOREWORD

We thank you for the trust you have in our Uninterruptible Power Systems DELPHYS BC.

This equipment is fitted with up to date technology. Rectifier and inverter subsets are provided with power semiconductors (IGBT) including a digital micro-controller.

Our equipment complies with standard IEC EN 62040-2 and 62040-1.

“This is a product for restricted sales distribution to informed partners. Installation restrictions or additional measures may be needed to prevent disturbances”.

SAFETY REQUIREMENTS

Using conditions:

Do read carefully these operation instructions before using the UPS and comply with the safety notes mentioned.

Whatever the repairs, they must be made only by authorised staff, who have been suitably trained. It is recommended that the ambient temperature and humidity of the UPS environment are maintained below the values specified by the manufacturer.

This equipment meets the requirements of the European directives applied to this product. As a consequence it is labelled as follows:

This equipment conforms to AS standards and bears the approval mark:

(E2376)

REGULATIONS CONCERNED WITH ENVIRONMENTAL ISSUES

Recycling of electrical products and equipment

Provision is made in European countries to break up and recycle materials making up the system. The various components must be disposed of in accordance with the legal provisions in force in the country where the system is installed.

Battery wastes

Used batteries are considered as toxic wastes. It is therefore essential to entrust them solely and exclusively to firms specialised in their recycling. They can not be treated with other industrial or household wastes, as set out in local regulations in force.

3. GENERAL

3.1. Scope

This document provides required information for operating Delphys BC systems. It describes the facilities offered on the control panels:

- Scrolling through the menus displayed
- Load transfer onto the automatic and/or maintenance bypass
- System start up or shutdown

The operating instructions refer to the most frequently used configurations, i.e.:

- Single UPS's with bypass
- Modular systems

3.2. Purpose And Ups Composition

UPS provide:

- very low distortion and high power factor to the upstream power supply,
- voltage and frequency stability as well as continuity of supply to downstream loads –whatever the outages or disturbances on the upstream power supply-.

The system is fitted with double conversion VFI-SS-111 technology.

When the input power supply is present, the UPS acts as a stabilizer. In the event of a utility outage, it acts as a source of electrical power. In such case, the required power is supplied by the battery, which is kept charged when the mains is present.

UPS provide three-phase sinusoidal output. The UPS is composed of:

- 1 three-phase Power Factor Correction (PFC) rectifier, based on 3 levels topology,
- 1 three-phase inverter, based on 3 levels topology,
- 1 static bypass to transfer the load automatically and without interruption to the bypass supply.
- 1 maintenance bypass, which allows a seamless load transfer to the mains during maintenance operations,
- 1 battery,
- 1 DC/DC converter to manage battery (charge/discharge),
- 1 control panel made up of a mimic panel, an 8-line display and an intuitive user interface.

3.3. Safety

CAUTION

The equipment can only be switched on or used if the following conditions are fulfilled:

- electrical connections comply with the regulation in force (earth bonding, appropriate protections and cross-section of cables)
- all means to comply with the protection index of the system are in place, such as side panels, doors, glands, shields or whatever....

ADVICE

- Carefully follow the instructions described in this manual.
- All operations must only be carried out by personnel who are suitably trained and with authorized access to restricted areas.

CAUTION

Do not forget that even when the load is stopped the unit is live:

- because of the mains voltage, the rectifier and the bypass.
- because of the voltage generated by the battery and by the rectifier.
- because of the load voltage when the maintenance bypass Q5 is closed and the bypass mains is present.

DANGER

Any operation inside the cabinets is to be completed:

- once the UPS is stopped and no longer live
- after 5 minutes, the time for the capacitors upstream of the rectifier and inverter to discharge.

The residual voltage of the capacitors may still cause heavy electrical arcs after 5 minutes.

Before closing the battery protection, be sure that the rectifier is started !

HAZARD INDICATION

While the UPS is operating, this label indicates that the parts are live and therefore the risk of electrical hazard.

All operations behind protection panels must only be carried out by personnel who are suitably trained.

3.4. Power Supply Inputs

Three power supply inputs are needed to operate the system:

- voltage on input 1 for the supply to the rectifier,
- voltage on input 2 for the supply to the automatic bypass (depending on the system, inputs 1 and 2 can be common),
- the DC voltage for the battery (about 500Vdc).

4. MODES OF OPERATION

4.1. On line operations

ON LINE operation consists of double conversion operation in conjunction with mains absorption with very low distortion and a power factor at 1.

This enables UPS to supply a voltage that is fully stabilised in frequency and amplitude, regardless of any interference in the mains power supply.

ON LINE operation provides three operating modes according to mains and load conditions:

"Normal" mode.

This is the most frequent operating condition: the energy is drawn from the primary mains power supply and is converted and used by the inverter to generate the output voltage to power the loads connected.

The inverter is constantly synchronised with the auxiliary mains to enable load transfer (due to an overcurrent or inverter shutdown) without any break in the power supply to the load.

The battery charger supplies the energy required to maintain or recharge the battery.

"Bypass" mode.

In case of inverter failure, the load is automatically transferred onto the auxiliary mains without any interruption in the power supply. This procedure may occur in the following situations:

- in the event of a temporary overload, the inverter continues to power the load. If the condition persists, UPS output is switched onto the auxiliary mains via the automatic bypass. Normal operation, which is from inverter, returns automatically a few seconds after the overload disappears.
- when the voltage generated by the inverter goes is out of tolerances due to a major overload or a fault on the inverter.
- when the internal temperature exceeds the maximum value allowed.

"Battery" mode.

In the event of a mains failure (micro interruptions or extended black-outs), UPS continues to power the load using the energy stored in the battery. The Expert Battery System keeps the user constantly informed on the battery status and on the remaining back-up time adapted permanently according to the battery capacity and the load rate.

4.2. Operation with manual maintenance bypass

If the manual maintenance bypass is activated (with the appropriate procedure), the load is powered directly from the auxiliary mains, while UPS is in fact excluded from the power supply and can be switched off.

This operating mode is useful when maintenance needs to be carried out on UPS since service personnel can work on the installation without having to cut off the power supply to the load.

4.3. Operation with external manual maintenance bypass (optional)

The external manual maintenance bypass may be placed on the general distribution panel when Delphys BC is installed, or by installing the bypass panel that is supplied on request.

The Q4 disconnector must be connected to the auxiliary mains input and the mains input must be isolated on the panel.

If the manual maintenance bypass is activated (with the appropriate procedure), the load is powered directly from the auxiliary mains, while UPS is in fact excluded from the power supply and can be switched off.

This operating mode is useful when maintenance needs to be carried out on UPS since service personnel can work on the installation without having to cut off the power supply to the load.

4.4. Operation in g.e. configuration.

With a generator, the frequency and voltage ranges of the auxiliary mains can be increased to accept the instability of the GE and at the same time to avoid operation from the battery or risks of out-of-synchronisation switching onto the bypass.

4.5. Specific mode single units with bypass

4.5.1. Standard Basic Schemes

Separated rectifier and bypass inputs

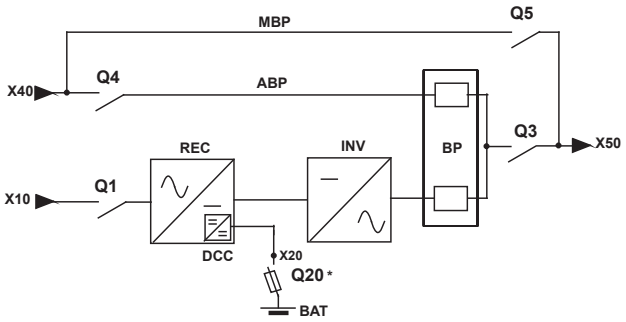

Common rectifier and bypass input

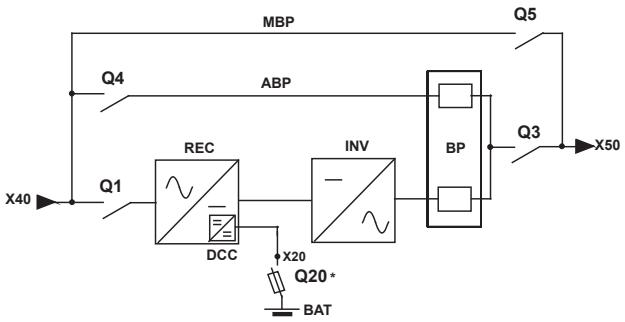

X10 = rectifier input
X40 = bypass input
X50 = to the load
ABP = automatic bypass
MBP = maintenance bypass

BP = bypass facility
REC = rectifier
INV = inverter
DCC = battery charger converter
* other protection upon request.

NOTE: in any case, see the technical details of the drawing on the inner side of the UPS door.

4.5.2. Eco Mode operation (optional)

When the auxiliary mains quality is good enough, Eco Mode operation provides the supply to the load directly by the auxiliary mains to optimize the operating costs of the installation. The online double conversion chain is put on Standby while ensuring the recharge of the batteries.

In case of auxiliary mains power cut, the load is transferred to the online double conversion chain and operation is similar to On Line mode battery.

If the quality of the auxiliary mains is outside the acceptable range for the load, the latter is transferred to the online double conversion chain and operation is similar to online normal mode.

When the auxiliary mains finds a sufficient quality in a sustainable way, the load is automatically transferred back to auxiliary mains.

4.6. Specific mode modular systems

4.6.1. Standard Basic Schemes

TWO NON REDUNDANT UPS UNITS (N)

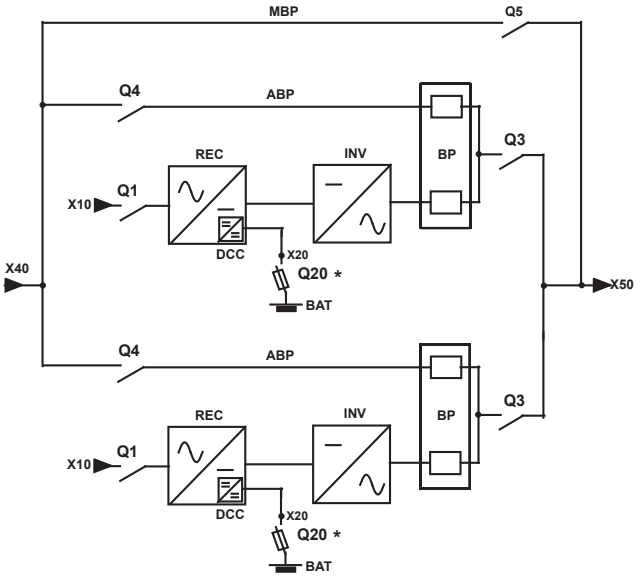

THREE UPS UNITS OR MORE (N OR N+1)

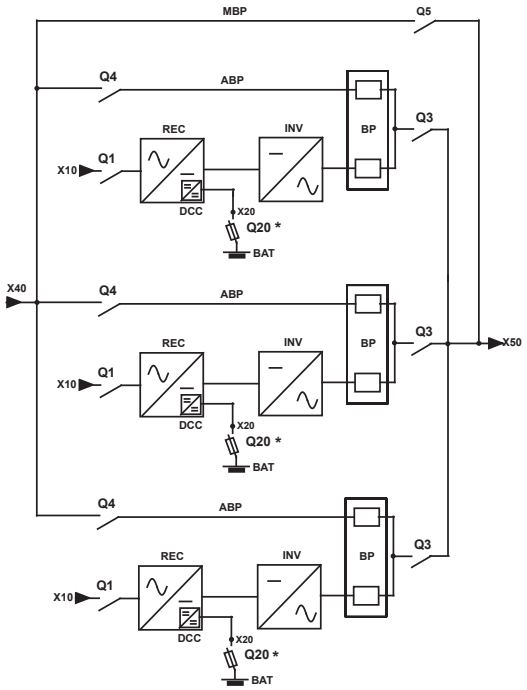

NOTE: in such 2 configurations, the system is fitted with an EXTERNAL maintenance bypass.

TWO REDUNDANT UPS UNITS (1+1)

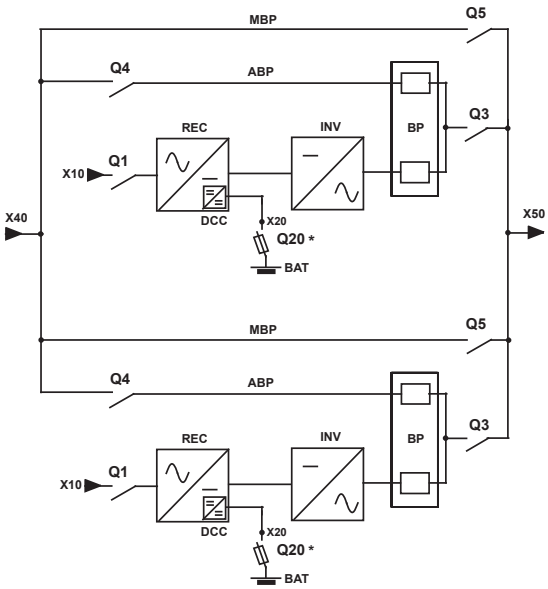

X10: rectifier input
X40: bypass input
X50: to the load
X20: battery connection
REC: rectifier
INV: inverter
BAT: battery
DCC: battery charger converter
BP: bypass facility
ABP: automatic bypass
MBP: maintenance bypass

NOTE: in such a configuration each UPS unit has its own maintenance bypass.

* other protection upon request.

NOTE: in any case, see the technical details of the drawing on the inner side of the UPS door.

5. MIMIC PANEL

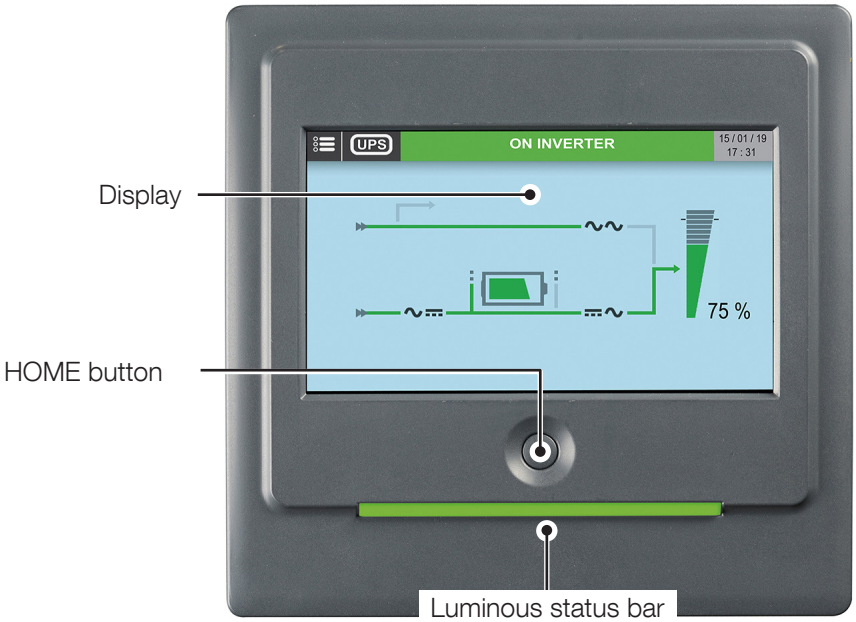

Control panel with LED status bar indicator	
Colour	Description
Flashing red-yellow-green-red	No communication. The data is no longer updated or not present. Load status cannot be given.
Flashing red	Load supplied, but the output will stop in few minutes.
Red	Load not supplied: Output switched OFF due to an alarm.
Flashing yellow-red	Load supplied, but no longer protected. A critical alarm occurs.
Flashing yellow	Maintenance requested / or service mode in progress.
Yellow	Load supplied with warning.
Flashing green-yellow-green	Load supplied and preventive alarm present.
Flashing green	Load going to be supplied, battery test in progress or UPS auto-test running.
Green	Load protected by inverter or UPS in eco mode.
Grey (OFF)	Load not supplied: output on standby / isolated / OFF.

Only two elements are necessary to interact with the unit:

- HOME button: is a mono-stable button used to interact manually with the display especially in emergency situations. Logic behind the interaction is:
  - Single pressing (below 3 sec): HOME page return of graphic display
  - 3 sec < time < 6 sec: change the language to the default (English)
  - 6 sec < time < 8/9 sec: go to the calibration screen automatically
  - Above 8/9 sec: implement the hw reset of the micro controller and restart of the graphic
- Display: is the main active matrix of the display sensitive to touch pressure. The display is designed for rugged industrial applications. The display is single-touch only (no double touch effects). Depending on pressure, the navigation tree and various functions will be executed.

Two special functions are present on the control panel:

- Standby screen: for safety reasons, after a programmable amount of time, the display goes on standby. Display goes to the main screen and touch screen sensitivity is disabled. A label on the bottom of the main screen displays this status. To exit this status press the screen for the HOME button.
- OFF status: for power consumption and life enhancement, after a programmable amount of time display goes in “off”. Display goes black and no interaction is possible. Touching the HOME button or screen resumes normal operations.

Handle the control panel with care. It is made of metal, glass and plastic and contains delicate electronic components. The control panel may be damaged if dropped, pierced or broken or comes into contact with liquids. Do not use the control panel with a cracked screen, as it may cause injury.

6. DISPLAY OPERATION

6.1. Display description

- Stand alone UPS or unit view

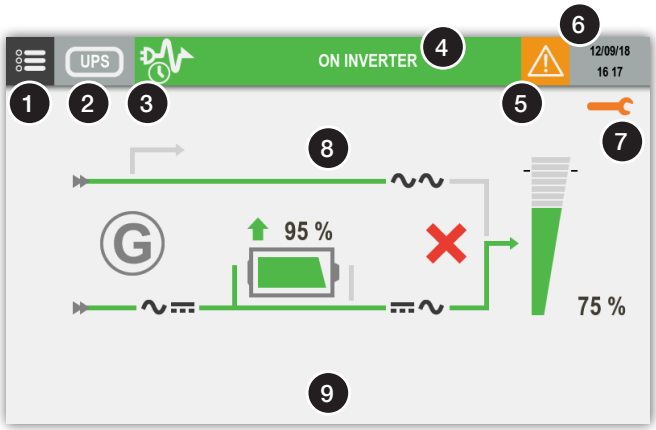

- UPS parallel system: System view

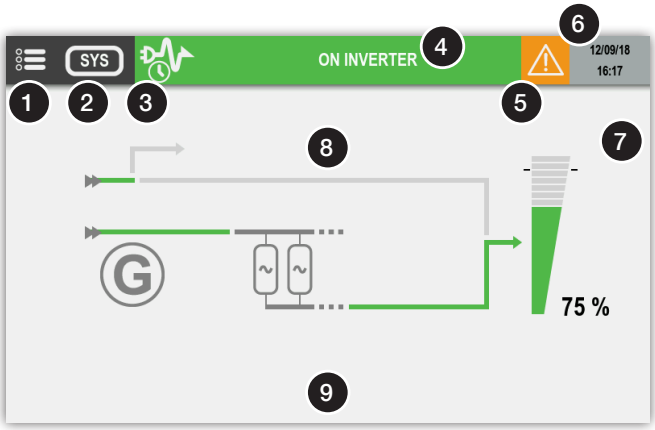

- UPS parallel system: Units overview

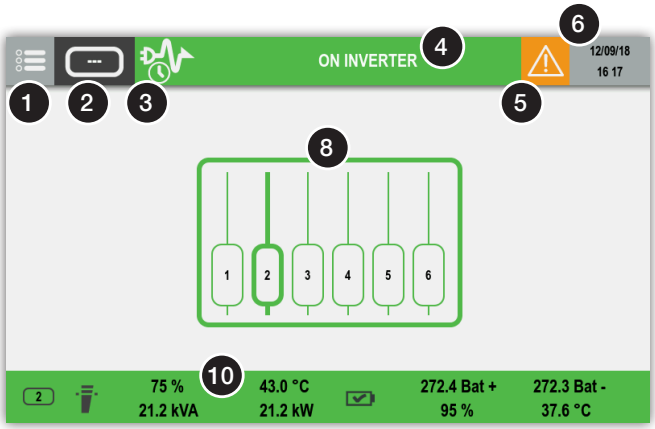

1. Menu access
2. Device reference
3. Functioning mode (see 'Functioning mode' chapter)
4. Status displaying / Status page access
5. Alarm present – access to alarm page
   "Alarms" icon appears in case of preventive/ critical alarm. A dedicated pop-up appears and can be cleared.
6. Clock
7. Maintenance alert
8. Synoptic area
9. Help message area
   "Press Key to wake up" appears when the display goes on standby. Touch the display to wake it up.
10. Measures report

6.2. Menu architecture

	MENU ITEMS		
	Stand alone UPS [UPS]	Unit [1] to [8]	UPS System [SYS]
MONITORING			
▶ ALARMS	•	•	•
▶ STATUS	•	•	•
▶ SYNOPTIC	•		
▶ UNIT		•	•
▶ SYSTEM		•	•
▶ UNITS OVERVIEW		•	•
EVENTS LOG	•	•	•
MEASUREMENTS			
▶ OUTPUT MEASUREMENTS	•	•	•
▶ BATTERY MEASUREMENTS	^	^	^
▶ INPUT MEASUREMENTS	•	•	•
▶ INVERTER MEASUREMENTS	•	•	
▶ BYPASS MEASUREMENTS	^	^	^
CONTROLS			
▶ UPS PROCEDURE			
▶ START	•1		•1
▶ ON MAINTENANCE BYPASS	•1		•1
▶ TRANSFER			
▶ TRANSFER ON INVERTER	•		•
▶ TRANSFER ON BYPASS	•		•
▶ MODE			
▶ ECO MODE CONTROLS			
▶ Eco Mode ON	^		^
▶ Eco Mode OFF	^		^
▶ ECO MODE SCHEDULE	^		^
▶ ENERGY SAVER CONTROLS			
▶ Energy Saver ON			^
▶ Energy Saver OFF			^
▶ BATTERY			
▶ BATTERY CONTROL			
▶ BATTERY TEST	^	^	^
▶ DISCHARGE TO INPUT ON	^^	^^	
▶ DISCHARGE TO INPUT OFF	^^	^^	
▶ BATTERY SCHEDULE	^	^	^

[1] displayed depending on state
^ If battery present
^^ if BCR function enable

	MENU ITEMS		
	Stand alone UPS [UPS]	Unit [1] to [8]	UPS System [SYS]
▶ SUBSET			
▶ MAKE UNIT AVAILABLE	•	•	•
▶ RECTIFIER ON	•	•	
▶ RECTIFIER OFF	•	•	
▶ INVERTER ON	•	•	
▶ INVERTER OFF	•	•	
▶ LOAD OFF	•	•	
▶ MAINTENANCE			
▶ Alarms reset	•	•	•
▶ LED test	•	•	•
CONFIGURATIONS	•		•
▶ CLOCK	•		•
▶ COM-SLOTS			
▶ COM-Slot 1	•	•	
▶ COM-Slot 2	•	•	
▶ REFERENCE			
▶ SOCOMEC REFERENCE	•	•	•
▶ SERIAL NUMBER	•	•	•
▶ User Reference	•	•	
▶ Location	•	•	
▶ REMOTE			
▶ Remote ON	•		•
▶ Remote OFF	•		•
USER PARAMETERS			
▶ LANGUAGE	•		•
▶ PASSWORD	•		•
▶ BUZZER	•		•
▶ DISPLAY	•		•
▶ PREFERENCES	•		•
▶ ADC+SL CONFIG	•	•	
▶ TOUCHSCREEN	•	•	•
SERVICE			
▶ SERVICE REPORT	•	•	
▶ FIRMWARE VERSIONS	•	•	
▶ NETWORK PARAMERS (Only for service)	•	•	
▶ MAINTENANCE CODE	•	•	

6.3. Functioning mode

Service

Isolated

Eco mode scheduling active

Eco Mode active

Standby active

Energy saver active

Autotest

6.4. Status

6.4.1. Status page

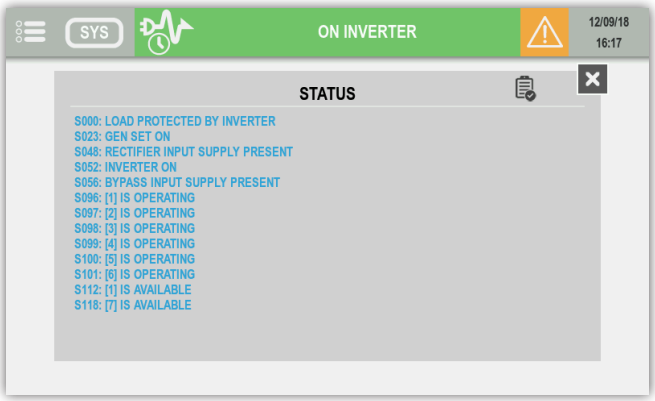

Filtering

List all active status

List all status

List all status not active

6.5. Alarms management

6.5.1. Alarm report

The alarm icon is present if at least one alarm is present.

Tap on the icon to open the alarm list.

6.5.2. Alarm popup

In case of critical alarm a popup message appears and the buzzer is running according its settings.

The highest priority alarm is displayed.

Tap on valid button to stop the buzzer and to close the popup message. The alarm page is automatically display after this action.

6.5.3. Alarm page

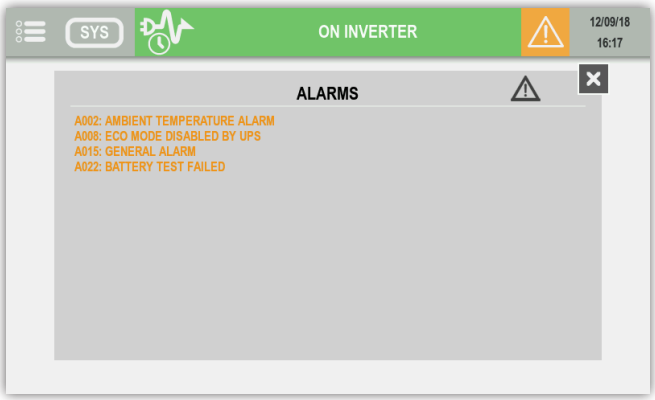

Filtering

List all active alarms

List all active preventive alarms

List all active critical alarms

Popup alarm for preventive alarm

In USER PARAMETERS menu, USER PREFERENCES item gives the possibility to enable popup alarm also with preventive alarms.

6.6. Synoptic animation

- Stand alone UPS or unit view

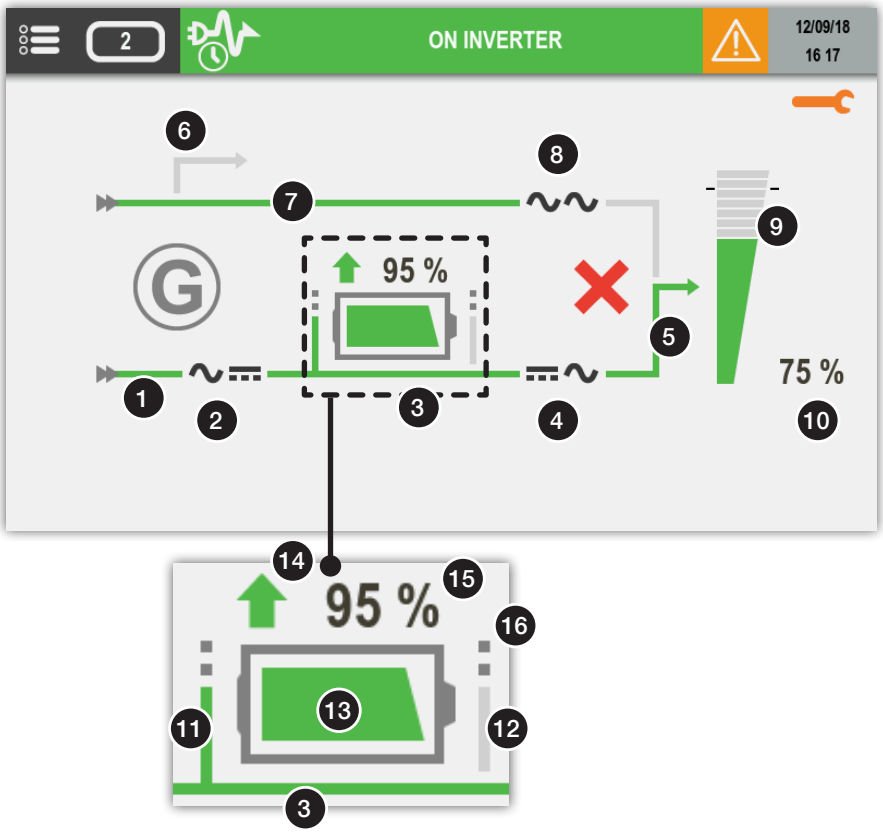

6 7 8 not present for unit view in UPS System with common Bypass

- UPS parallel system: System view

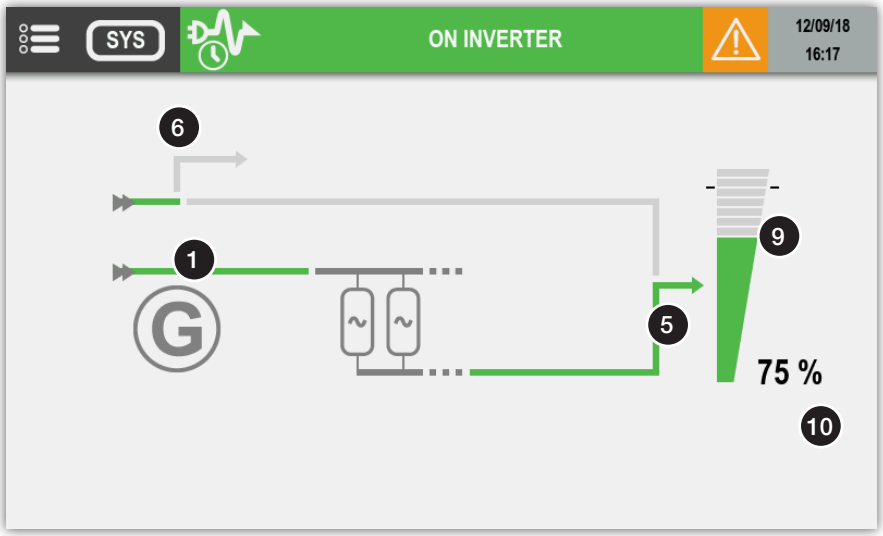

Item	Description	Rules of animation				Touch actions
		Grey	Green	Yellow	Red	
1	Rectifier input supply	Not present	Present	Battery test to input	-	-
2	Rectifier status	Normal status	-	Preventive alarm	Critical alarm	Access to input measurements page
3	DC voltage bus	DC voltage absent	DC voltage presence	-	-	-
4	Inverter status	Normal status	-	Preventive alarm	Critical alarm	Access to inverter measurements page
5	Inverter output	Inverter OFF	Inverter ON	Inverter on battery	-	-
6	Maintenance bypass *	MBP present	-	Load on maintenance bypass	-	-
7	Bypass input *	Not present	Present	Out of tolerance	-	-
8	Bypass status *	Normal status	-	Preventive alarm	Critical alarm	Access to bypass page
9	Load rate symbol	No load	Fill-up to 95%	Fill-up to 110%	Fill-up over 110%	Access to output measurements pages
10	Load rate value	Instantaneous value. displayed if value > 0				-
11	DC battery input **	DC voltage absent	DC voltage presence	BCR function running	-	-
12	DC battery output **	DC voltage absent	DC voltage presence	Inverter on battery		-
13	Battery indicator **	-	Fill-up to 100%	Fill-up to 45%	Fill-up to 15%	Access to bat. measurements page
14	Battery charging / discharging **	-	Battery charging	Battery discharging	-	-
15	Battery level or remaining backup time during battery discharge **	Instantaneous value. displayed if value > 0 The backup time is no more displayed if it is below two minutes.				-

* Element disappears if Bypass not present
** Not present if batteries are not present

- Battery animation

Battery status	DESCRIPTION
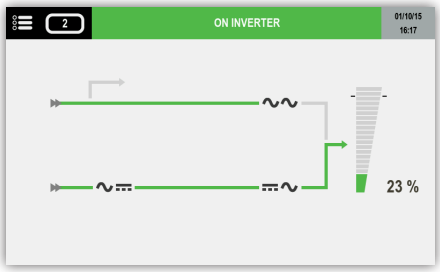	If battery is absent, the battery icon is not displayed
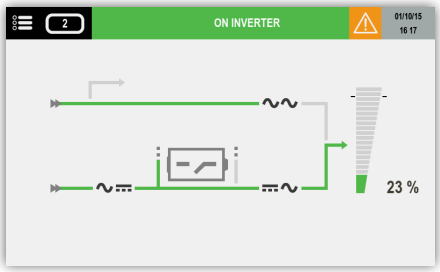	If battery is present but not connected, the icon is displayed
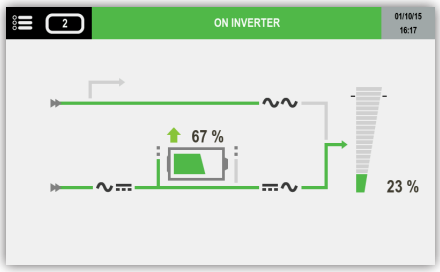	If the battery is present and charging, the arrow icon is displayed
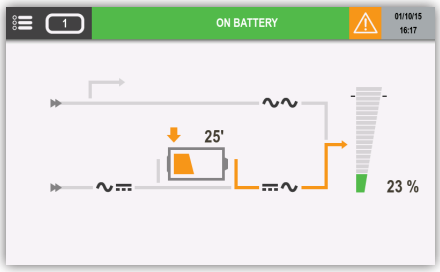	If the battery is present and discharging, the arrow icon is displayed
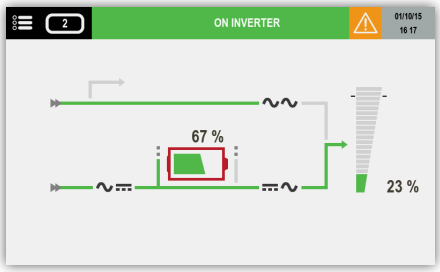	If a battery alarm has occurred, the red icon is displayed

6.6.1. Additional icons

Bypass impossible

Bypass locked

“Genset Mode” when the gen set contact is active. Need ADC+SL correctly configured.

Maintenance alarm.

Preventive maintenance is requested.

6.7. Event log page

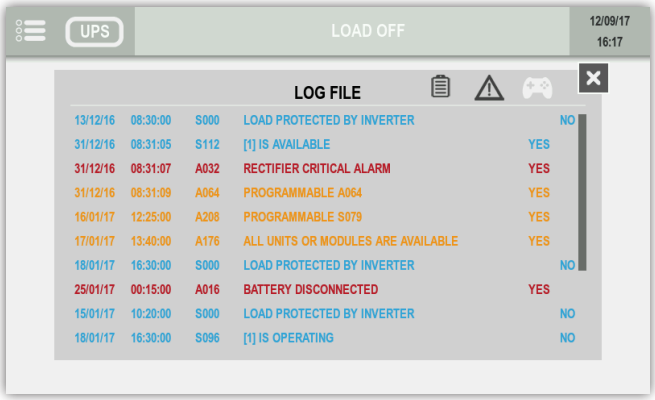

Show STATUS events

Show ALARMS events

Show CONTROLS

6.8. Menu function descriptions

6.8.1. Entering passwords

Some operations and settings require a password in order to be performed.

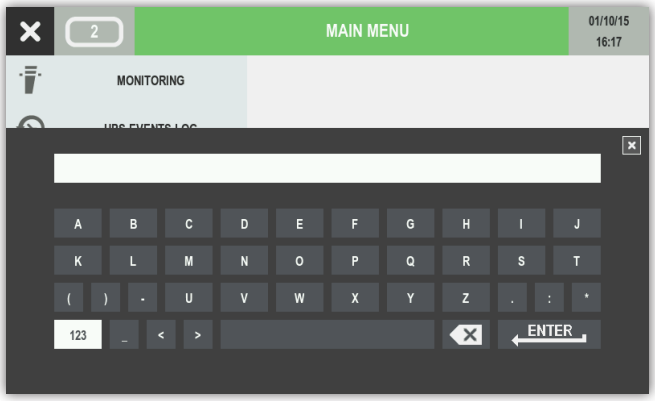

Press “123” to cycle to number view page.

Press ENTER to confirm.

Press ENTER to confirm the selection or HOME BUTTON to abort.

6.8.2. MONITORING menu

Submenu Alarm opens the alarm pages.

Submenu Status opens the status pages.

6.8.3. EVENTS LOG menu

This menu accesses the event log (Status and Alarms).

6.8.4. MEASUREMENTS menu

This menu displays all UPS measurements relating to the rectifier input stage, output stage, batteries, bypass input stage and inverter.

The pins on the bottom of the screen indicate whether or not there are more pages. Sliding to the right or left changes measurements page.

6.8.5. CONTROLS menu

This menu contains the commands that can be sent to the UPS. Some of them are password protected. If a command is not available, a COMMAND FAILURE message appears.

- UPS PROCEDURE: START/ON MAINTENANCE BYPASS see 'Operating procedures' chapter.
- BATTERY: BATTERY CONTROL > BATTERY TEST: this function checks whether or not test conditions are available and returns the results.
- ECO MODE CONTROLS: this function sets/resets the ECO MODE.
- MAINTENANCE: Alarms reset: this function clears the alarm history, LED test: this function activates LED flashing for a few seconds.
- TRANSFER: transfer load to inverter or Bypass
- MODE: Ecomode.
- SUBSET: Start and stop rectifier and inverter.

6.8.6. UPS CONFIGURATION MENU

- CLOCK: this function sets the date and time.
- COM-SLOTS: this function configures the RS485 modbus serial link.
- REFERENCE: this function gives the possibility to customised the unit reference and the location.
- REMOTE: this function enables controls from remote devices through MODBUS protocol (NET VISION for example).

6.8.7. USER PARAMETERS MENU

This menu contains the different functions for users such as language, password, buzzer, display, preferences, touchscreen calibration.

6.8.8. SERVICE MENU

This menu is reserved for support service personnel and holds UPS identification data and utilities for software upgrades.

6.9. Additional user functions

6.9.1. Phase color modification

- Enter MAIN MENU > USER PARAMETERS > PREFERENCES

For each phase is possible to select a specific colour in a set of colour range. Those colours are applying in the measurements pages.

Colour	Default colour
Yellow	Phase 3
Orange	
Red	
Green	
Light blue	Phase 2
Dark blue	
Purple	Phase 1
Brown	
Light grey	
Dark grey	
Black	

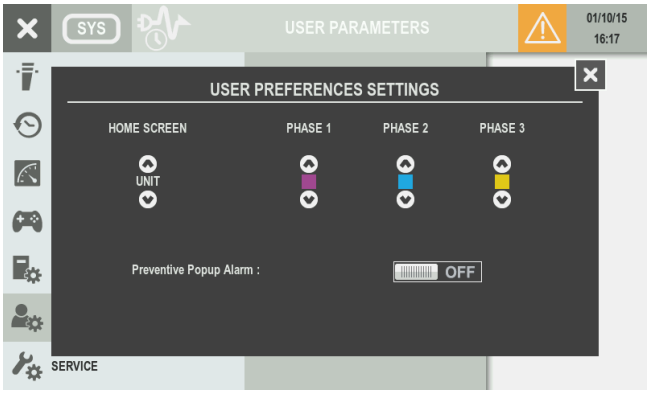

The popup alarm appears in case of critical alarms. This function can be extended to preventive alarms by switching “Preventive Popup Alarm” to ON.

NOTE!

these additional parameters are not adjustable in case of unit Delphys system with common Bypass the default value are used

7. OPERATING PROCEDURES

NOTE: before carrying out any operations on the unit read the 'Safety standards' chapter carefully.

NOTE: with the stop procedure the load will be disconnected.

7.1. Switching ON

- Connect the mains and auxiliary mains to the UPS.
- Switch ON input switch Q1.
- Wait until display switch on.
- Enter MAIN MENU > CONTROLS > UPS PROCEDURE.
- Select START PROCEDURE and press ENTER.
- Carry out the operations indicated on the display.

7.2. Bypass operations

Switching onto maintenance bypass

This operation creates a direct connection between the UPS input and output, excluding the equipment control part. This operation is performed in the event of:

- Standard maintenance.
- Serious failure has occurred.

WARNING! LOAD POWERED BY AUX MAINS: your load is exposed to mains disturbances.

- Enter MAIN MENU > CONTROLS > UPS PROCEDURE.
- Select ON MAINTENANCE BYPASS and press ENTER.
- Carry out the operations indicated on the display.

NOTE!
When an external maintenance bypass is present:

- carry out the procedure described above;
- put the switch to position 1.

Switching on from maintenance bypass

- Put switch Q1 into position 1 (mains ON).
- Wait for the display to switch on.
- Enter MAIN MENU > CONTROLS > UPS PROCEDURE.
- Select START PROCEDURE and press ENTER.
- Carry out the operations indicated on the display.

NOTE!
When an external maintenance bypass[1] is present, put the switch to position 0 (OFF).

[1] Not monitored by the UPS or by the parallel system.

8. OPERATING MODES

8.1. On line mode

A special feature of the UPS is the ONLINE double conversion in conjunction with low distortion mains power absorption. In ON LINE mode, the UPS can supply a voltage that is fully stabilised in frequency and amplitude, regardless of any interference in the mains power supply, within the most stringent classification of UPS regulations.

ONLINE operation provides three operating modes according to mains and load conditions:

- Inverter mode

This is the most frequent operating condition: energy is drawn from the primary mains power supply and converted and used by the inverter to generate the output voltage to power the connected loads.

The inverter is constantly synchronised in frequency with the auxiliary mains to enable load transfer (due to an overload or inverter shutdown) without any break in the power supply to the load.

The battery charger supplies the energy required to maintain or recharge the battery.

- Bypass mode

In the event of inverter failure, the load is automatically transferred onto the auxiliary mains without any interruption in the power supply.

This procedure may occur in the following situations:

  – in the event of a temporary overload, the inverter continues to power the load. If the condition persists, the UPS output is switched.
  – on to the auxiliary mains via automatic bypass. Normal operation, which is from the inverter, returns automatically a few seconds after the overload disappears.
  – when the voltage generated by the inverter goes outside the limits due to a major overload or a fault on the inverter.
  – when the internal temperature exceeds the maximum value allowed.

- Battery mode

In the event of a mains failure (micro interruptions or extended power cuts), the UPS continues to power the load using the energy stored in the battery.

8.2. High efficiency mode

The UPS has a selectable, programmable economy operating mode (ECO MODE) that can increase overall efficiency by up to 99% for energy saving purposes. If the power supply fails, the UPS will automatically switch onto the inverter and continue to supply power to the load by drawing energy from the battery.

This mode does not provide perfect stability in frequency and voltage like the NORMAL MODE. Therefore the use of this mode should be carefully evaluated according to the level of protection required by the application. With the optional board Net Vision specific daily or weekly time intervals can be selected and programmed to power applications directly from the auxiliary mains.

ECO MODE operation provides very high efficiency, since the application is powered directly from the auxiliary mains via the automatic bypass under normal operating conditions.

To activate follow the correct procedure in the control panel.

8.3. Converter mode

In converter mode the UPS can supply a fully stabilised sinusoidal output voltage with a different frequency from the input power line (50 Hz or 60 Hz is available as output frequency value).

NOTE: only set this mode on UPS units with the auxiliary mains (AUX MAINS) disconnected! Do not set this mode on UPS units with common mains lines as it could damage the load!

8.4. Operation with maintenance bypass

If the internal maintenance bypass is activated using the appropriate procedure, the load is powered directly from the maintenance bypass, while the UPS is separated from the power supply and can be switched off.

This operating mode can be selected for maintenance to be carried out on the system, so that the necessary actions can be performed by service personnel without having to disconnect the power supply to the load.

8.5. Operation with motor generator (genset)

The UPS can be operated in conjunction with a generator (GENSET) over the ADC+SL card (refer to 'Standard features and option' chapter). With a generator, the frequency and voltage ranges of the auxiliary mains can be increased to accept the instability of the GENSET and at the same time to avoid operation from the battery or risks of out-of-synchronisation switching on to the bypass.

9. STANDARD FEATURES AND OPTION

9.1. ADC+SL CARD

The ADC+SL (Advanced Dry Contact + Serial Link) is a slot optional board that provides:

- 4 relays for external device activation (can be set as normally closed or normally open).
- 3 free inputs to report external contacts to UPS.
- 1 connector for external battery temperature sensor (optional).
- RS485 insulated serial link providing MODBUS RTU protocol.
- 2 LEDs indicating board status.

The board is plug&play: the UPS is able to recognise its presence and configuration (up to 4 standard operating modes can be selected by the display) and manages the ADC+SL outputs and the inputs accordingly. It is possible to create a custom operation mode through after sales service.

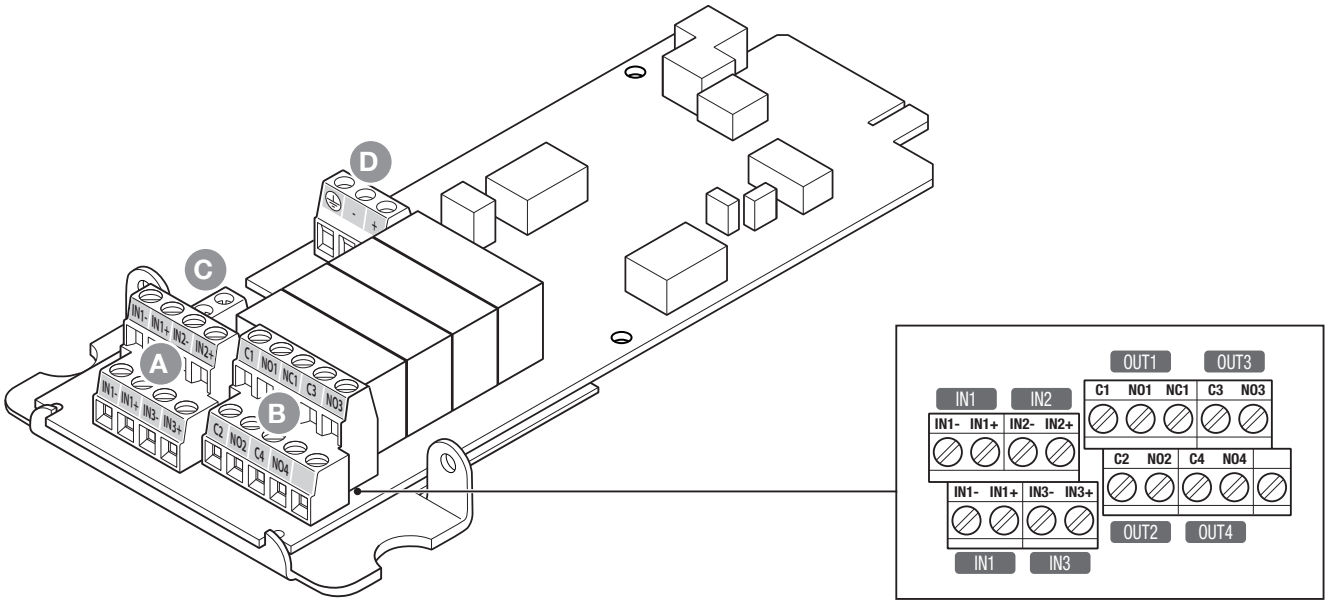

KEY

A	3 free inputs to link external contacts to UPS.
B	4 relays for external device activation.
C	1 connector for external temperature sensor.
D	RS485 insulated serial link.

NOTE!

If the board is removed while operating, an alarm is flagged on the control panel. Perform an "Alarm reset" control to cancel it.

INPUT

- Free voltage loop.
- INx+ has to be connected to INx- to close the loop on XB4 connector.
- Inputs must be isolated with basic insulation from a primary circuit up to 277 V.
- IN1 is duplicated, giving the possibility to link the UPS POWER OFF signal to other equipment, for example.

Relay outputs

- Contact voltage guaranteed at 277 V (AC) / 25 V (DC) – 4 A (for higher voltage, please contact the manufacturer).
- Relay 1 gives the possibility of choosing between normally closed (NC1) or normally open (NO1) position. Relays 2, 3 and 4 only have normally open position (NOx).
- On connector XB3, Cx means common, NOx means normally open position.

Input / Output setting

- Input and relays have to be programmed by Expert Service
- Inputs can be reported in status and alarms tables,
- Relays can be set with specific status and alarms combinaison

Rs485 serial link

- Insulated RS485, protected against over voltage. Only for local bus purposes; maximum ~500 m.
- Pull up and pull down line resistor XJ1 (failsafe biasing): jumper open by default.
- Possibility of fixing the RS485 cable to the board.
- Cable type required: twister pair cable + shield to connect to ground. (AWG 24, 0.2 mm2 for example).

The INPUT and RELAYS are managed with information coming from the UPS.

NOTE!

Inputs and relays can be re-programmed depending on requirements.

Contact your SOCOMEC after-sales service to change Input/Output programming.

Information coming from inputs can be reported in the UPS database for display on the mimic panel and is accessible on the MODBUS table.

The UPS can manage up to two ADC+SL option cards. The cards can be re-programmed for other uses.

In this specific case, the 2 serial links (SLOT 1 and SLOT 2) are independent.

Modbus serial link

The RS485 provides MODBUS RTU protocol.

The description of MODBUS addresses and UPS database are described in the MODBUS user manual. All manuals are available on SOCOMEC's web site (www.socomec.com).

Serial link settings

COM1 relates to serial port on board in SLOT 1.

COM2 relates to serial port on board in SLOT 2.

Settings are available via the mimic panel to configure:

- Baud rate: 2400, 9600, 19200.
- Parity: None, Even, Odd.
- MODBUS slave number: 1 to 32.

Board status

Board presence is reported through status S064 for slot 1 and S065 for slot 2.

In the case of board failure, 'Option board alarm' (A062) occurs to prevent malfunctioning.

9.2. Net Vision card

NET VISION is a communication and management interface designed for business networks. The UPS behaves exactly like a networked peripheral, it can be managed remotely, and allows the shutdown of network workstations.

NET VISION allows a direct interface between the UPS and LAN network avoiding dependence on the server and support SMTP, SNMP, DHCP and many other protocols. It interacts via the web browser.

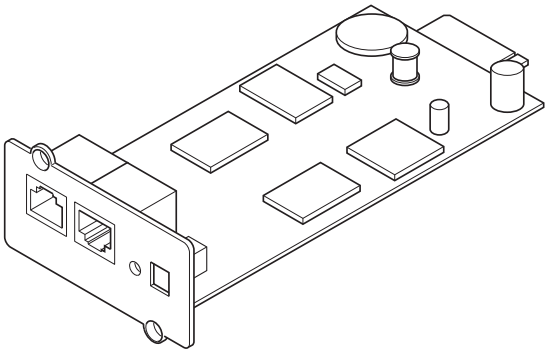

9.2.1. EMD

EMD (Environmental Monitoring Device) is a device to be used in conjunction with the NET VISION interface and provides the following features:

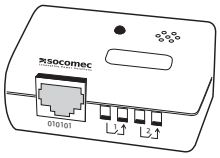

- temperature and humidity measurements + dry contact inputs,
- alarm thresholds configurable via Web browser,
- notification of environmental alarm via email and SNMP traps.

9.3. ACS card

ACS (Automatic Cross Synchronisation) card is used to receive a synchronisation signal from an external source and manage it for the UPS where it is installed, and provide a synchronising signal, where requested, to another UPS.

9.4. Modbus TCP card

With the MODBUS TCP card fitted in the options slot, the UPS can be monitored from remote stations using the appropriate protocol (MODBUS TCP - IDA).

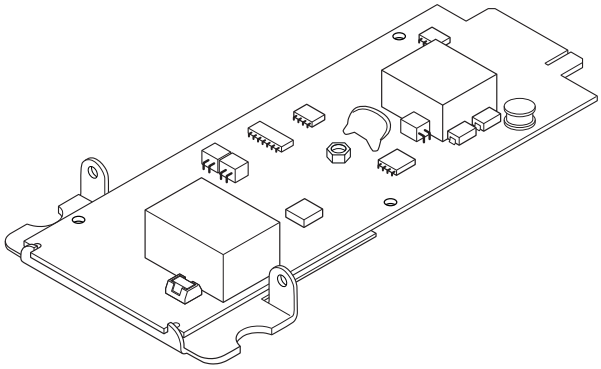

9.5. BACnet card

With the BACnet card fitted in the options slot, the UPS can be monitored from remote stations using the appropriate protocol (BACnet - IDA).

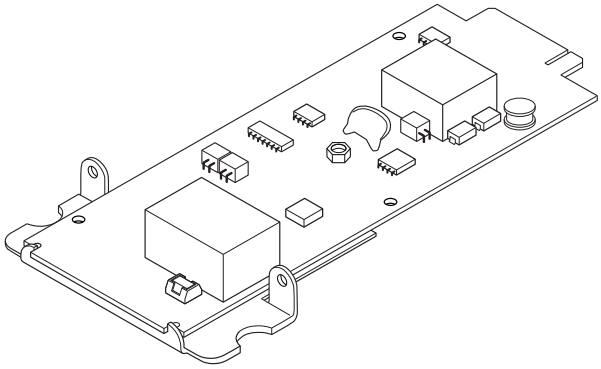

9.6. Remote touchscreen display

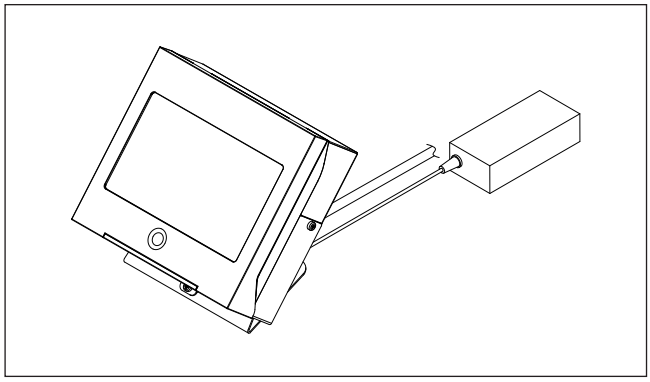

NOTE!

Available only with ADC+SL option card.

9.7. Software option

Visit www.socomec.com and enter DOWNLOAD > SOFTWARE > UPS SOFTWARE to find the communication software suitable for your requirements.

NOTE!

Before performing any operations, check that the software is compatible with your UPS model.

10. MULTILEVEL COMMUNICATION

Delphys BC can manage various serial, contact and Ethernet communication channels at the same time. The 2 communication slots available allow the use of signalling accessories and cards.

Each communication channel is independent; simultaneous connections can thus be made to have various levels of remote signalling and monitoring (see the § 9 for a detailed evaluation of the functionality of the cards that can be installed in the slots).

The table below shows the possible connections between UPS communication channels and the external devices.

Possible options	SLOT 1	SLOT 2
ADC + Serial Link interface	•	•
NetVision	•	•
Modbus TCP	•	•
BACnet	•	•
External gateway for LIB		•
ADC Delphys	•	•
RS485 ModBus RTU Delphys	•	•

* It is possible to use one isolated serial PCB only.

for localisation, please see § “Identifying switching and connection organs“.

Profibus / Profinet gateway are connected to ADC + Serial Link card.

10.1. Isolation controller

This device continually checks the transformer isolation, displaying an alarm message on the mimic panel

10.2. External maintenance bypass

This device will electrically exclude and isolate Delphys BC UPS (e.g. for maintenance operations) without interrupting the power supplied to the load

10.3. Adc card

This card can be configured to control up to four outputs that are normally closed or normally open and up to three digital inputs. A maximum of two cards can be installed on each unit.

11. TROUBLESHOOTING

11.1. Delphys BC unit alarms

- **Unit imminent stop (A000).**
- **Unit Overload (A001).**

The load power draw is greater than Delphys BC's nominal output.

Check the load on the display and disconnect loads not requiring UPS service or distribute the total load over the three phases.

Overloading results in the load not being powered by UPS for a limited period of time. For further details, see the technical specifications.

- **Transfer blocked (A003).**

Switching from UPS unit bypass to inverter may be inhibited by an inverter failure. Reset the alarm and contact SOCOMEC After-sales Service.

- **Transfer impossible (A004).**

Switching from UPS unit inverter to bypass is prevented by problems on the auxiliary mains supply: mains supply out of tolerance, not synchronised,... Ensure that Q4 is closed, that the auxiliary mains supply is available and that the values are within range.

- **Insufficient resources (A005).**

UPS unit is in overload, with auxiliary mains supply and inverter inhibited. The power supply to the load will be interrupted if the load is not brought back within range or the auxiliary mains supply fails. Check the load on the display and disconnect loads not requiring UPS service or distribute the total load over the three phases.

- **Fan alarm (A054).**

Ventilation system failure. Contact After-sales Service.

- **Charger alarm (A038).**

This alarm is generated in case of a battery charger fault. Check for other alarms and contact After-sales Service if necessary.

- **Operating on battery (A019).**

This alarm is generated when UPS unit is operating on battery power. The input power supply has failed or is insufficient (voltage/frequency out of tolerance). Check for the "rectifier input supply fault" alarm. If there is no power failure, check whether upstream protections have tripped and whether Q1 is open.

- **Battery general alarm (A027).**

General battery alarm due to: battery test failed, maximum battery voltage, battery circuit breaker open, battery charger failure. Check for other alarms and inspect the batteries.

- **Battery room alarm (A021).**

This alarm is generated when the battery room temperature, measured with an external sensor, is higher than the permitted maximum. Check the displayed temperature, and check the battery room ventilation/conditioning system.

- **Batteries discharged (A017).**

This alarm is generated when the batteries' charge is low and UPS is about to switch off. Check for other alarms.

- **Battery circuit open (A016).**

Battery circuit breaker open.

- **Bypass preventive alarm (A049).**

This alarm is generated when the bypass has reached the maximum permitted overload time or in case of problems when switching from inverter to bypass. Check for other alarms. In case of overload, check UPS's load and reset the alarms.

- **Ambient T° maximum (A002).**

The machine room temperature is above the recommended maximum. Check UPS room temperature and ventilation/conditioning system. If there is a fan alarm, contact After-sales Service.

- **Preventive maintenance alarm (A012).**

UPS must be checked periodically by After-sales Service to ensure maximum efficiency and performance. If the alarm displays, UPS must be inspected by a qualified technician.

11.2. Delphys BC parallels system alarms

- **UPS imminent stop (A000).**
- **UPS Overload (A001).**

The load power draw is greater than the system's nominal output.

Check the load on the display and disconnect loads not requiring UPS service or distribute the total load over the three phases.

Overloading results in the load not being powered by UPS for a limited period of time. For further details, see the technical specifications.

- **UPS transfer blocked (A003).**

Switching from system bypass to inverter may be inhibited by an inverter failure. Reset the alarm and contact Aftersales Service.

- **UPS transfer impossible (A004).**

Switching from system inverter to bypass is prevented by problems on the auxiliary mains supply: mains supply out of tolerance, not synchronised, etc. Ensure that Q4 is closed, that the auxiliary mains supply is available and that the values are within range.

- **UPS Insufficient resource (A005).**

The system is in overload, with auxiliary mains supply and inverter inhibited. The power supply to the load will be interrupted if the load is not brought back within range or the auxiliary mains supply fails. Check the load on the display and disconnect loads not requiring UPS service or distribute the total load over the three phases

- **UPS redundancy loss (A006).**

In case of a parallel redundant system, loss of redundancy is due to possible problems with one of the units. Check values and alarms status of all units, and make sure that none of the operating units is overloaded.

- **UPS general alarm (A015).**

This alarm is generated if at least one alarm is present on at least one unit. Check the other active alarms for details.

- **Unit 1...8 general alarm (A096 - A103).**

These alarms are generated if at least one alarm is present on unit 1 to 6 respectively. Check the other active alarms for details.

- **Manual maintenance bypass alarm (A056).**

This alarm is generated if circuit breakers Q5 (bypass) and Q3 (output) are closed at the same time. Check the position of the circuit breakers.

- **Rotation phase fault (A051).**

The phase cycle of the auxiliary mains is incorrect. Swap two input phases or two phases of the auxiliary mains supply (only for UPS with separate auxiliary mains supply).

- **Genset alarm (A036).**

The genset has sent an alarm; check the genset.

- **Option board alarm (A062).**

This alarm is generated if one of the optional boards is no longer communicating with UPS controller. Check that the board is correctly mounted and reset the alarms.

11.3. Preventive maintenance

All operations on the equipment must be carried out solely by SOCOMEC personnel or by authorised service personnel.

Maintenance requires accurate functionality checks of the various electronic and mechanical parts and, if necessary, the replacement of parts subject to wear and tear (batteries, fans and condensers). It is recommended to carry out periodic specialised maintenance (annually), in order to keep the equipment at the maximum level of efficiency and to avoid the installation being out of service with possible damage/risks. Moreover, attention should be paid to any requests for preventive maintenance that the equipment may automatically display with alarm/warning message.

11.3.1. Batteries

The state of the battery is fundamental to UPS operation.

Thanks to the Expert Battery System, the information relating to the state and the conditions of use of the battery are processed in real time and the recharging and discharging procedures are selected automatically in order to optimise battery life expectancy and offer maximum performance.

Furthermore, during the operating life of the battery, Delphys BC™ stores statistics on the conditions of use of the battery for analysis.

Since the expected life of the batteries is very much dependent on operating conditions (number of charging and discharging cycles, load rate, temperature), a periodic check by authorised personnel is recommended.

When replacing the batteries, use the same type and configuration by placing them in the appropriate containers so as to avoid the risk of acid leakage.

The replaced batteries must be disposed of at authorised recycling and disposal centres.

Do not open the plastic cover of the batteries as they contain harmful substances.

11.3.2. Fans

The life of the fans used to cool the power parts is dependent on the using and environmental conditions (temperature, dust).
Preventive replacement by an authorised technician is recommended within 4 years (in normal operating conditions).

When needed, fans must be replaced as per specifications by SOCOMEC .

11.3.3. Capacitors.

The equipment houses electrolytic capacitors (used in the rectifier and inverter section) and filtering capacitors (used in the output section), whose life is dependent on using and environmental conditions.

The average expected life of these components is shown below:

- Electrolytic capacitors: 5 years;
- Filtering capacitors: 5 years.

In any case the effective state of the components is verified during preventive maintenance.

Socomec: our innovations supporting your energy performance

1 independent manufacturer

3,600 employees worldwide

10 % of sales revenue dedicated to R&D

400 experts dedicated to service provision

Your power management expert

POWER SWITCHING

POWER MONITORING

POWER CONVERSION

ENERGY STORAGE

EXPERT SERVICES

The specialist for critical applications

- Control, command of LV facilities
- Safety of persons and assets
- Measurement of electrical parameters
- Energy management
- Energy quality
- Energy availability
- Energy storage
- Prevention and repairs
- Measurement and analysis
- Optimisation
- Consultancy, commissioning and training

A worldwide presence

12 production sites
- France (x3)
- Italy (x2)
- Tunisia
- India
- China (x2)
- USA (x3)

28 subsidiaries and commercial locations
- Algeria • Australia • Belgium • China • Canada
- Dubai (United Arab Emirates) • France • Germany
- India • Indonesia • Italy • Ivory Coast • Netherlands
- Poland • Portugal • Romania • Serbia • Singapore
- Slovenia • South Africa • Spain • Switzerland
- Thailand • Tunisia • Turkey • UK • USA

80 countries where our brand is distributed

UK CA Socomec U.K. Limited, Unit 7-9 Lakeside Business Park, Broadway Lane, South Cerney, Cirencester, Glos. GL7 5XL.
www.socomec.co.uk

CORPORATE HQ CONTACT: SOCOMEC SAS, 1-4 RUE DE WESTHOUSE, 67235 BENFELD, France.

HEAD OFFICE

SOCOMEC GROUP
SAS SOCOMEC capital 10 607 040 €
R.C.S. Strasbourg B 548 500 149
B.P. 60010 - 1, rue de Westhouse
F-67235 Benfeld Cedex
Tel. +33 3 88 57 41 41 - Fax +33 3 88 57 78 78
info.scp.isd@socomec.com

YOUR DISTRIBUTOR / PARTNER

www.socomec.com

100 years OF SHARED ENERGY 1922 — 2022

socomec Innovative Power Solutions

Non contractual document. © 2022, Socomec SAS. All rights reserved. - Document printed on paper from sustainably managed forests.