DELPHYS BC

from 160 to 200 kVA

Installation manual EN

socomec
Innovative Power Solutions

TABLE OF CONTENTS

1. WARRANTY CERTIFICATE 4

2. SAFETY 5

2. 1. Important 5

2. 2. Description of the symbols used on the labels applied to the unit 6

3. FOREWORD 8

4. REQUISITES 8

4. 1. Storing, shipping and moving 8

4. 2. Environmental requisites 9

4. 3. General rules for cable installation on tray 12

4. 4. Electrical requisites 12

4. 5. External connections 13

4. 6. Values of currents for cable sizing 14

4. 7. Sizing of circuit breakers 15

4. 8. Backfeed protection 16

4. 9. Protection and cross-section of battery cables 16

5. INSTALLATION 17

5. 1. Dimensions and weight (Overall) 17

5. 2. Unpacking procedure 17

5. 3. Moving 18

5. 4. Cabinet positioning 21

5. 5. Battery cabinet installation 22

5. 6. Fixing to the floor (a raised floor or directly to the floor) 23

5. 7. Battery cabinets fixing 23

5. 8. Separated cabinets 23

5. 9. Identifying switching and connection organs 24

5. 10. Installation procedures and instructions 25

5. 11. Battery characteristics 27

5. 12. Terminal connections characteristics 28

5. 13. Connecting the battery cabinet temperature probe 28
5. 14. Backfeed protection (UPS C1, module C6 / C7) 29
5. 15. Automatic opening of battery protection Q20 30
5. 16. Completion of the installation 30
5. 17. Rack Slot 31
5. 18. UPS general power off connection 32
5. 19. Connection of the generator (where there is the by-pass) 32
5. 20. Isolation transformer 32
5. 21. Ups parallel configuration 33
6. PREVENTIVE MAINTENANCE 38
6. 1. Batteries 38
6. 2. Fans 38
6. 3. Capacitors. 38
7. MULTIPLE COMMUNICATION 39
8. OPTIONS 40
8. 1. ADC + Serial Link interface 40
8. 2. ADC Delphys interface 40
8. 3. Isolation controller 40
8. 4. External maintenance bypass 40
8. 5. Net Vision card 41
8. 6. ACS card 41
8. 7. Modbus TCP card 41
8. 8. BACnet card 41
9. TECHNICAL SPECIFICATIONS 42
10. APPENDIX 43
10. 1. Plan 1: Floor fixing 43
10. 2. Plan 2: Dimensions 44
10. 3. Plan 3: Battery Floor fixing 45

ENGLISH

1. WARRANTY CERTIFICATE

The warranty terms and conditions are stipulated in the offer, by default the following clauses apply.

The SOCOMEC warranty is strictly limited to the product(s) and does not extend to equipment which may be integrated with this/these product(s), nor the performance of such equipment.

The manufacturer guarantees its products to be free from manufacturing faults and defects in design, material or workmanship, subject to the limits set forth below.

The manufacturer reserves the right to modify the delivery with a view to fulfilling these guarantees or to replace defective parts. The manufacturer's warranty does not apply in the following cases:

- fault or defect in the design of parts added or supplied by the customer
- fault due to unforeseen circumstances or force majeure
- replacement or repair resulting from normal wear and tear of the modules or machinery
- damage caused by negligence, lack of proper maintenance or misuse of the products
- repair, modification, adjustment or replacement of parts undertaken by unqualified third parties or personnel without the express consent of SOCOMEC.

The warranty period is twelve months commencing from the date of delivery of the product.
The repair, replacement or modification of the parts during the warranty period does not imply or justify any extension of the warranty beyond the original period.

In order to establish a valid warranty claim, the purchaser must notify the manufacturer in writing immediately after the discovery of any apparent material defects and provide any and all supporting evidence of the defects at the latest within eight days before the date of expiry of the warranty.

Defective parts which have been returned and replaced free of charge shall become the property of SOCOMEC.

The warranty is void if the purchaser has undertaken modifications or repairs on the devices on his or her own initiative and without the express consent of the manufacturer.

The manufacturer's responsibility is strictly limited to the obligations defined in this warranty (repair and replacement) excluding any other right to claim compensation or indemnity.

Any import tax, duty, fee or charge of any nature whatsoever imposed by European regulations or those of an importing country or of a transit country shall be paid by the purchaser.

All rights reserved

socomec
Innovative Power Solutions

2. SAFETY

2. 1. Important

- This document provides important instructions for the safe use, movement and connection of the DELPHYS uninterruptible power system (UPS).
- SOCOMEC retains the full and exclusive ownership rights over this document. Only a personal right to utilize the document for the application indicated by SOCOMEC is granted to the recipient of such document. All reproduction, modification, dissemination of this document whether in part or whole and by any manner are expressly prohibited except upon Socomec's express prior written consent.
- This document is not a specification. SOCOMEC reserves the right to make any changes to data without prior notice.
- The unit must be installed and activated only by qualified technical personnel and authorised by SOCOMEC.

Delphys BC MUST be handled with the utmost care by at least two people.

- The unit must remain in a vertical position in all circumstances.
- Connect the PE ground conductor first before you make any other connection.

The Delphys BC mains power supplies (rectifier and bypass) must be protected from voltage transients with devices that are suited to the installation; the mains voltage transients must be limited to 2.5 kV. These devices must be sized to take into account all the installation parameters (geographical position, whether or not there is a lightning rod, whether or not there are other suppressors in the electrical installation, etc.).

- Do not expose UPS to rain or liquids in general. Do not introduce external bodies.
- If UPS is not equipped with automatic sectioning against back feed or if the switch is external to UPS, affix a label bearing the following words on all the external switches of Delphys BC power supply:

Before working on this circuit
- isolate Uninterruptible Power System (UPS) DELPHYS
- then check for Hazardous Voltage between all terminals including the protective earth

Risk of Voltage Backfeed

- Keep this manual handy for future consultation.
- If the unit fails, it must be repaired only by authorised technicians that have been specially trained for this purpose.
- This equipment conforms to the European Community directives for professional equipment and bears the approval mark: CE
- This equipment conforms to AS standards and bears the approval mark: (E2376)
- The manufacturer will not be held liable for failure to follow the instructions in this manual or available at www.socomec.com
- The regulations and standards applicable to the place of installation of the apparatus must also be observed to ensure the prevention of accidents.
- Reference security information is in English language
- This Safety Information is to be retained for future reference
- For other languages please contact SOCOMEC or relevant distributor,

ENGLISH

- Do not connect the output neutral to ground (except the TNC Option). Delphys BC does not modify the neutral arrangements of the system; the use of an isolation transformer is required should it be necessary to modify the neutral arrangements downstream of UPS (see § 4.5.1 " Connecting earth cables").
- If UPS needs to be scrapped, it is essential to entrust the equipment solely and exclusively to specialist disposal companies. These are obliged to break up and dispose of the various components in accordance with the legal provisions in force nationally.
- Before connecting the external battery cabinet, check that this is fully compatible with the model of UPS.
- The use of external battery cabinets not supplied by the manufacturers is not recommended.
- Switch off and isolate UPS and then wait for 5 minutes before removing the protection panels in order to carry out work on parts under dangerous voltage.
- Danger of explosion if the batteries are replaced with others of the wrong type.
- The batteries are considered as toxic waste. If they are replaced, entrust the used batteries solely and exclusively to specialist disposal companies. As provided for by the local laws in force, batteries must not be disposed of with other industrial or domestic waste.

It is very dangerous to touch any part of the batteries as there is no isolation between the batteries and the mains power source.

The product you have chosen is designed for commercial and industrial use only. In order to be used for particular “critical applications” such as life support systems, medical applications, commercial transportation, nuclear facilities or any other application or systems where product failure is likely to cause substantial harms to person or property, the products may have to be adapted. For such uses we would advise you to contact SOCOMEC beforehand to confirm the ability of these products to meet the requested level of safety, performance, reliability and compliance with applicable laws, regulations and specifications.

This is a product for commercial and industrial application in the second environment – installation restrictions or additional measures may be needed to prevent disturbances.

The liability of SOCOMEC in relation with the product subject of these instructions is as stated in the applicable conditions of sales agreed between SOCOMEC and its client

2. 2. Description of the symbols used on the labels applied to the unit

All the precautions and the warnings on the labels and plates on the inside and outside of the equipment should be respected.

DANGER! HIGH VOLTAGE (BLACK/YELLOW)

GROUND TERMINAL

READ THE USER MANUAL BEFORE USING THE UNIT

ENGLISH

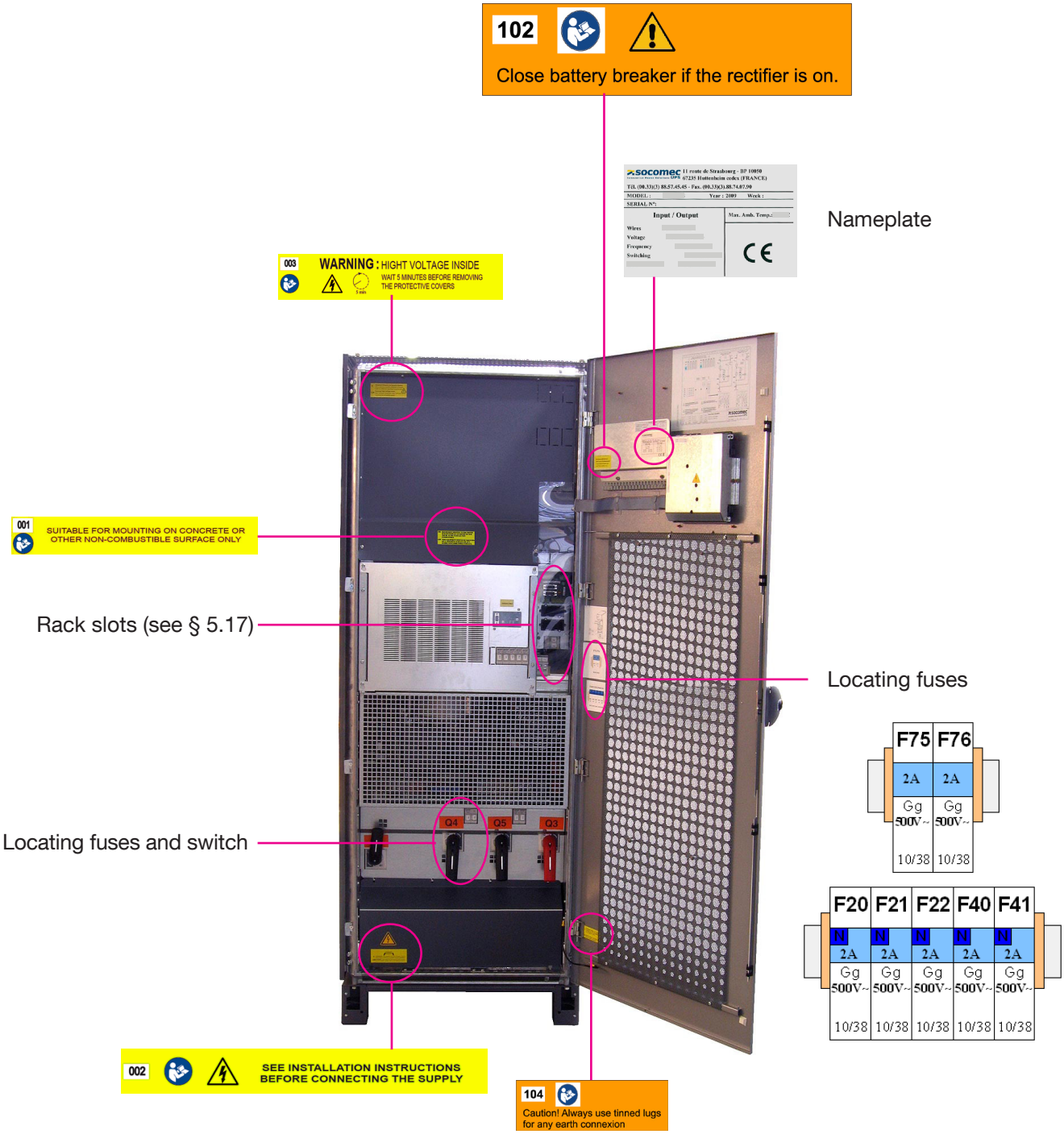
102
Close battery breaker if the rectifier is on.
Nameplate
003
WARNING : HIGHT VOLTAGE INSIDE
WAIT 5 MINUTES BEFORE REMOVING THE PROTECTIVE COVERS
001
SUITABLE FOR MOUNTING ON CONCRETE OR OTHER NON-COMBUSTIBLE SURFACE ONLY
Rack slots (see § 5.17)
Locating fuses
Locating fuses and switch
Q4
Q5
Q3
F75 F76
2A 2A
Gg Gg
500V~ 500V~
10/38 10/38
F20 F21 F22 F40 F41
N N N N N
2A 2A 2A 2A 2A
Gg Gg Gg Gg Gg
500V~ 500V~ 500V~ 500V~ 500V~
10/38 10/38 10/38 10/38 10/38
002
SEE INSTALLATION INSTRUCTIONS BEFORE CONNECTING THE SUPPLY
104
Caution! Always use tinned lugs for any earth connexion

3. FOREWORD

We thank you for the trust you have in SOCOMEC Uninterruptible Power Systems.
This equipment is fitted with up to date technology with power semiconductors (IGBT) including a digital micro-controller.
Our equipment complies with standard IEC 62040-2 and IEC 62040-1.

This is a product for restricted sales distribution to informed partners. Installation restrictions or additional measures may be needed to prevent disturbances.

It is recommended that the ambient temperature and the humidity of UPS environment are maintained below the values specified by the manufacturer.

REGULATIONS CONCERNED WITH ENVIRONMENTAL ISSUES

Recycling of electrical products and equipment.
Provision is made in European countries to break up and recycle materials making up the system. The various components must be disposed of in accordance with the legal provisions in force in the country where the system is installed.

Battery wastes
Used batteries are considered as toxic wastes. It is therefore essential to entrust them solely and exclusively to firms specialised in their recycling. They can not be treated with other industrial or household wastes, as set out in local regulations in force.

4. REQUISITES

The packaging guarantees the stability of UPS during shipping and physical transfer. Carry the packaged unit as close as possible to the installation site.

When moving the unit on even slightly sloping surfaces, use the blocking equipment and breaking devices to ensure that the unit does not fall over.

4. 1. Storing, shipping and moving

- **if storing more than 6 month, please contact us**
- **UPS must remain in a vertical position during all shipping and moving operations.**
- **Ensure that the floor** is strong enough to support the weight of Delphys BC and of the battery cabinet, if used.

Avoid moving the unit by putting pressure on the front door.

UPS MUST be handled with the utmost care by at least two people.

CAUTION IF DAMAGED.
Packages, crushed, punctured, or torn such that contents are revealed must be set aside in an isolated area and inspected by a qualified person. If the package is deemed to be not shippable, the contents must be promptly collected, segregated, and either the consignor or consignee contacted.

All packaging material must be recycled in compliance with the laws in force in the country where the system is installed.

4. 2. Environmental requisites

- Delphys BC is not designed for outdoor use.
- Do not expose UPS to direct sunlight or to sources of excessive heat.
- The recommended operating temperature, humidity and altitude values are listed in the technical specifications table (see chapter 9). Cooling systems may be required to maintain these values.
- UPS must be installed in an environment without obstructions and which is dry, clean and dust-free.
- Avoid dusty environments or areas where there is dust from conductive or corrosive materials (e.g. metal dust or chemical solutions).
- UPS can be installed against a wall; the distance will depend on the cables present. The upper part of UPS must be positioned at least 40 cm away from the ceiling (see figure 4.2-1).
- UPS switches are accessed from the front; however, a space of at least 1.5 metres should be left at the front of UPS for maintenance purposes.
- For UPSs arranged frontally, leave a minimum space of 210 cm between the two cabinets so as to allow a passageway when both doors are open (in accordance with the provisions of standard IEC 60364 - see figure 4.2-1).

UPS should only be installed on a concrete surface or other non-combustible surface.

In case of corrosive or industrial atmosphere environment, please, consult us.

4.2-1

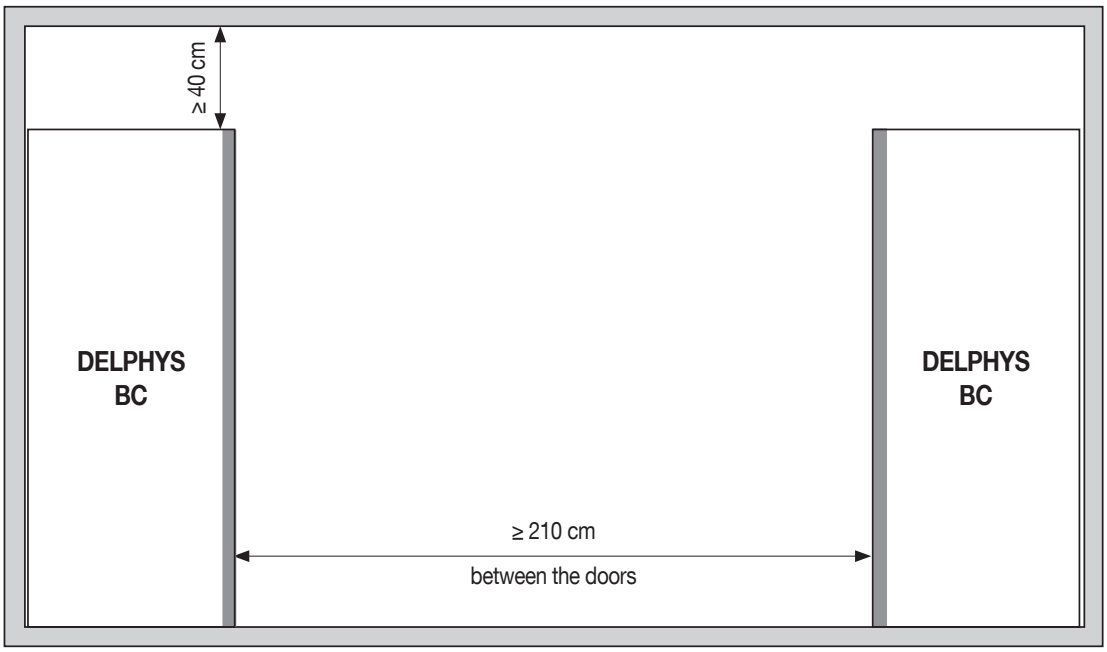

- Several cabinets can be installed adjacent to each other (figure 4.2-1).
- Two DELPHYS BC 160-200 kVA can be installed back to back (figure 4.2-3).
- Observe the direction of the ventilation flows (figure 4.2-4) and heat dispersion flows (figure 4.2-5). See chapter 9 for the technical specifications relating to the required ventilation values.

In order to profit from an optimal ventilation, the side panels must remain in place

4.2-2

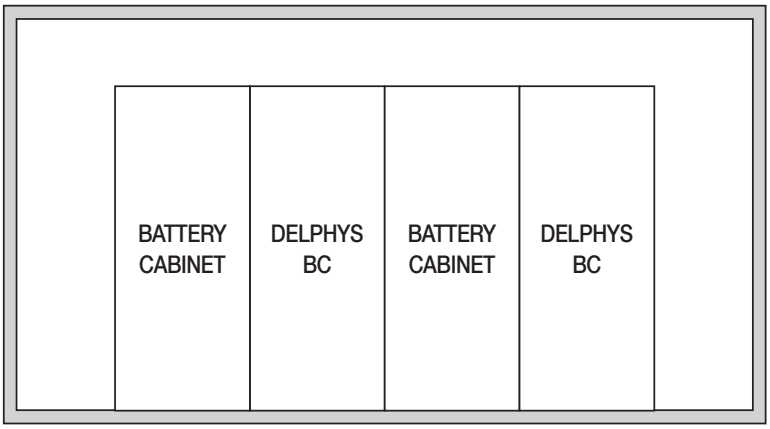

4.2-3

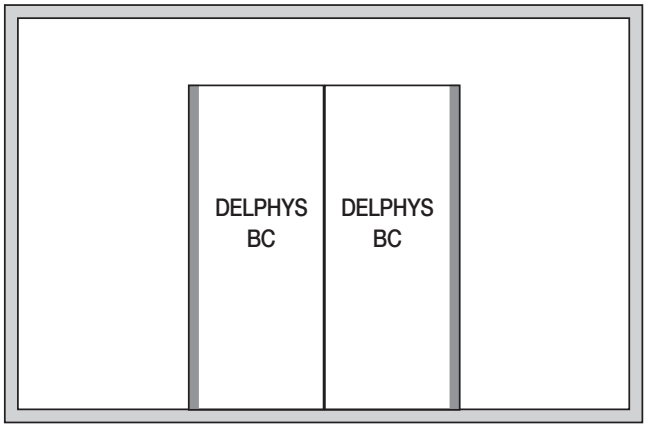

4.2-4 Ventilation.

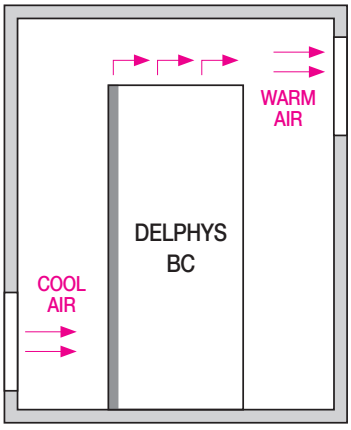

4.2-5 Climate control.

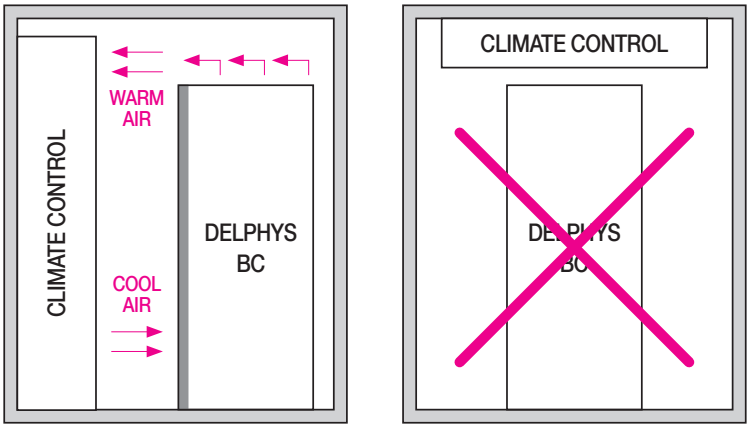

For fixing on the floor, see § 5.6 and § 10.1 Plan 1

socomec Innovative Power Solutions

4. 2.1. Installation on raised flooring

If Delphys BC is to be installed on raised flooring, the SOCOMEC adjustable frame (figure 4.2.1-1) must be used to support the weight of the unit (figure 4.2.1-2).

Refer to the relevant installation manual provided in the packaging for information on frame assembly operations.

Allow for small openings in the floor panels to ensure the air flow at the front (figure 4.2.1-3).

4.2.1-1

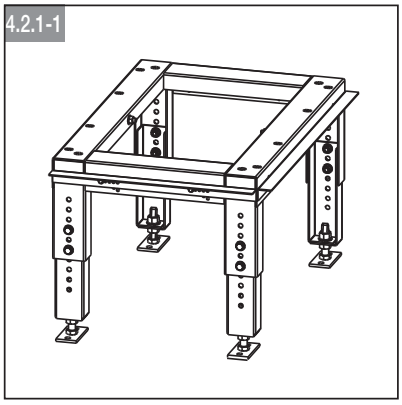

4.2.1-2

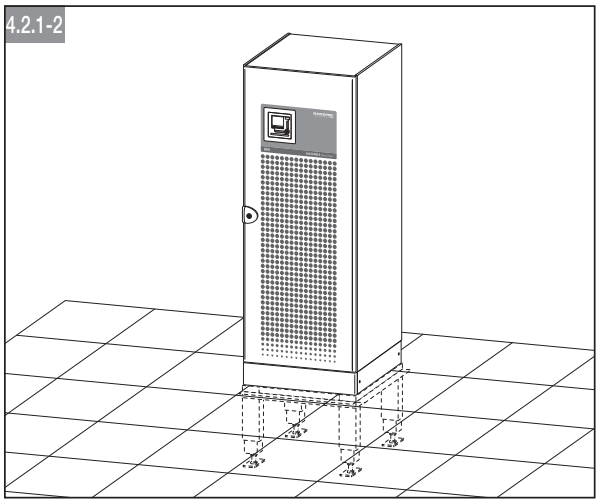

4.2.1-3

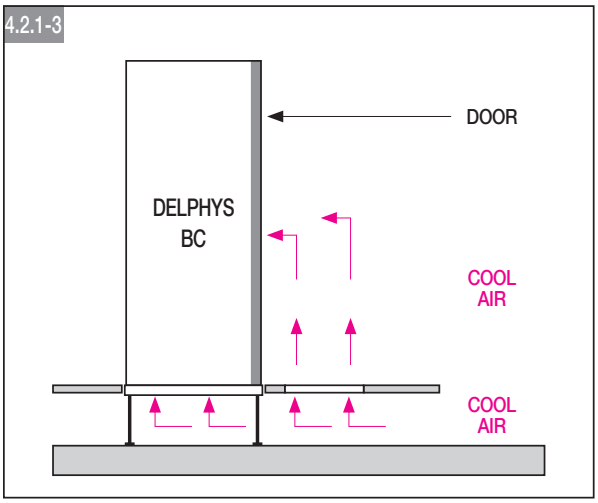

4. 2.2. Installation over a tunnel

4.2.2-1

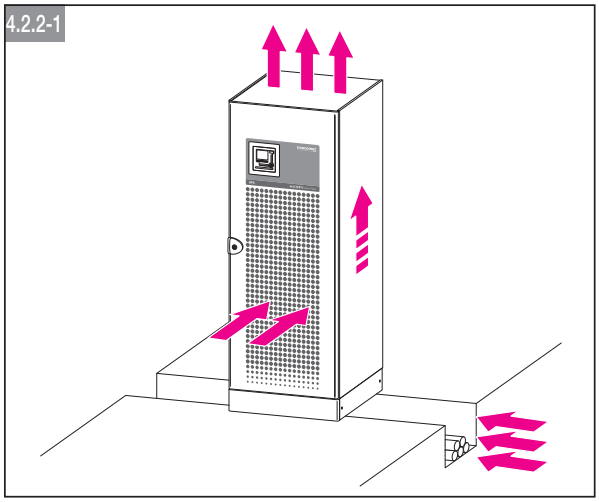

4. 2.3. Heat loss and ventilation characteristics

kVA	Air flow		Total air flow	Heat losses at full load MAX. Nominal condition / worst conditions	
	Bottom	Mid height		W	BTU/h
UPS 160	45 %*	55 %*	2250 m3/h	9200 / 10600	31391 / 36168
UPS 200	45 %*	55 %*	2250 m3/h	11500 / 13300	39239 / 45380

* of Total air flow

4. 3. General rules for cable installation on tray

The cables must be in installed on trays when indicated in the following diagrams. The trays must be positioned near to Delphys BC.

All metal and suspended ducts or those in raised flooring MUST be connected to earth and to the various cabinets.

4.3-1 Correct installation.

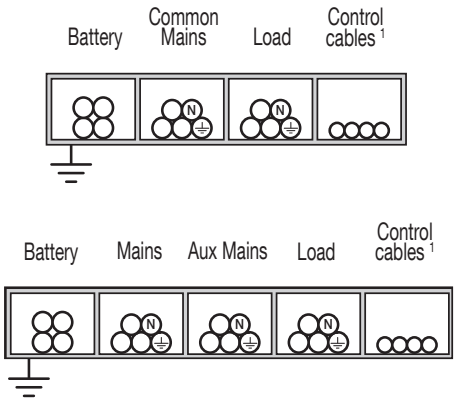

4.3-2 Allowed installation.

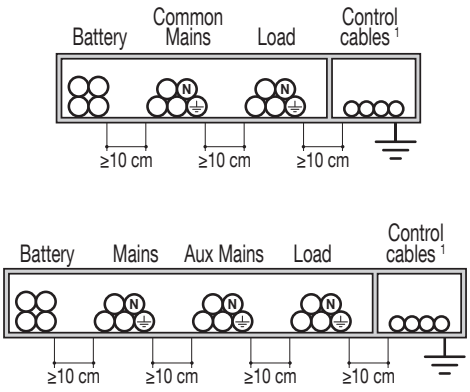

Risk of electromagnetic interference between battery cables and output cables.

4.3-3 Wrong installation.

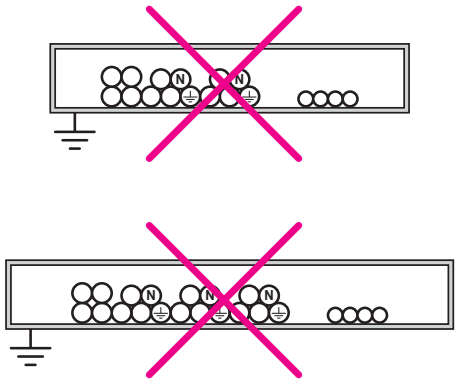

[1] Control cables: connections between the cabinets and each unit, alarm signals, remote mimic panel, connection to the BMS (Building Management System), emergency stop, connection to generator.

Do not expose control and power UPS cables to other equipment sensitive to the electromagnetic field.

4. 4. Electrical requisites

The installation and the system must comply with national plant regulations. The electrical distribution panel must have a protection and sectioning system installed for the input mains and the auxiliary mains. If a differential switch is installed on the mains power switch (optional), it must be inserted upstream from the distribution panel.

socomec Innovative Power Solutions

ENGLISH

4. 5. External connections

Risk of electrocution !

- Only qualified and authorized personnel are allowed to intervene on the product.
- The instructions are valid in conjunction with the specific instructions of the product.
- The product is designed only for the application specified in the operating instructions.
- Accessories can be used with the product only if approved or specified by SOCOMEC.
- Before proceeding with the implementing, mounting, commissioning, configuration, cleaning, decommissioning, dismounting, wiring or maintenance operations, the product and the installation must be powered off. However, specific instructions for a product may allow live intervention under certain conditions, means, qualifications and authorizations.
- The product is not destined to be repaired by the user.
- Contact SOCOMEC for any questions regarding the disposal of the product.
- **Failure to follow the product instructions and this safety information may result in personal injury, electric shock, burns, death or property damage.**

4. 5.1. Connecting earth cables

IMPORTANT : due to EMI filters*, there are "HIGH LEAKAGE CURRENTS".

As a consequence, it is imperative to connect earth cables before mains cables.

* EMI filters = protection against electromagnetic disturbances.

4.5.1-1

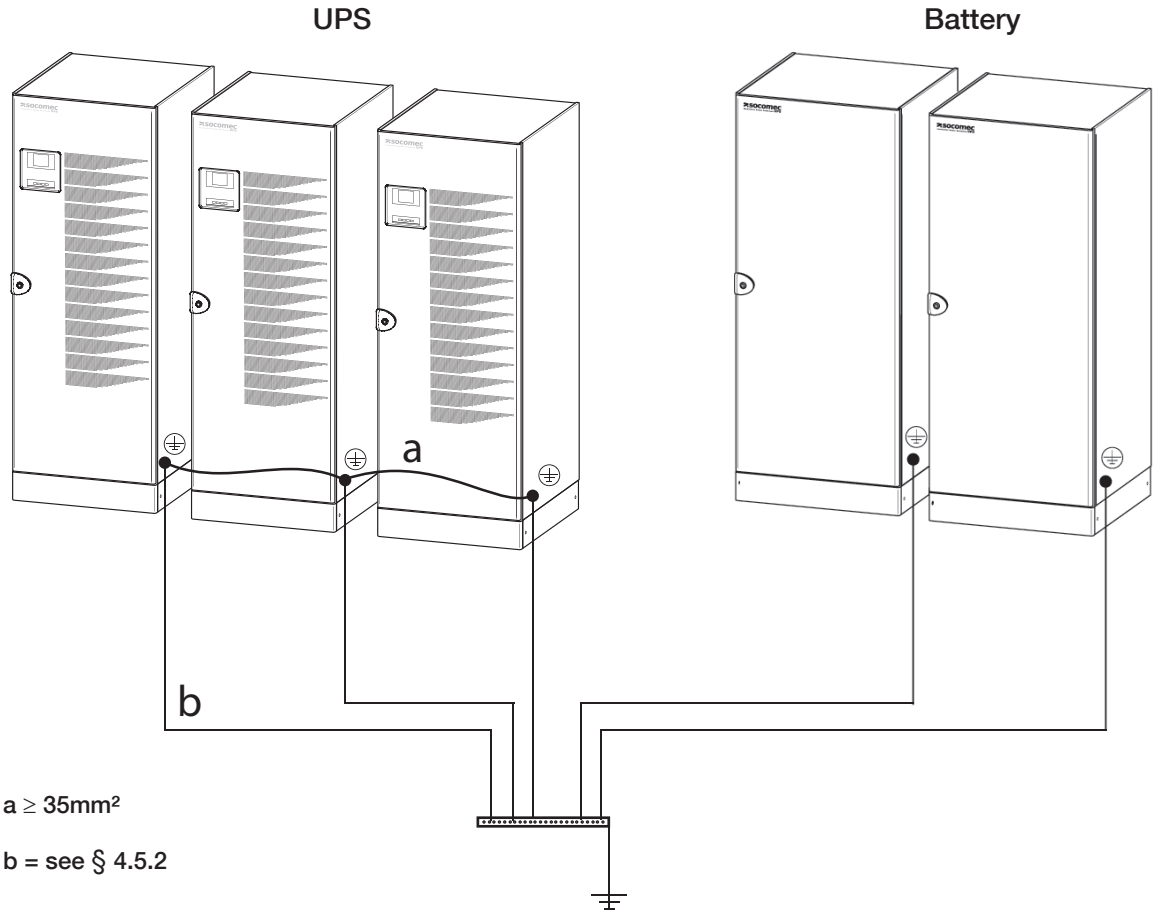

a ≥ 35mm²

b = see § 4.5.2

The grounding of the auxiliary cabinets must be made directly to the reference earth.

Never use the UPS cabinet as earth terminal building.

4. 5.2. Earth cable cross-section

We recommend a section of ground wire at least half of the section of cable phases AND comply with standards of the country (for example NFC 15100 in France).

4. 5.3. Leakage current (rating of the earth leakage current device)

The minimum "off-delay relays" recommended is 3 A .

4. 5.4. Earthing systems and UPS (TT consult us)

In TNC: UPS output neutral must be grounded.
In TNS: when opening a 4 phases switch between UPS output and transformer upstream of the bypass, system grounding must be present to reference the neutral to ground.

4. 5.5. Neutral cable cross-section

It is necessary to check:
a) the minimum cross-section of the neutral cable must equal one of the phase conductors.
b) the balancing of the loads across the three phases,
c) the values that will trip the protective devices.

4. 6. Values of currents for cable sizing

NOTE : these values are only indicative for standard systems.

4. 6.1. Input rectifier currents for Delphys BC

Operating conditions are as follows:
- Input/output power supply voltage 3x400V,
- UPS is operating at rated power and batteries are recharging.

POWER on UPS output	Max. rectifier input current (A)*
160 kVA/ 144 kW	290 A
200 kVA/180 kW	340 A

* Regardless of the conditions (battery recharge, overload, voltage...)

4. 6.2. Mean current supplied by the battery when discharging

The mean current value is to be taken into account for sizing connecting cables between the battery and UPS.

UPS Power	160 kVA / 144 kW	200 kVA / 180 kW
Currents (A)	405A	504 A

4. 6.3. Bypass current (or output current to the load)

Operating conditions are as follows:
- input/output power supply voltage 3x400V (For other voltages 380 or 415 V, the current values must be multiplied by 1.05 and 0.96 respectively),
- UPS is operating at rated power.

UPS (kVA)	160	200
Currents (A)	231	289

socomec Innovative Power Solutions

Note: sizing of cables and protections upstream of the bypass shall take into account:

- overloads caused by non-linear loads,
- possible overloads admitted by Green Power 2.0 i.e.(400V / 50Hz, 27°C):

UPS (kVA)	160	200
1 hour	110 %	110 %
10 minutes	125 %	125 %
2 minutes	200 %	200 %

4. 7. Sizing of circuit breakers

4. 7.1. Rectifier input circuit breaker

Values are only indicative as per the following conditions:

- the rectifier and bypass input voltage is 3x400V overload 150 %
- the length of cabling between the circuit breaker and UPS is <10 metres.

UPS Power	160 kVA / 144 kW	200 kVA / 180 kW
Sizing of circuit breaker	315 A	400 A

Note: the sizing of circuit breakers takes into account a possible overload rate of 150%.

4. 7.2. Circuit breaker on bypass input

Values are only indicative as per the following conditions:

- the rectifier and bypass input voltage is 3x400V overload 150 %
- the length of cabling between the circuit breaker and UPS is <10 metres.

Power kVA	UPS 160	UPS 200
Sizing of circuit breaker	400 A	400A

Note 1: the admissible input voltage tolerance is +/-10% - the sizing of circuit breakers has therefore to be adjusted accordingly.

Note 2: the protection on the bypass input is intended for cable protection and does not take into account the I^2T of thyristors.

Nota 3: Ensure that the circuit breaker trigger curve takes into account a possible overload

4. 7.3. Circuit breaker on a common rectifier and bypass input

Values are only indicative as per the following conditions:

- the rectifier and bypass input voltage is 3x400V,
- the length of cabling between the circuit breaker and UPS is <10 metres.

UPS Power	160 kVA / 144 kW	200 kVA / 180 kW
Sizing of circuit breaker	400A	400A

Note: the admissible input voltage tolerance is +/-10% - the sizing of circuit breakers has therefore to be adjusted accordingly.

4. 8. Backfeed protection

Delphys BC is preset for the installation of external protection devices against the backfeed of dangerous voltages on the auxiliary backup mains power supply line (AUX MAINS SUPPLY), the input power supply line (MAINS SUPPLY) is already equipped in internal.
In the event that the equipment does not have a voltage protection device, warning labels must be affixed on all mains power disconnectors installed away from UPS area, in order to remind support personnel that the circuit is connected to a UPS (see also § 2 “Safety” of this manual and paragraph 4.9.3 of standard IEC 62040-1 2008). The label is supplied with the equipment.
If, in certain anomaly states, or because of the installation upstream (e.g. undetected and protected earth fault, or high leakage in a phase, or with IT systems) there is a hazardous potential on neutral, a suitable isolating switch must be provided on the neutral as well, or else there must be a detection, signalling and protection system).
For the connections, see to § 5.14.

4. 9. Protection and cross-section of battery cables

Values are provided for a distance of 5 meters between UPS and the battery. (Battery mean current while discharging – Please see § 4.6.2). Use double insulated cables BN4-F.

CAUTION: The size of protections depends on the power and back up time of the system. Protections other than the ones defined below may cause electrical hazard or damage to the equipment.

Exemple of Ur fuse battery protection[1], block type 90 Ah: SWL2500, XP12V3000, exept[3]

Max Power UPS output	Backup time	branches Number	blocks Number[4]	Ur Fuse Number	Size of Ur fuse	Icc mini batterie[5]	Ferraz Code	Socomec Code	min. Cross-section[2]
160 kVA 144 kW	5 min	1	37	2x2	160A T2	1720	K322469C	E045968	95
	17 min	2	36	2x2	250A T2	3140	R322475C	E045988	120
	31 min	3	36	2x2	250A T2	3140	R322475C	E045988	185
160 kVA 128 kW	9 min	1	43	2x2	160A T2	1720	K322469C	E045968	95
200 kVA 180 kW	4 min	1	43[3]	2x2	200A T2	2400	M322471C	E045978	120
	15 min	2	41	2x2	250A T2	3140	R322475C	E045988	120
	27 min	3	40	2x2	250A T2	3140	R322475C	E045988	185
200 kVA 160 kW	5 min	1	41	2x2	160A T2	1720	K322469C	E045968	95
	15 min	2	37	2x2	250A T2	3140	R322475C	E045988	120

[1] not standard Fuse protection FUSOMAT SOCOMEC, please contact us
[2] for a 5 meters distance between the UPS and the battery
[3] 100Ah : XHRL12410, FLB400
[4] see 5. 11.1

Circuit breaker Battery protection (≤ 39 blocs)

Definition for 36 to 39 blocs						
DELPHYS Power	Backup time	Number of Contact in serie	Size of breaker	Size of trigger	Magnetic adjustment Im = nxIn	ICC battery[5] > Im > Imax discharge
180 kW	≤ 60 mn	2	T5N630 4P Fixe	TMG 500A	2.5	1600A

⚠ [5] end of life

socomec Innovative Power Solutions

5. INSTALLATION

5. 1. Dimensions and weight (Overall)

	UPS 160 kVA	UPS 200 kVA
Height (mm)	1930	
Width (mm)	707	
Depth (mm)	845	
Weight (kg)	480	500

5. 2. Unpacking procedure

5.2-1

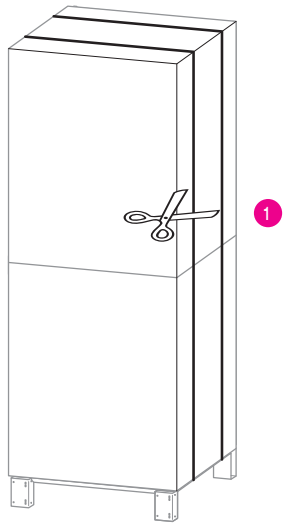

5.2-2

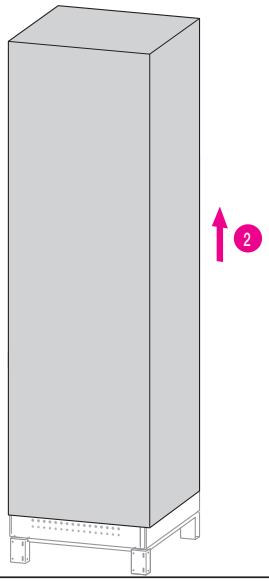

5.2-3

Place Delphys BC in the installation area.

5.2-4

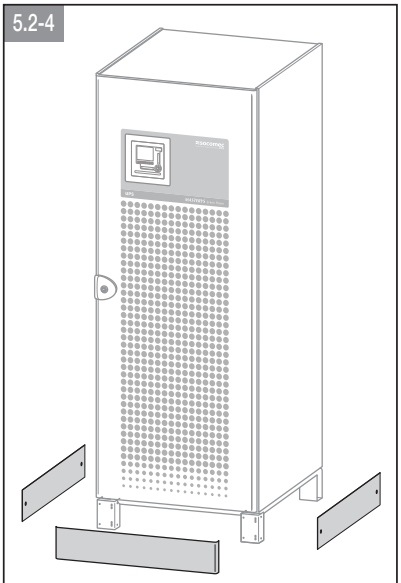

Refer to § 5.3 if the equipment has to be moved from above.

All packaging material must be recycled in compliance with the laws in force in the country where the system is installed.

ENGLISH

5. 3. Moving

5.3-1

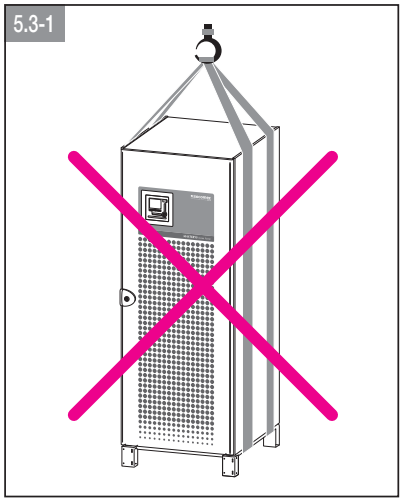

When being moved, the cabinets must be kept in an upright position.

Never use harnesses!

5. 3.1. Moving with belts

- Length of belts: ≥ 150 cm
- Lifting eyebolts (supplied on request): internal ø 30 mm, thread M12.

Lift and handle the cabinets with the utmost care and without jerking!

5.3.1-1 Remove screws A.

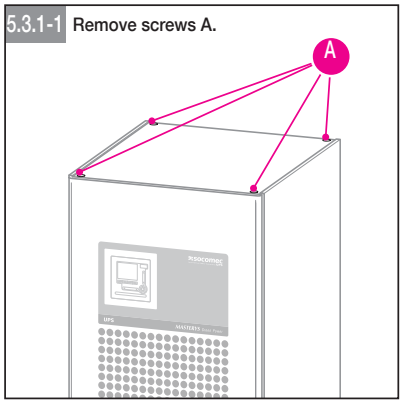

5.3.1-2

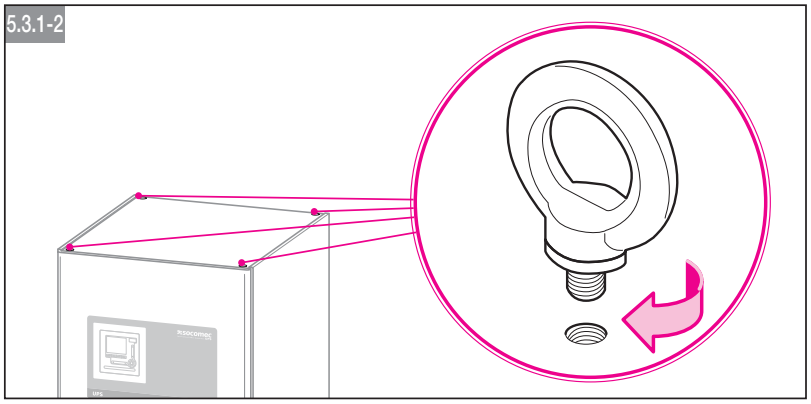

socomec Innovative Power Solutions

5.3.1-3

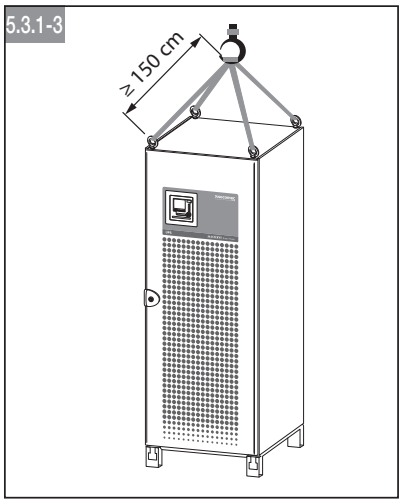

5.3.1-4

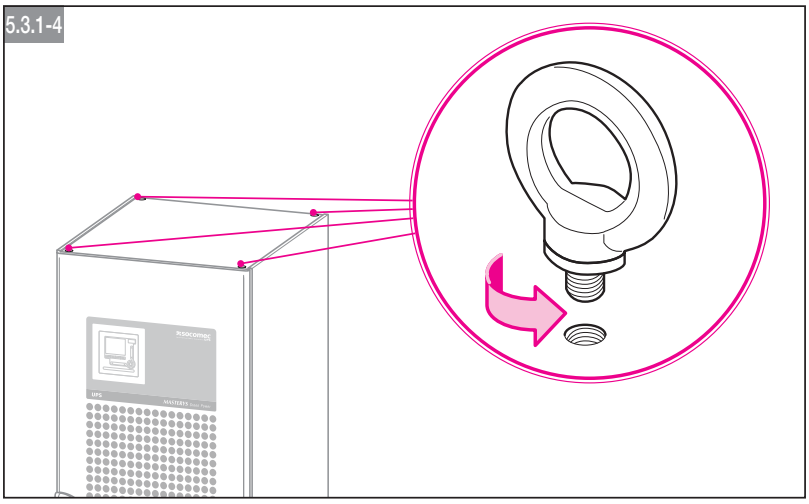

5.3.1-5 Tighten screws A.

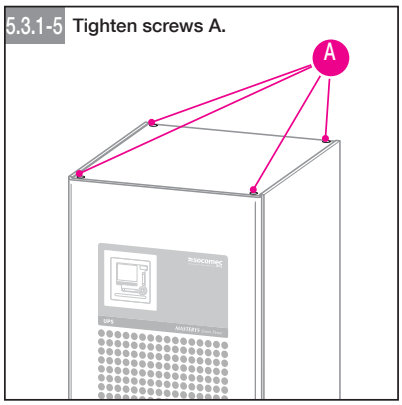

5. 3.2. Moving with lifting truss.

If the height of the ceiling does not allow the use of belts, Delphys BC can be moved using lifting trusses.

5.3.2-1

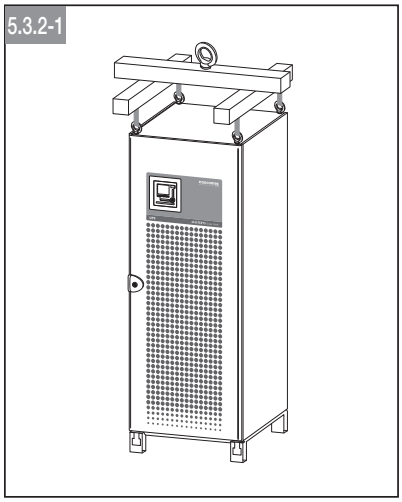

5. 3.3. Handling from underneath

Remove the grilles on the front and rear of the cabinet and introduce the fork under the unit.

HANDLING FROM THE FRONT OR THE REAR

5.3.3-1

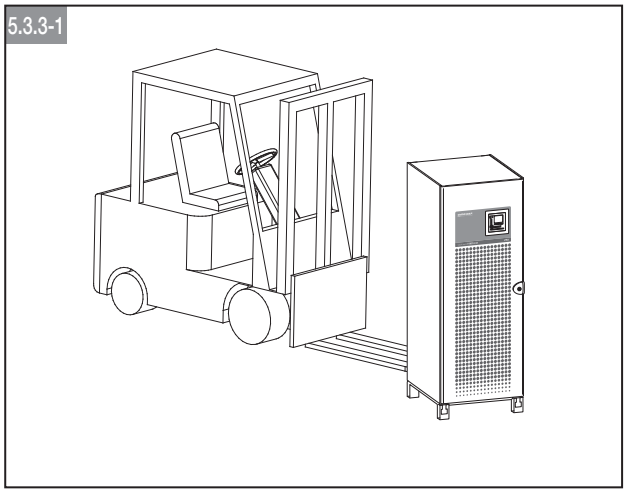

LATERAL HANDLING

Lateral handling is also possible, provided that the bottom side panels are removed.

5.3.3-2

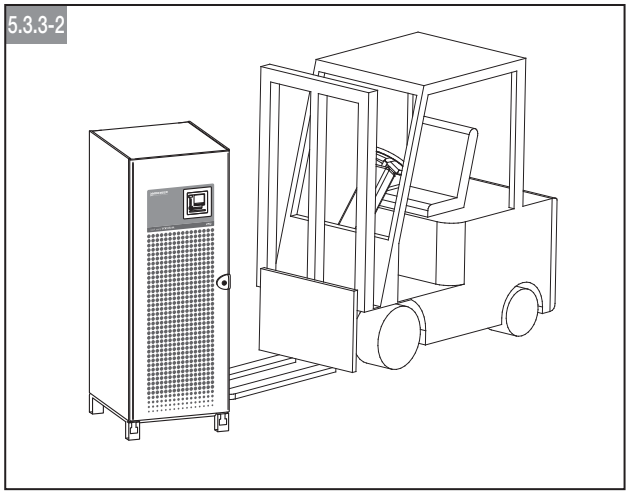

Given the cabinets are heavy, handling using a pallet truck on slopes or ramps –even only slightly inclined, is hazardous and can cause severe accidents.

Take all required precautions and use adapted means and tools.

5. 3.4. Handling of battery cabinet

HANDLING FROM UNDERNEATH

Handling can be from the bottom using a lifting truck. Front, rear as well as side bottom panels are available on the top of the cabinet.

HANDLING FROM ABOVE

Handling can be by using 4 slings that are at least 1 meter long. The total weight shall not exceed 1500 kg, i.e. 375 kg per eye screw, so please adapt to the weight to be lifted accordingly.

5. 3.5. Dimensions and weights of the battery cabinet

Cabinet	800	1000
Maximum weight for transport (kg)	1700	1800
Maximum weight of blocks (kg)	1450	1500
Maximum weight per shelf (kg)	350	380
WIDTH (mm)	800	1 000
DEPTH (mm)		
- floor requirement	815	
- Overall dimensions with door handle	830	
- door, handle and rear panel excluded	800	
HEIGHT (mm)	1925	

5. 4. Cabinet positioning

To make transport and handling easier, the system is separated into cabinets (or cabinet sets).

The symbol on the front face indicates the separation points between the cabinets.

The individual cabinet position should correspond with sequence / numbers indicated on the front view of the system.

(The number of each cabinet is indicated on the right top corner on the inside of the door).

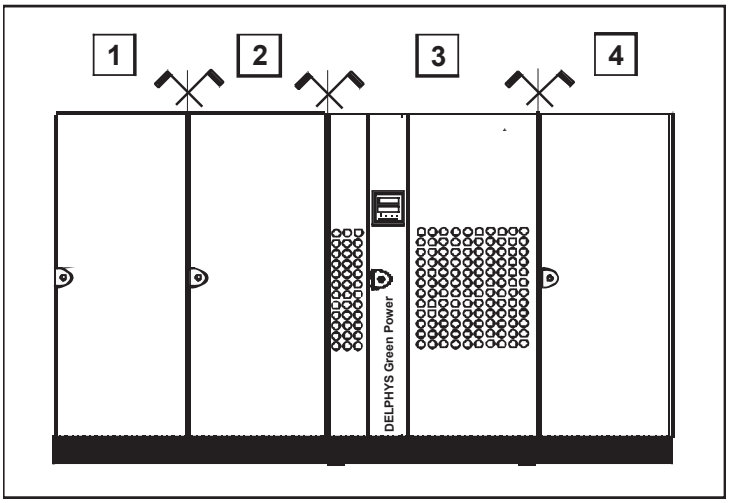

Note : reference should be made to the technical details in the drawing file.

5. 5. Battery cabinet installation

Each battery cabinet has two side reinforcement bars. After unloading, they must be removed to ensure proper ventilation of battery blocks. If the cabinet is provided with side panels, they shall be removed first.

For advice regarding safety, fixing to the floor of the cabinets and adjusting of fastening rods, please see § 5.7.

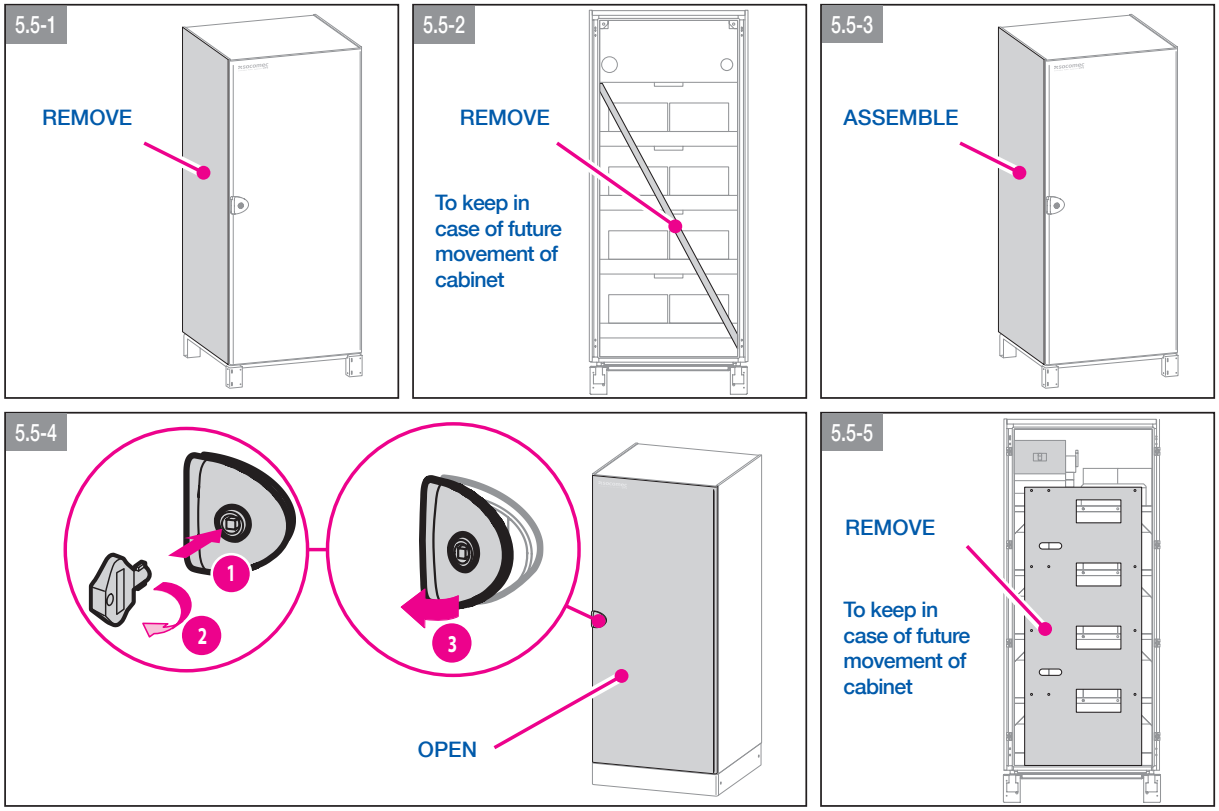

socomec Innovative Power Solutions

5. 6. Fixing to the floor (a raised floor or directly to the floor)

Each foot of the cabinet needs to be linked up to the metallic mesh network (if the cabinet is on a raised floor) or to have direct earth bonding (if the cabinet is directly positioned on the floor) by using short links with a cross-section ≥ 35 mm².
Use braidings to connect all the metallic feet of the raised floor and guarantee equipotential cabling.

5.6-1

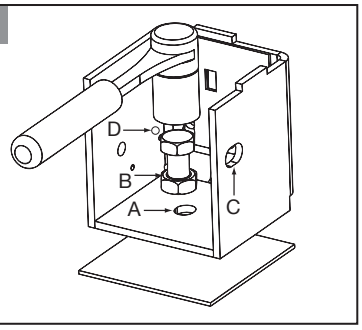

5.6-2

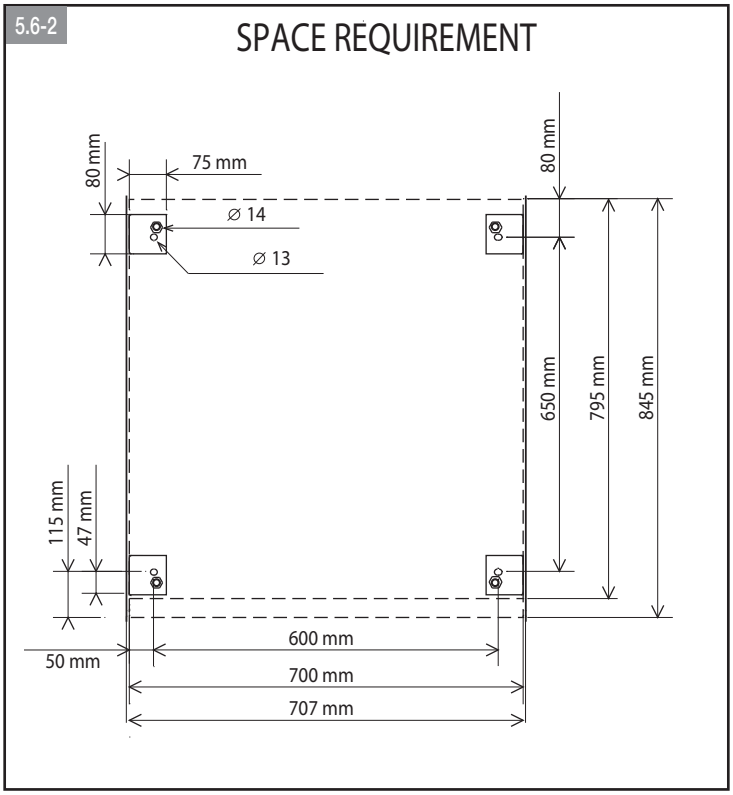

Each foot has a floor fixing hole (labelled A : ø 13) and welded nut for level adjusting (labelled B : screw THM 12 not supplied).

5. 7. Battery cabinets fixing

For batteries on racks or in cabinets, the cabinet must be fixed to the floor to prevent it from falling over. Each cabinet is fitted with pre-drilled feet - See dimensions below.

feet of battery cabinet: same as Delphys BC feet. (see § 10.3 Plan 3)

When the battery cabinet is installed, cut and remove the plastic fastening of battery cells in order to release the safety valve

5. 8. Separated cabinets

See § 5.4

5. 9. Identifying switching and connection organs

5.9-1

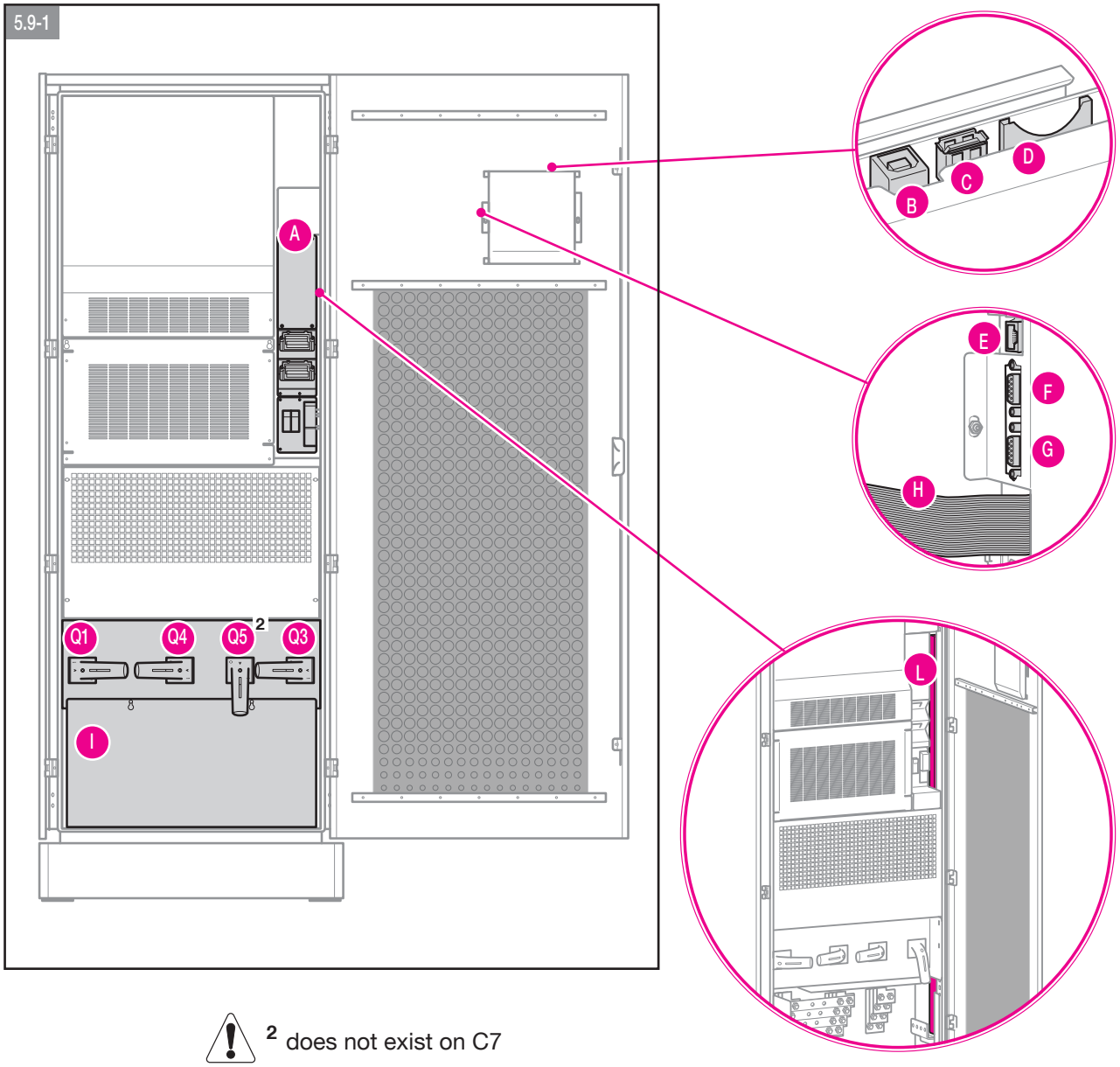

[2] does not exist on C7

Legend.

A Slot for optional communication cards.

B USB port.

C USB port.

D Slot for memory card.

E LAN RJ45 connector for Ethernet.

F Serial RS232 connector for CIM.

G Serial RS232 connector for Modem.

H Cable for power supply and communication signals

I Power connections.

L Cable trunking for control cables.

Q1 Input switch (MAINS).

Q3 Output switch.

Q4 Auxiliary mains Input switch (AUX MAINS).

Q5 Output manual maintenance bypass switch.[2]

socomec Innovative Power Solutions

ENGLISH

5. 10. Installation procedures and instructions

Before carrying out work on the terminal board or on UPS internal parts, ensure that Delphys BC is switched off, remove the power supply, open the external battery cabinet disconnectors, isolate the system and wait 5 minutes.

The connecting bars are made of copper!
Use only copper cables or cables with tinned eyelets for the connections.

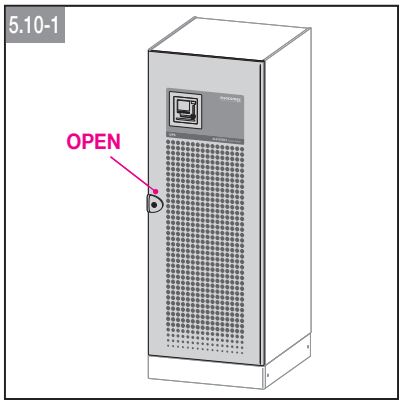

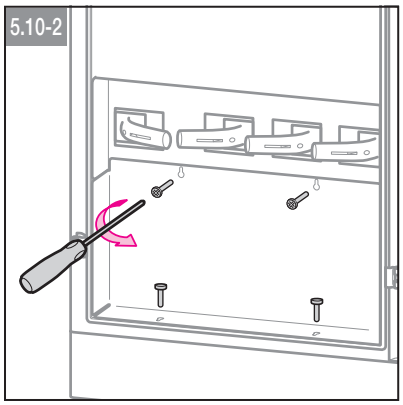

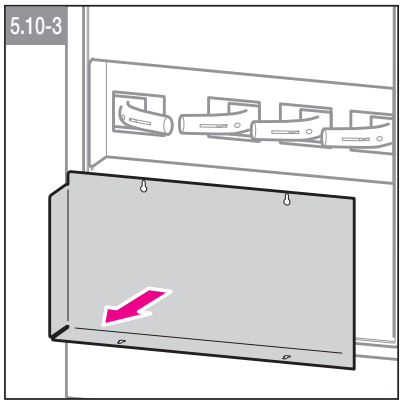

5. 10.1. Connections if the MAINS and AUX MAINS are connected IN COMMON

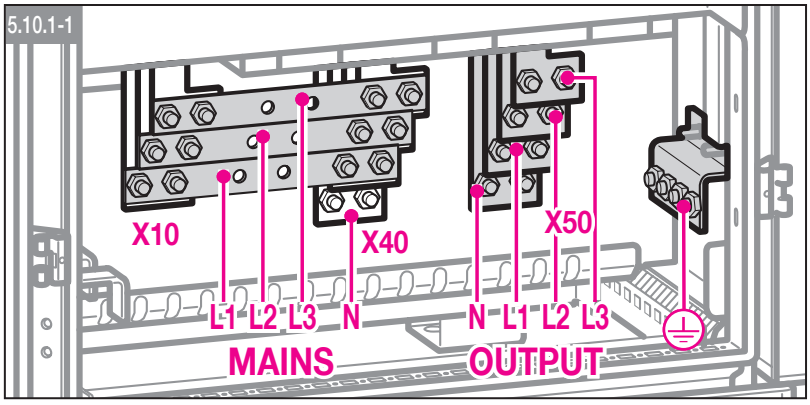

5. 10.2. Connections if the MAINS and AUX MAINS are connected SEPARATELY

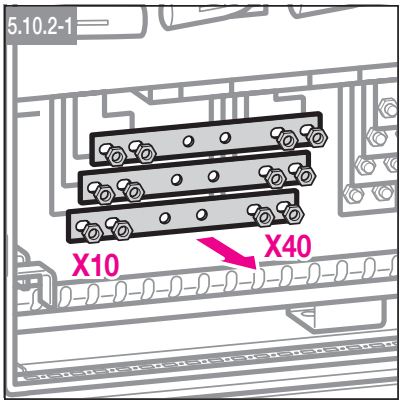

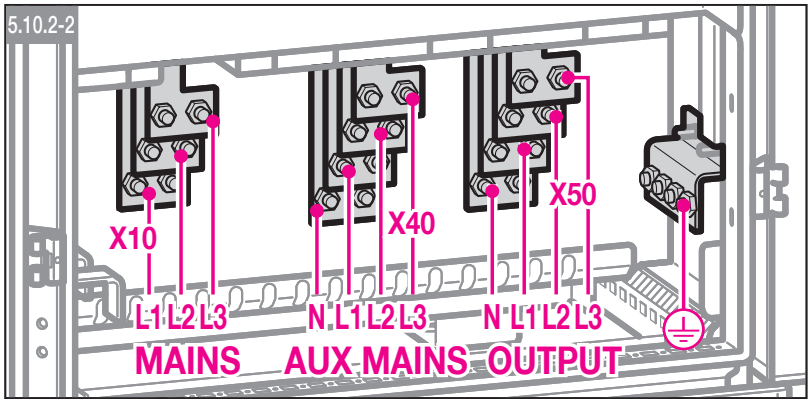

5. 10.3. External battery cabinet connection

Before carrying out any operation, ensure that:

- the battery fuses located inside the battery cabinet are open;
- Delphys BC is not live and all mains or battery switches are open;
- the switches upstream of UPS are open.

Use double insulated cables or the cables supplied with the unit to connect UPS to the Battery cabinet.

Cabling errors with inversion of the battery polarity may cause permanent damage to the equipment.

If using cabinets not supplied by the manufacturers of UPS, it is the installer's responsibility to check the electrical compatibility and the presence of appropriate protection devices between UPS and the battery cabinet (fuses and switches of sufficient capacity to protect the cables from UPS to the battery cabinet).

As soon as UPS is switched on (before closing the battery switches) the battery parameters must be verified accordingly (voltage, capacity, number of elements, ...) on the mimic panel menu.

5.10.3-1

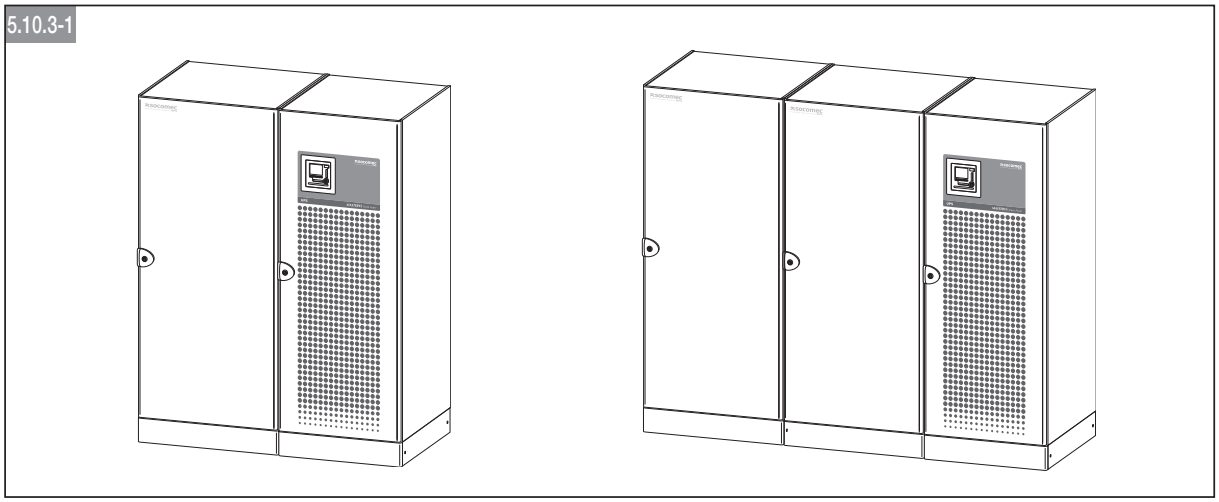

5.10.3-2 BATTERY STRING

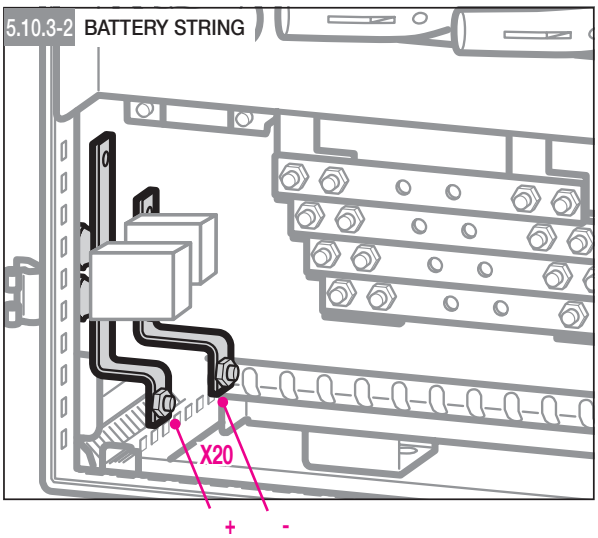

For safety reasons during transports and handling, batteries are disconnected at the level of each rack (or by sections not exceeding 150 V).
Take all necessary precautions when reconnecting the cables.

Connection must be performed by authorised staff, which have been previously trained. Connections to be performed are :

- grounding of battery cabinet,
- polarities + and – to the inverter,
- between battery sections and/or between shelves.

IMPORTANT:

Before closing the battery protection, be sure that the rectifier is started !

See the pictogram : the bar must be green.

socomec Innovative Power Solutions

5. 10.4. Replacement of batteries

When replacing the batteries, please use the same type and number of battery blocks.

Do not dispose of into a fire due to risk of explosion. Do not try to open or break up batteries. The electrolyte is toxic and may cause acid projections or injuries.

For this operation, we recommend that you contact a SOCOMEC servicing technician.

Battery reference and supplier shall be approved by SOCOMEC

For all the safety requirements of the battery installation, such as battery room ventilation, consult also the applicable international and local safety codes and standards.

ENGLISH

5. 11. Battery characteristics

5. 11.1. Technical specifications

Dimensions (WxDxH):	800x830x1925 1000x830x1925
Weight (with packaging):	< 1550 kg
Protection level:	IP 20
Operating temperature:	0÷40 °C (15÷25 °C recommended for longer battery life)
Storage and transport temperature[1]:	-5 °C ÷ +40 °C max (recommended 25 °C)
Relative humidity (condensation-free):	up to 95%
Battery recharging:	
Tambient ≤ 25 °C:	every 6 months
25 °C ≤ Tambient ≤ 30 °C:	every 4 months
30 °C ≤ Tambient ≤ 35 °C:	every 3 months
35 °C ≤ Tambient ≤ 40 °C:	every 2 months
Tambient > 40 °C:	not recommended
UPS output Power:	Battery block number:
200 kVA, P > 160 kW	from 39 to 43
200 kVA, P ≤ 160 kW	from 36 to 43
160 kVA, P < 144 kW	from 36 to 43

[1] General indication for the application of lead batteries. For further details, see the battery manufacturer's indications.

5. 11.2. Reliability

Conforms to Standards:	IEC 50272-2, IEC 62040-1-1

5. 11.3. Storage

The duration of storage batteries must not exceed 6 months in appropriate storage conditions. The batteries should be stored away from bad weather in space whose average temperature is between 30 °C and -5 °C, with a maximum temperature below 40 °C. A battery is Rechargeable considered without significant decrease in reliability, while his last refill does not date from more than 6 months.

5. 12. Terminal connections characteristics

	Designation	Copper termination	Ø hole	Screw	Max cross section	Torque Nm
PE	PE	125 x 5 mm	5 x 11	M10	2 x 240 mm²	40 Nm
X10	Rectifier input	63 x 4 mm	2 x 11	M10	2 x 150 mm²	40 Nm
X20	Battery input	40 x 5 mm	11	M10	2 x 240 mm²	40 Nm
X40	Bypass input	63 x 4 mm	2 x 11	M10	2 x 150 mm²	40 Nm
X50	Load output	63 x 4 mm	2 x 11	M10	2 x 150 mm²	40 Nm

5. 13. Connecting the battery cabinet temperature probe

5.13-1

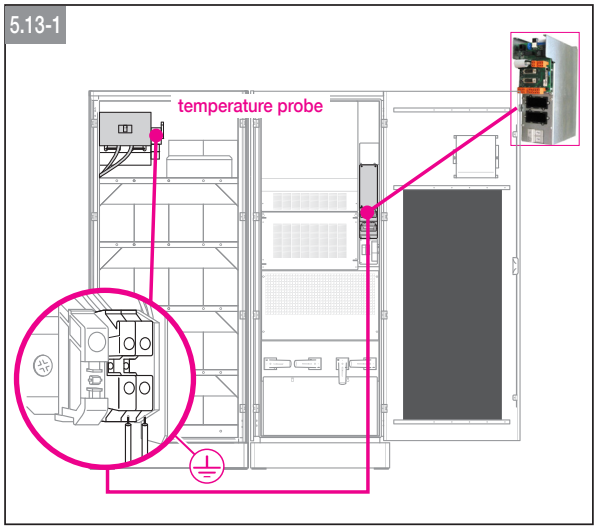

5.13-2

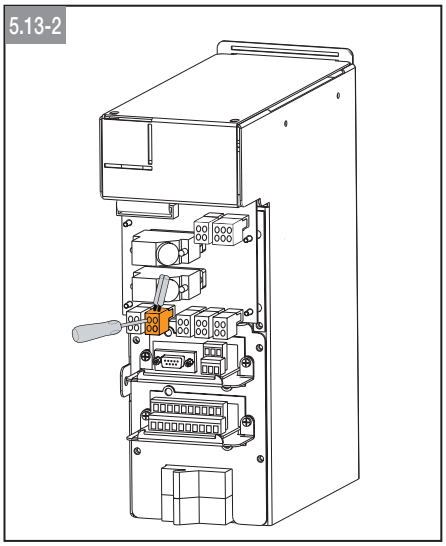

Battery cabinets on rack:

see § 5.17 Rack Slot.

- Use the specific kit available with Delphys BC.
- Fix the probe in the battery room or inside the battery cabinet.
- Connect the temperature probe as shown in figure 5.13-1 without cabling distance limits and without the need to observe polarity, by using a 2x1 mm² double isolation cable, XB5 1-2.
- In the event of a single UPS with several battery cabinets, use a single temperature sensor.
- In the event of parallel UPSs, connect the battery cabinet temperature sensors to the cards installed in the related UPSs.

socomec Innovative Power Solutions

ENGLISH

5. 14. Backfeed protection (UPS C1, module C6 / C7)

Standard:

The backfeed protection is compliant with standard IEC 62040-1.

Purpose:

The backfeed protection is for ensuring personnel safety against any risks of accidental energy return to the input circuit. the backfeed protection imposes the automatic opening of an switching device in case of a malfunctioning of the static switch.

Principle:

The backfeed protection consists of an electronic detection pcb internal to Delphys BC and an external electromechanical device for isolation from the power circuit. optionally, the backfeed protection device may be built into the system. for further details about the size of the protective device, please see § 4.7.

Label:

A safety label bearing the following advice is available in the equipment:

«ISOLATE DELPHYS BEFORE WORKING ON THIS CIRCUIT»

the operator shall stick the label on the electromechanical device for isolation from the power circuit.

5.14-1 Functional diagram:

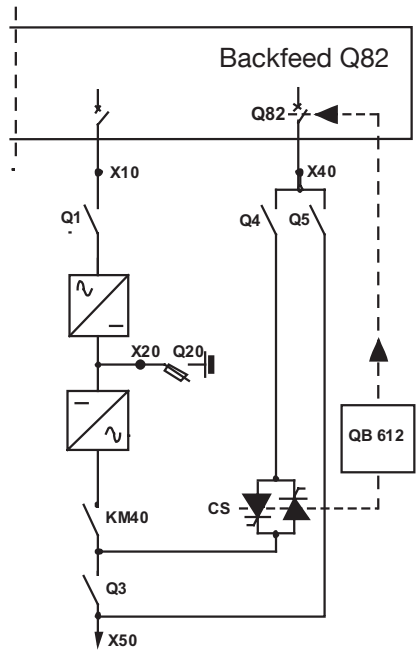

5.14-2 On PCB QB612:

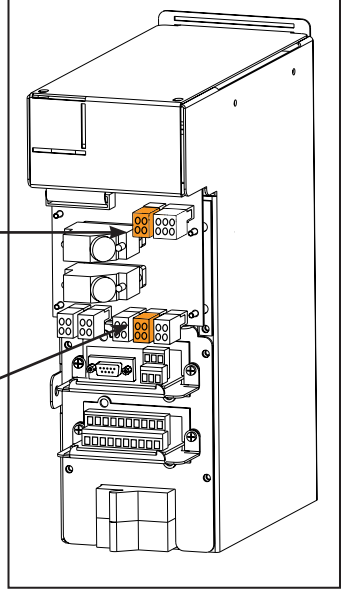

XB2 terminals 1-2: connection of the trip coil 220V-240V of the power isolating device.

XB7 terminals 1-2: connection of the auxiliary contact indicating the status of the power isolating device.

If contact 1-2 on XB7 is open, you will have an alarm, according to the Standard

5. 15. Automatic opening of battery protection Q20

The position "opening / closing" of Q20 is reported in XB6 in the rack slot (see § 5.17).

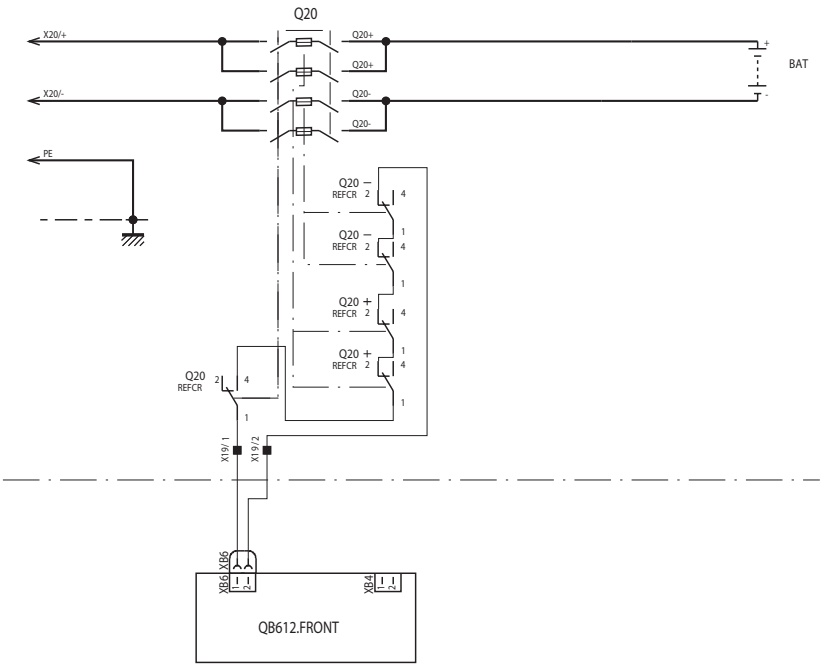

This option enables Q20 to be opened following an emergency shutdown or a slow discharge.

5. 16. Completion of the installation

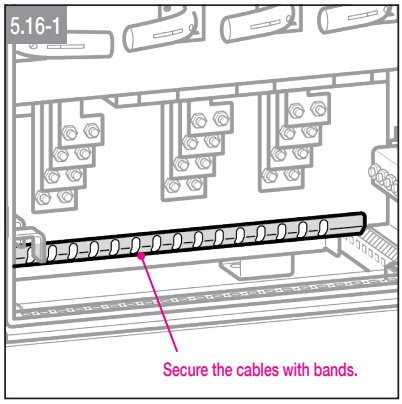

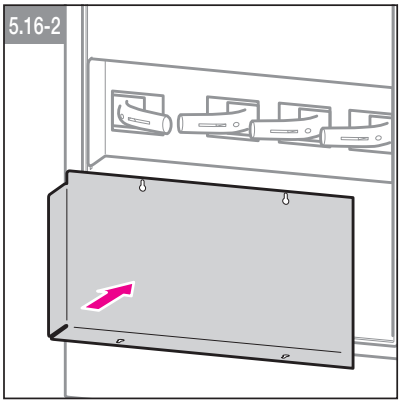

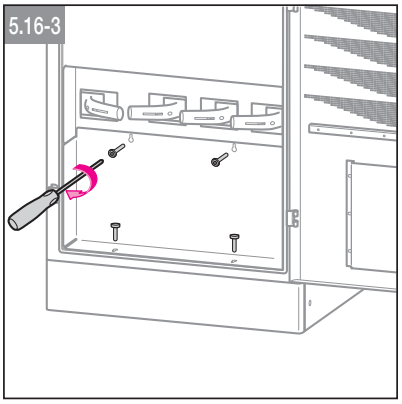

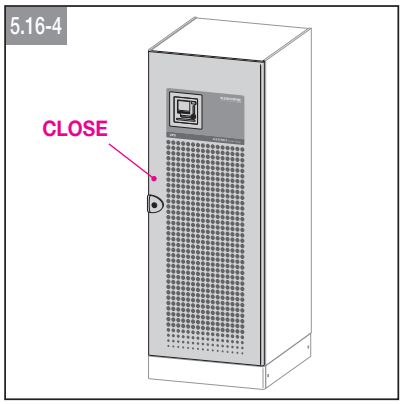

Do not forget to put back protective screens.

socomec Innovative Power Solutions

5. 17. Rack Slot

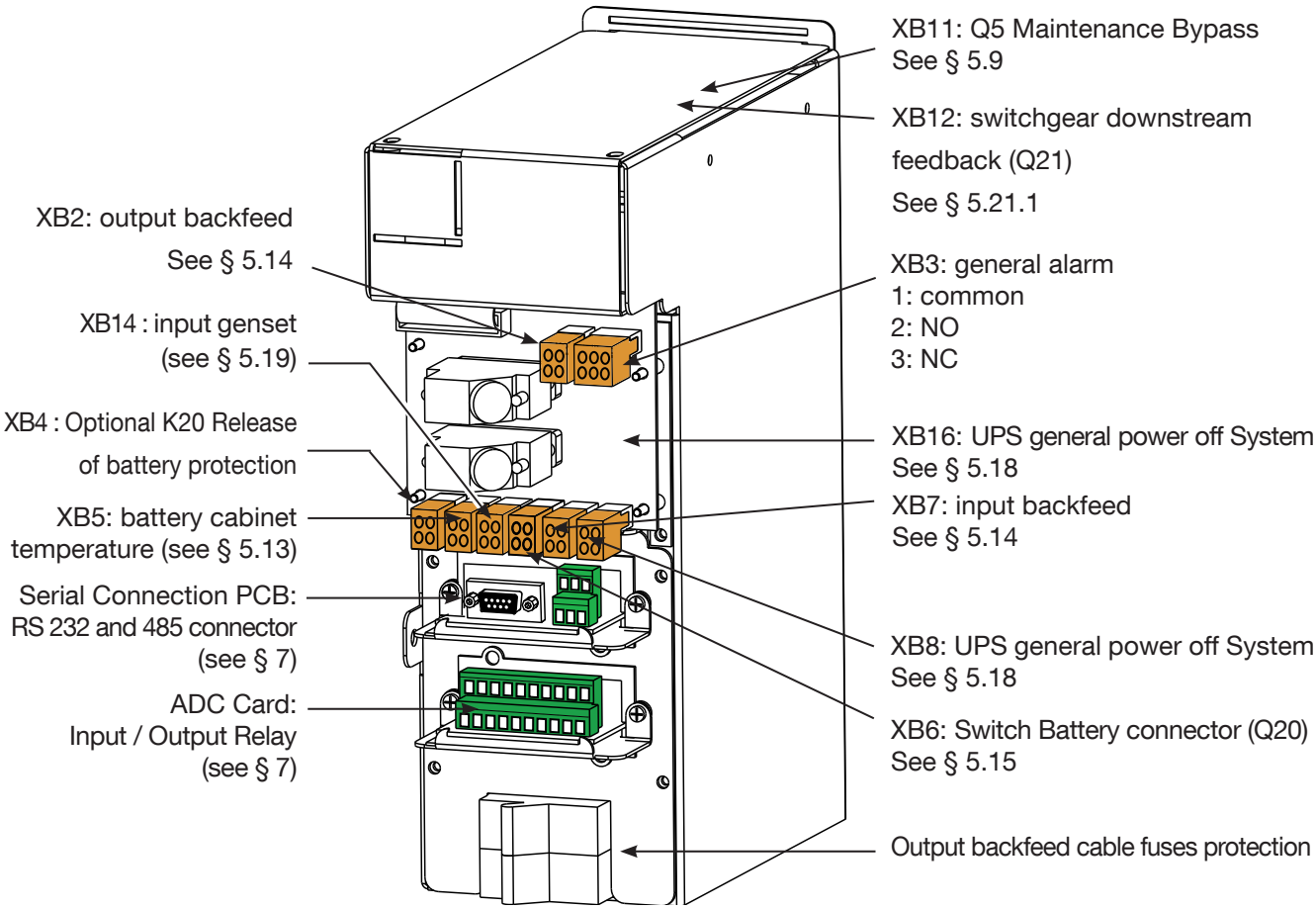

Connectors used depending on the UPS configuration:

Configuration / Connectors	C1	C6	C7
XB2: output backfeed	X	X	X
XB14: input genset	X	X	X
XB5: battery cabinet temperature	X	X	X
XB6: Switch Battery connector (Q20)	X	X	X
XB3: general alarm	X	X	X
XB7: input backfeed	X	X	X
XB8 / 16: UPS general power off System	X	X	X

5. 18. UPS GENERAL POWER OFF CONNECTION

UPS general power off system can be installed on the QB612 card (see § 5.17).
The UPS general power off causes:

- the load to be shutdown
- the rectifier, the inverter and the automatic bypass are shutdown but the **battery remains connected**.

In such a case, emergency switching conditions are not complied with. If required, an option provides for a trip coil, directly controlled by the UPS general power off which can be used to trip the battery protection device.
Connect a normally open, dry-switch contact to terminals XB8 1 and 2 on QB612 card **of each cabinet** (module and bypass, could be bridged).

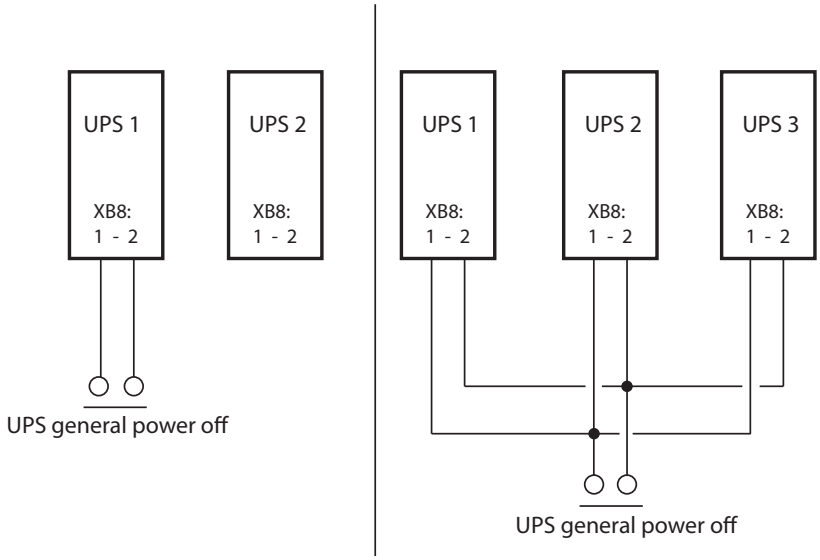

5. 19. CONNECTION OF THE GENERATOR (WHERE THERE IS THE BY-PASS)

A so-called GENERATOR SET information allows Delphys BC to operate according to genset conditions. The manufacturer can set some conditions for generator set operation, that is:

a. Stop the battery charger. In such a case, the corresponding input is on terminations XB14 1-2 on PCB QB612

b. Locked the bypass. The output frequency is come from internal clock. Transfer to the bypass automatic by pass isn't possible

c. Case of a modular system : each unit has to be connected to terminations XB14 1-2 on PCB QB612

d. Function a) and function b) through contact combination.

Without a specific request, the factory standard setting implies there is no action on UPS when the generator set is operating. Configurations mentioned above can be set at commissioning

5. 20. ISOLATION TRANSFORMER

If an external isolation transformer cabinet is required, the following instructions should be followed:

- Refer to § 5.3 and 5.4 of this manual for indications on moving and installing the cabinet.
- The protection cable marked with the ground symbol is connected directly to the distribution panel.
- The transformer can either be connected to UPS input or output.

If the neutral is not present on the input, please contact us

For details of the connections, refer to the transformer terminal board diagram on the UPS door.

5. 21. UPS PARALLEL CONFIGURATION

- Parallel connection enhances UPS system reliability, performance and power.
- Operating UPSs are connected to each other by a signal cable B (Fig. 5. 21.1-1) which provides 25m distance between UPSs and enables the external battery cabinet to be inserted next to each UPS. They are configured differently depending on the position they are assigned; for this reason the units have a position label:
  the "INTERNAL" label (used only on systems with three UPS) means that this unit must be positioned between the two other cabinets.
- The power supply of each UPS must be equipped with a protection device as shown in the table in § **4. 7**.
- The cross section and length of the input and output cables must be identical for all the units.
- The phase rotation must be the same for each unit connected in parallel and also on any external manual maintenance bypass line.
- Cables of the same length and cross section must be used for the connection between the general power switch A, the switches C and the respective UPS units. The length of the cables from A to each UPS module must not exceed 25 meters.
- The cables from UPS module to circuit breaker D must be of the same length.
- If a differential switch is installed on the mains power switch, it must be inserted upstream from the distribution panel; it must be a selective type and the trigger value must be 3A tempo by the number of UPS connected in parallel.

If other switchgear, switch or circuit breaker, are present downstream of the UPS module (see Fig. 5.21.1-1 point D), you must bring his contact position (Q21) on the UPS in the rack slot on XB12 (see § 5.17)

The opening and closing of the switch D should only be done only after stopping the unit UPS Delphys BC upstream of this switch.

- In order for units connected in a parallel configuration to operate correctly, control cables are required to exchange data between both UPS units making up the parallel system. The cables in question are supplied with UPS in case of standard parallel setting or are attached to the parallel kit in case of later upgrading of the system.

Parallel configuration must only be activated by SOCOMEC qualified personnel.

5. 21.1. Recommended 1+1 parallel configuration (C6 configuration)

5.21.1-1

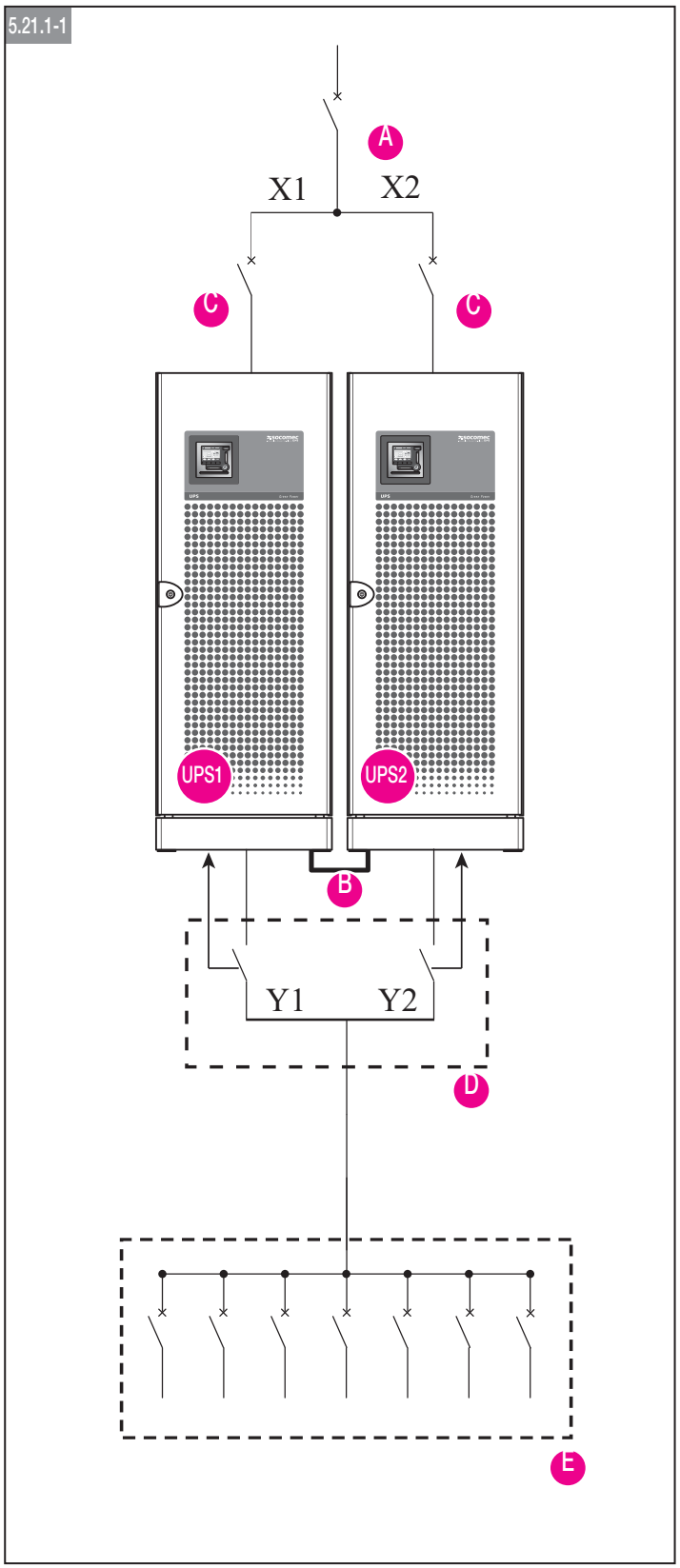

Legend.

A Selective general differential magneto thermal switch.

B "Parallel bus" cable.

C Single UPS magneto-thermal switch (if a separate auxiliary power source is used, add a magneto-thermal switch for each UPS).

D Additional disconnectors on the distribution panel (Q21, see § 5.21).

E Distribution.

X1 = X2 Y1 = Y2 ≤ 25m

socomec Innovative Power Solutions

1+1 Parallel configuration - Common Mains.

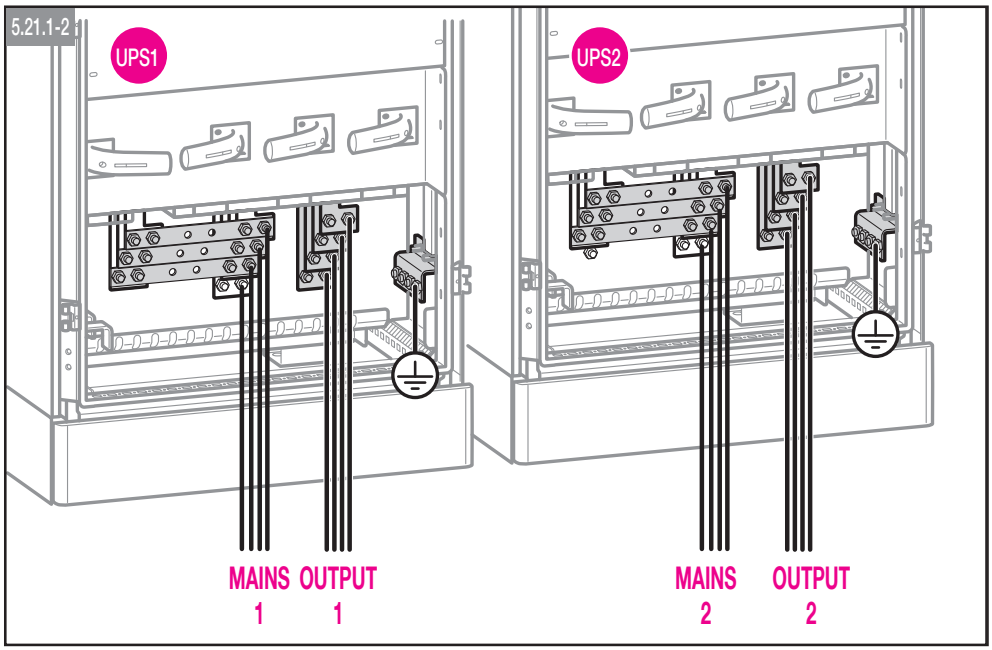

1+1 Parallel configuration - Separate Mains.

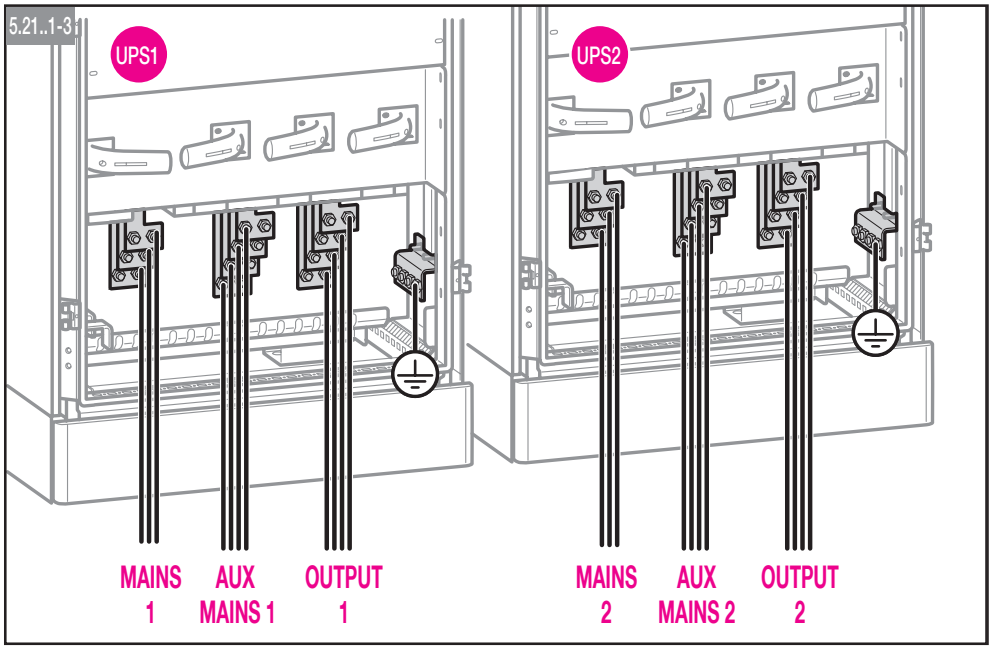

5. 21.2. Recommended N+1 parallel configuration (C7 configuration)

5.21.2-1

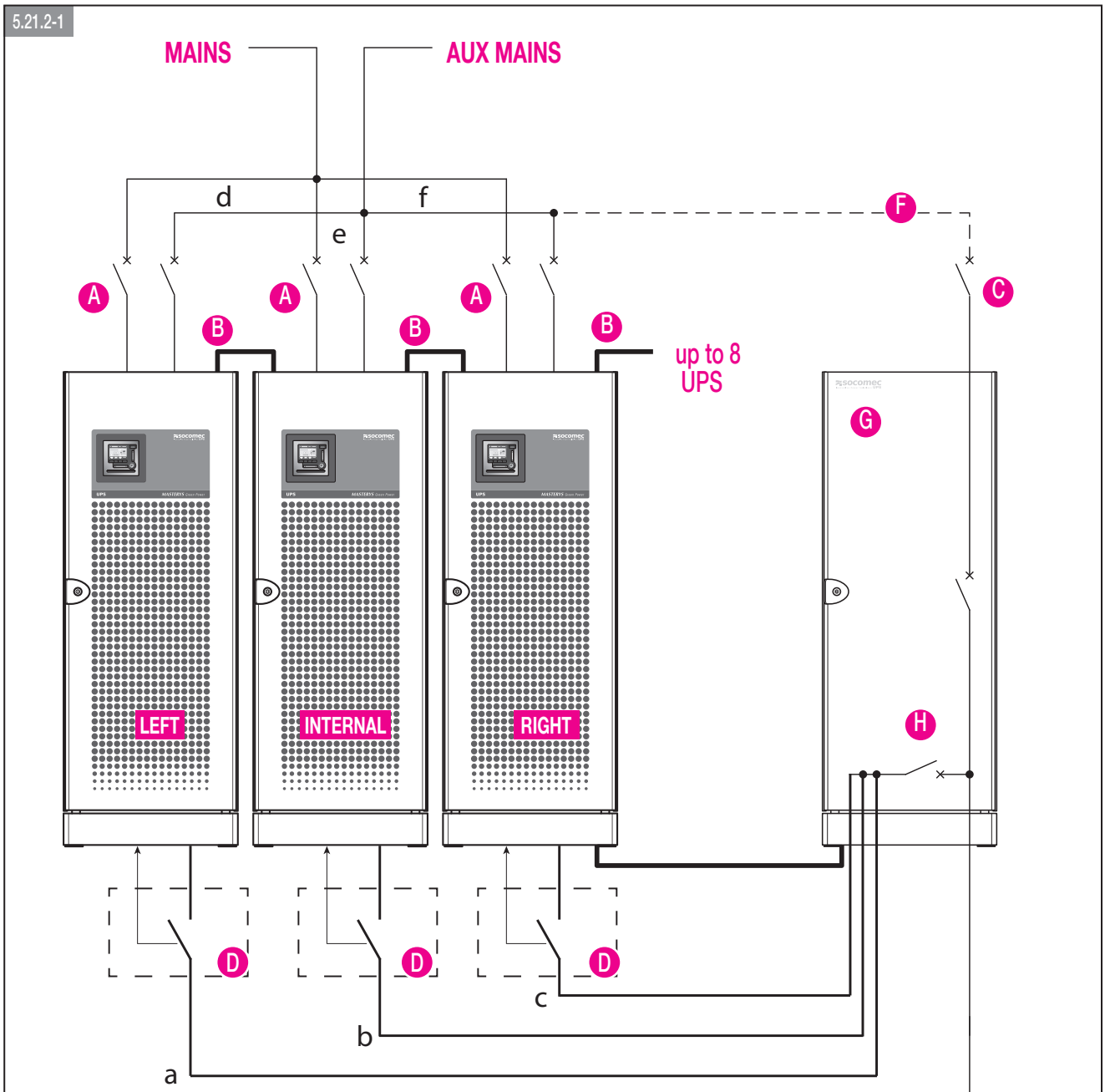

Legend.

A Single UPS magneto-thermal switch.

B "Parallel bus" cable.

C Coupling cabinet magneto-thermal switch. The value must be 722A x number of UPSs connected in parallel.

D Additional disconnectors on the distribution panel (Q21, see § 5.21).

E Distribution.

G Coupling cabinet.

H Manual maintenance by-pass auxiliary switch.

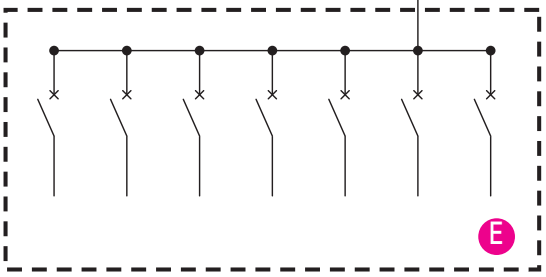

Length of cable:

a = b = c

d = e = f

socomec
Innovative Power Solutions

ENGLISH

N+1 Parallel configuration - Common Mains.

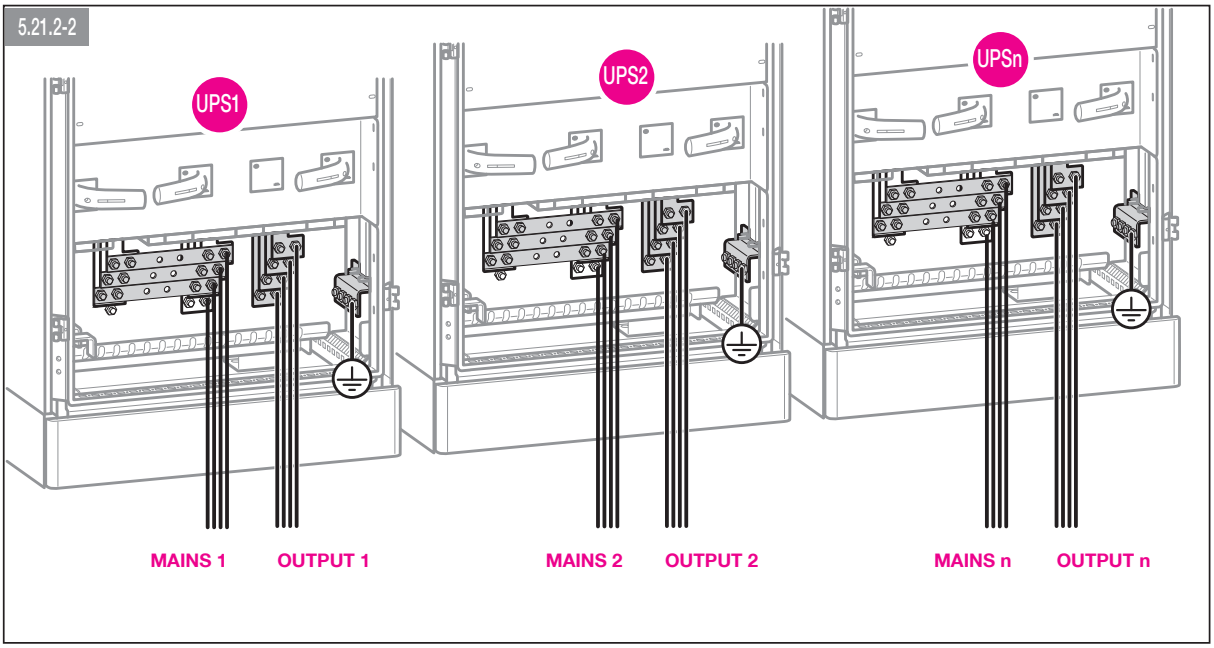

N+1 Parallel configuration - Separate Mains.

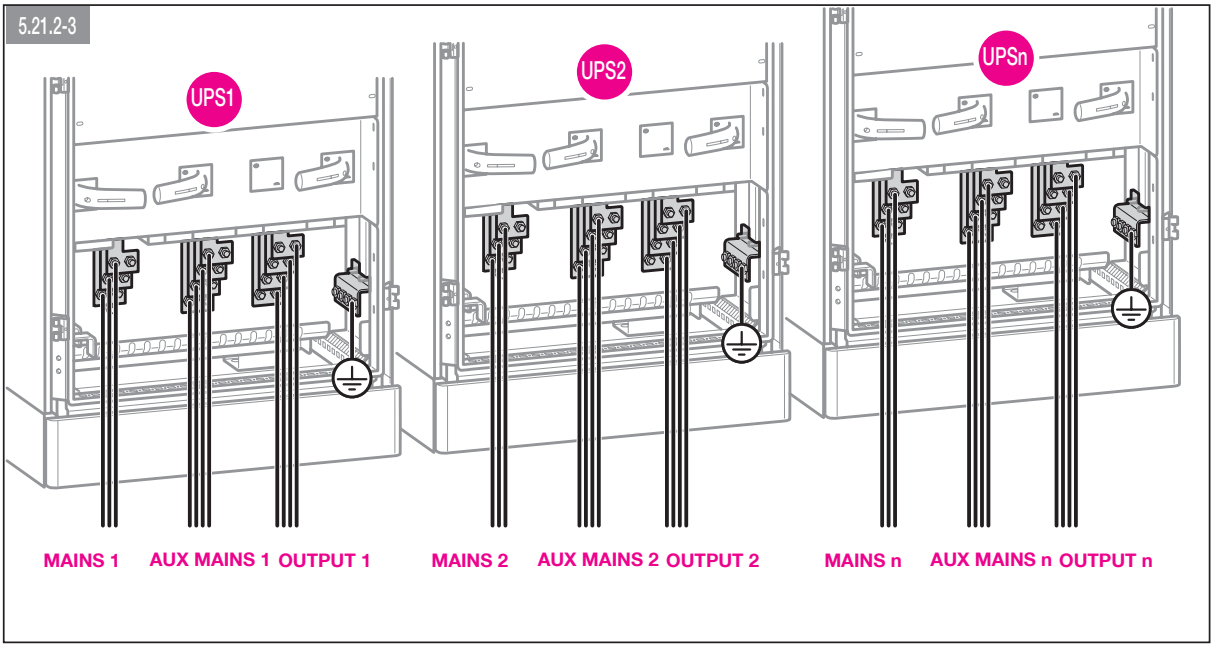

6. PREVENTIVE MAINTENANCE

All operations on the equipment must be carried out solely by SOCOMEC personnel or by authorised service personnel.

Maintenance requires accurate functionality checks of the various electronic and mechanical parts and, if necessary, the replacement of parts subject to wear and tear (batteries, fans and condensers). It is recommended to carry out periodic specialised maintenance (annually), in order to keep the equipment at the maximum level of efficiency and to avoid the installation being out of service with possible damage/risks. Moreover, attention should be paid to any requests for preventive maintenance that the equipment may automatically display with alarm/warning message.

6. 1. Batteries

The state of the battery is fundamental to UPS operation.
Thanks to the Expert Battery System, the information relating to the state and the conditions of use of the battery are processed in real time and the recharging and discharging procedures are selected automatically in order to optimise battery life expectancy and offer maximum performance.
Furthermore, during the operating life of the battery, Delphys BC stores statistics on the conditions of use of the battery for analysis.
Since the expected life of the batteries is very much dependent on operating conditions (number of charging and discharging cycles, load rate, temperature), a periodic check by authorised personnel is recommended.

When replacing the batteries, use the same type and configuration by placing them in the appropriate containers so as to avoid the risk of acid leakage.

The replaced batteries must be disposed of at authorised recycling and disposal centres.

Do not open the plastic cover of the batteries as they contain harmful substances.

6. 2. Fans

The life of the fans used to cool the power parts is dependent on the using and environmental conditions (temperature, dust).
Preventive replacement by an authorised technician is recommended within 4 years (in normal operating conditions).

When needed, fans must be replaced as per specifications by SOCOMEC.

6. 3. Capacitors.

The equipment houses electrolytic capacitors (used in the rectifier and inverter section) and filtering capacitors (used in the output section), whose life is dependent on using and environmental conditions.
The average expected life of these components is shown below:

- Electrolytic capacitors: 5 years;
- Filtering capacitors: 5 years.

In any case the effective state of the components is verified during preventive maintenance.

7. MULTIPLE COMMUNICATION

The Delphys Green Power UPS can manage various serial, contact and Ethernet communication channels at the same time. The 2 communication slots available allow the use of signalling accessories and cards

Each communication channel is independent; simultaneous connections can thus be made to have various levels of remote signalling and monitoring (see the § “options" for a detailed evaluation of the functionality of the cards that can be installed in the slots)

The table below shows the possible connections between the UPS communication channels and the external devices.

Possible options

	SLOT 1	SLOT 2
ADC + Serial Link interface	•	•
NetVision	•	•
Modbus TCP	•	•
BACnet	•	•
External gateway for LIB		•
ADC Delphys	•	•
RS485 ModBus RTU Delphys	•	•

* It is possible to use one isolated serial PCB only.

for localisation, please see § “Identifying switching and connection organs“.

Profibus / Profinet gateway are connected to ADC + Serial Link card.

ENGLISH

8. OPTIONS

8. 1. ADC + Serial Link interface

The ADC+SL (Advanced Dry Contact + Serial Link) is a slot optional board that provides:

- 4 relays for external device activation (can be set as normally closed or normally open)
- 3 free inputs to report external contacts to UPS
- 1 connector for external temperature sensor (optional)
- RS485 insulated serial link providing MODBUS RTU protocol2 leds indicating the board status

The board is plug&play: the UPS is able to recognize its presence and configuration (up to 4 standard operating modes can be selected using the two jumpers XJ2 and XJ3, refer to the UPS manual for more details) and manages the ADC outputs and the inputs accordingly. It's possible to create a custom operation mode through

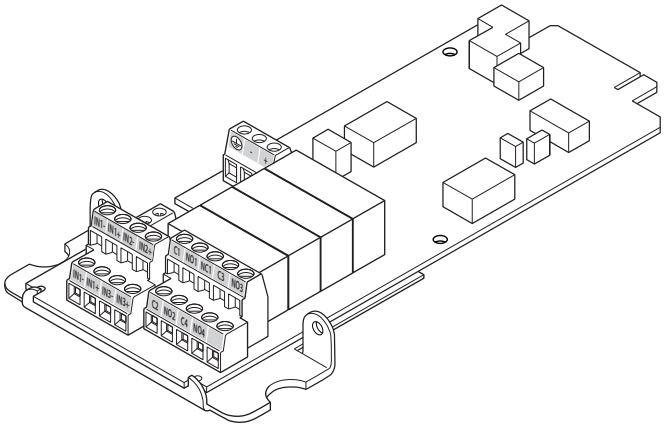

XpertSoft tool.
for more details, please see the Quick Start Guide of this card

8. 2. ADC Delphys interface

This card can be configured to control up to four outputs that are normally closed or normally open and up to three digital inputs A maximum of two cards can be installed on each unit.
Inputs and relays can be programmed by our Expert Service on purpose.
For default programing, if set, please refer to UPS operating manual according your UPS type.
for more details, please see the Installation manual of this card

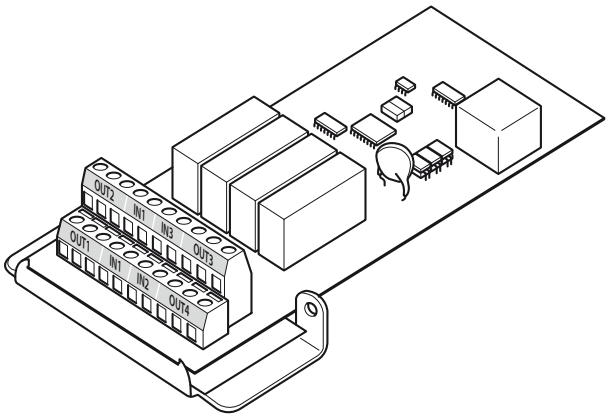

8. 3. Isolation controller

This device continually checks the transformer isolation, displaying an alarm message on the mimic panel

8. 4. External maintenance bypass

This device will electrically exclude and isolate Delphys Green Power UPS (e.g. for maintenance operations) without interrupting the power supplied to the load

8. 5. Net Vision card

NET VISION is a communication and management interface designed for business networks. The UPS behaves exactly like a networked peripheral, it can be managed remotely, and allows the shutdown of network workstations.
NET VISION allows a direct interface between the UPS and LAN network avoiding dependence on the server and support SMTP, SNMP, DHCP and many other protocols. It interacts via the web browser.

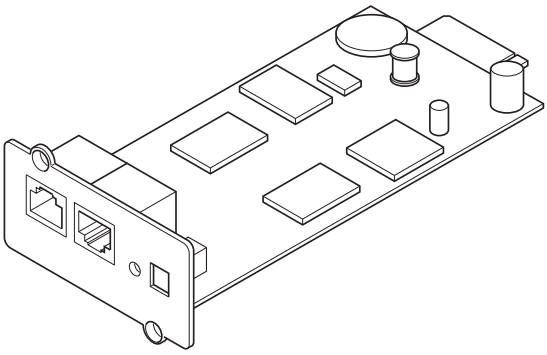

8. 5.1. EMD

EMD (Environmental Monitoring Device) is a device to be used in conjunction with the NET VISION interface and provides the following features:
temperature and humidity measurements + dry contact inputs,
alarm thresholds configurable via Web browser,
notification of environmental alarm via email and SNMP traps.

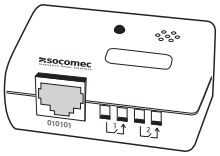

8. 6. ACS card

ACS (Automatic Cross Synchronisation) card is used to receive a synchronisation signal from an external source and manage it for the UPS where it is installed, and provide a synchronising signal, where requested, to another UPS.

8. 7. Modbus TCP card

With the MODBUS TCP card fitted in the options slot, the UPS can be monitored from remote stations using the appropriate protocol (MODBUS TCP - IDA).

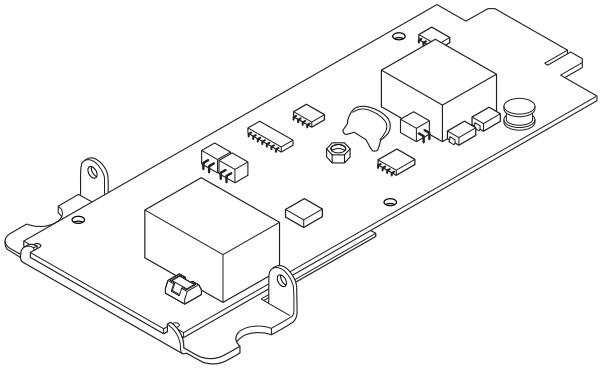

8. 8. BACnet card

With the BACnet card fitted in the options slot, the UPS can be monitored from remote stations using the appropriate protocol (BACnet - IDA).

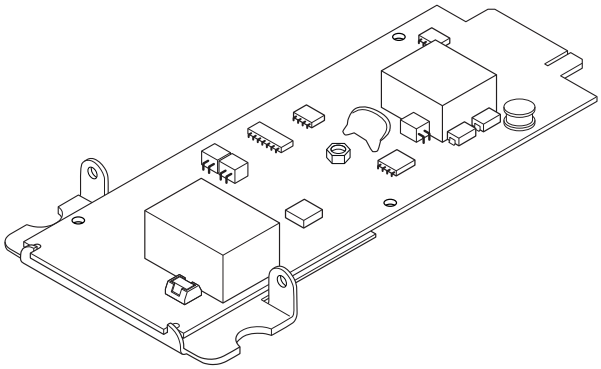

9. TECHNICAL SPECIFICATIONS

DELPHYS BC	160	200
Electrical specifications - Rectifier Input		
Mains voltage with nominal power (cos φ = 0,9)	3P 380/400/415 VAC	
Input frequency	42 - 65 Hz	
Input power factor	0,99	
THDI	≤ 3%	
Electrical specifications - Bypass Input		
Mains voltage with nominal power (cos φ = 0,9)	3P+N Un ± 10%	
Input frequency	50 / 60 Hz	
Electrical specifications - Output		
Output voltage	3P+N 400 V ±1%	
Frequency	50-60 Hz ±0,2%	
Automatic bypass	400 V ±15% (Selectable from 10% to 20% if generator is used)	
Nominal power	144 kW	180 kW
Overload (at t° ≤ 25°C, as per IEC 62040-3):		
• 10 minutes	180 kW	225 kW
• 1 minute	216 kW	270 kW
Crest factor	3:1	
Harmonic Voltage distortion	< 2% with linear load; < 4% with non-linear load	
Inverter short-circuit capacity	720A	
Bypass		
Manual maintenance bypass	Built-in	
Maximum overload capacity admitted	110% 60 min, 125% 10 min, 150% 1 min (≤ 25°C, 400V/50Hz)	
Bypass short-circuit capacity (peak 20ms)	8000 Â	
Rated short-time withstand current Icw (kA)	10 kA	
Environment		
Operating temperature	10÷35 °C (25 °C recommended)	
Storage temperature	-20÷70 °C	
Relative humidity (condensation-free)	up to 95%	
Max. altitude	1000 m	
Acoustic noise	< 68 dBA	
Air flow	2250 m³/h	
Dissipated power max at Pn	9200 W	11500 W
Nominal condition	31391 BTU/h	39239 BTU/h
Dissipated power max at Pn	10600 W	13300 W
/ worst conditions	36168 BTU/h	45380 BTU/h
Standards		
Safety (TÜV certified)	IEC 62040-1	
EMC	IEC 62040-2	
Product certification	CE (E2376)	
Protection level	IP20*	

These performances are given for information at rated load (resistive)

* IP 32 on request

socomec Innovative Power Solutions

10. APPENDIX

10. 1. Plan 1: Floor fixing

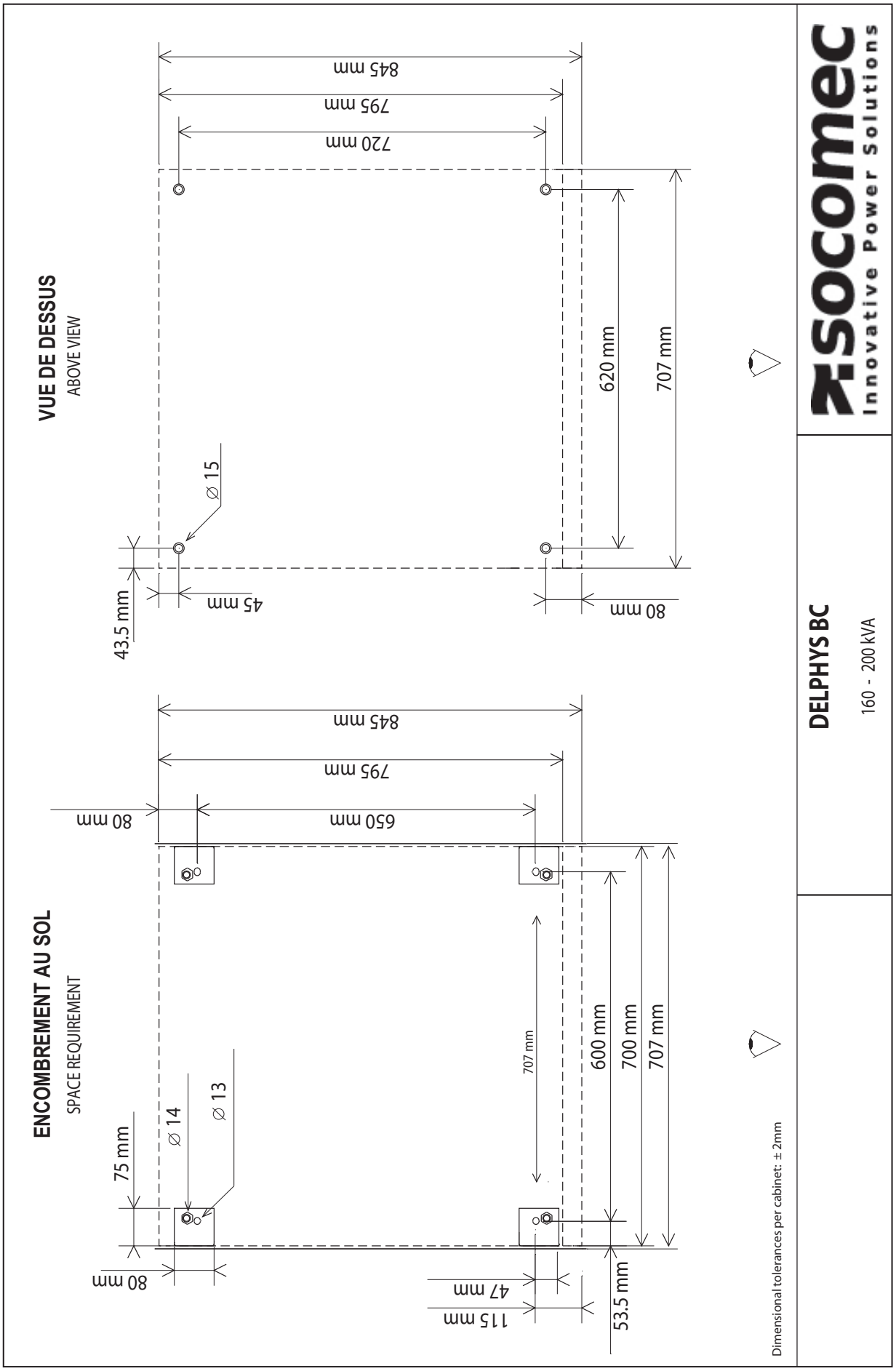

ENGLISH

10. 2. Plan 2: Dimensions

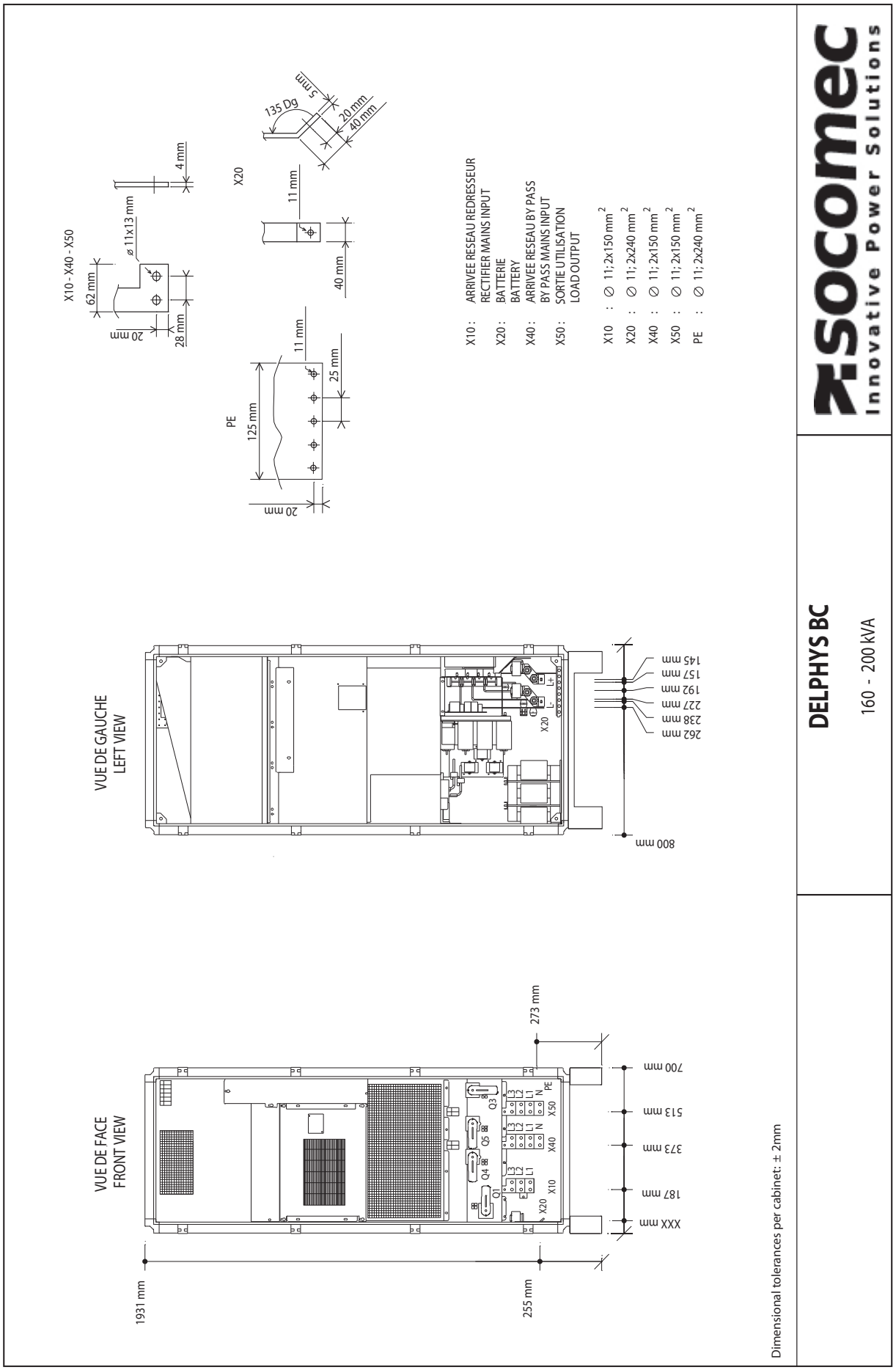

socomec
Innovative Power Solutions

10. 3. Plan 3: Battery Floor fixing

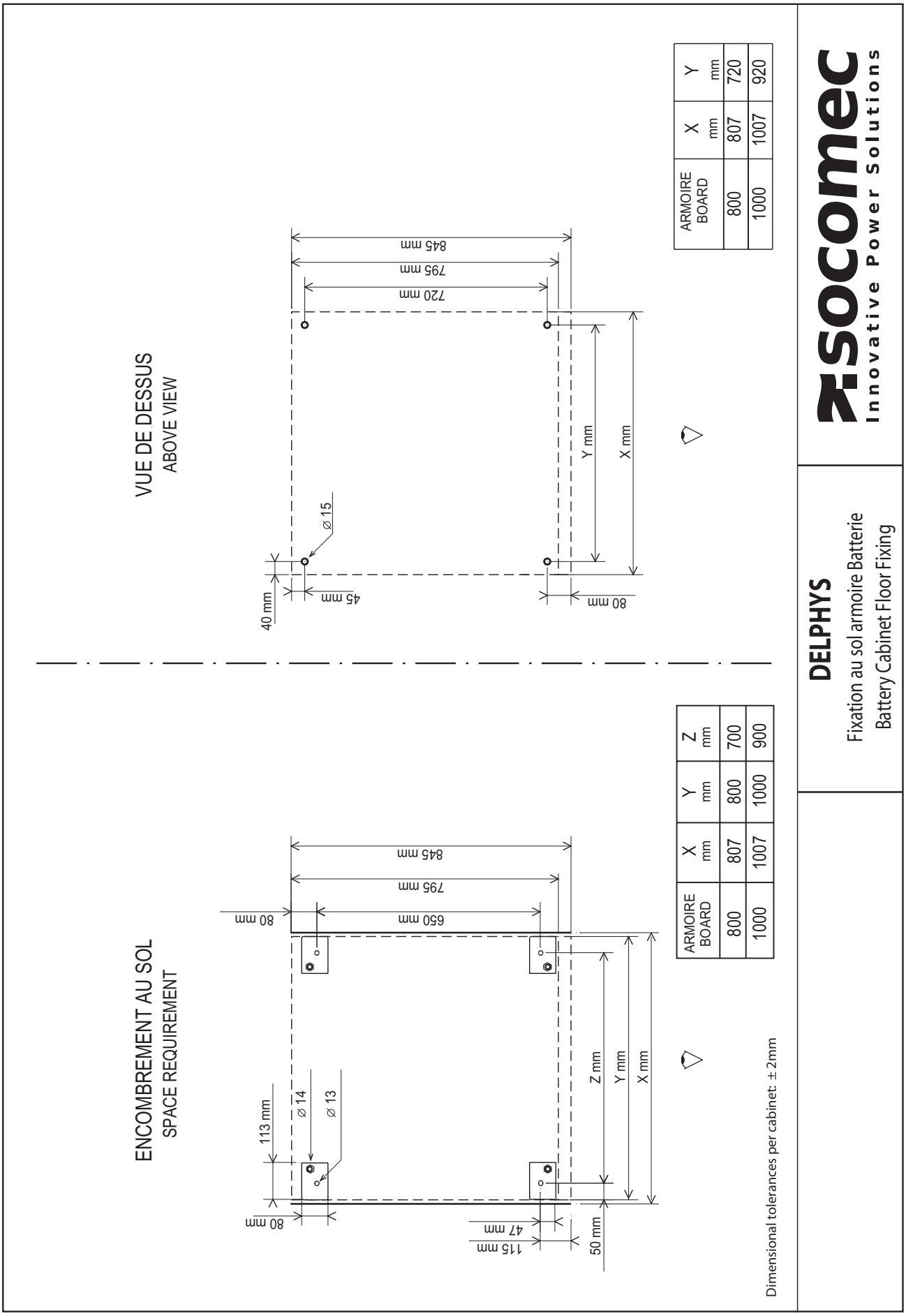

ARMOIRE BOARD	X mm	Y mm
800	807	720
1000	1007	920

ARMOIRE BOARD	X mm	Y mm	Z mm
800	807	800	700
1000	1007	1000	900

ENGLISH

Socomec: our innovations supporting your energy performance

1 independent manufacturer

3,600 employees worldwide

10 % of sales revenue dedicated to R&D

400 experts dedicated to service provision

Your power management expert

POWER SWITCHING

POWER MONITORING

POWER CONVERSION

ENERGY STORAGE

EXPERT SERVICES

The specialist for critical applications

- Control, command of LV facilities
- Safety of persons and assets

- Measurement of electrical parameters
- Energy management

- Energy quality
- Energy availability
- Energy storage

- Prevention and repairs
- Measurement and analysis
- Optimisation
- Consultancy, commissioning and training

A worldwide presence

12 production sites
- France (x3)
- Italy (x2)
- Tunisia
- India
- China (x2)
- USA (x3)

28 subsidiaries and commercial locations
- Algeria • Australia • Belgium • China • Canada
- Dubai (United Arab Emirates) • France • Germany
- India • Indonesia • Italy • Ivory Coast • Netherlands
- Poland • Portugal • Romania • Serbia • Singapore
- Slovenia • South Africa • Spain • Switzerland
- Thailand • Tunisia • Turkey • UK • USA

80 countries where our brand is distributed

UK CA

Socomec U.K. Limited, Unit 7-9 Lakeside Business Park, Broadway Lane, South Cerney, Cirencester, Glos. GL7 5XL.
www.socomec.co.uk

CORPORATE HQ CONTACT: SOCOMEC SAS, 1-4 RUE DE WESTHOUSE, 67235 BENFELD, France.

HEAD OFFICE

SOCOMEC GROUP
SAS SOCOMEC capital 10 607 040 €
R.C.S. Strasbourg B 548 500 149
B.P. 60010 - 1, rue de Westhouse
F-67235 Benfeld Cedex
Tel. +33 3 88 57 41 41 - Fax +33 3 88 57 78 78
info.scp.isd@socomec.com

YOUR DISTRIBUTOR / PARTNER

www.socomec.com

100 years OF SHARED ENERGY 1922 — 2022

socomec Innovative Power Solutions

Non contractual document. © 2022, Socomec SAS. All rights reserved. - Document printed on paper from sustainably managed forests.