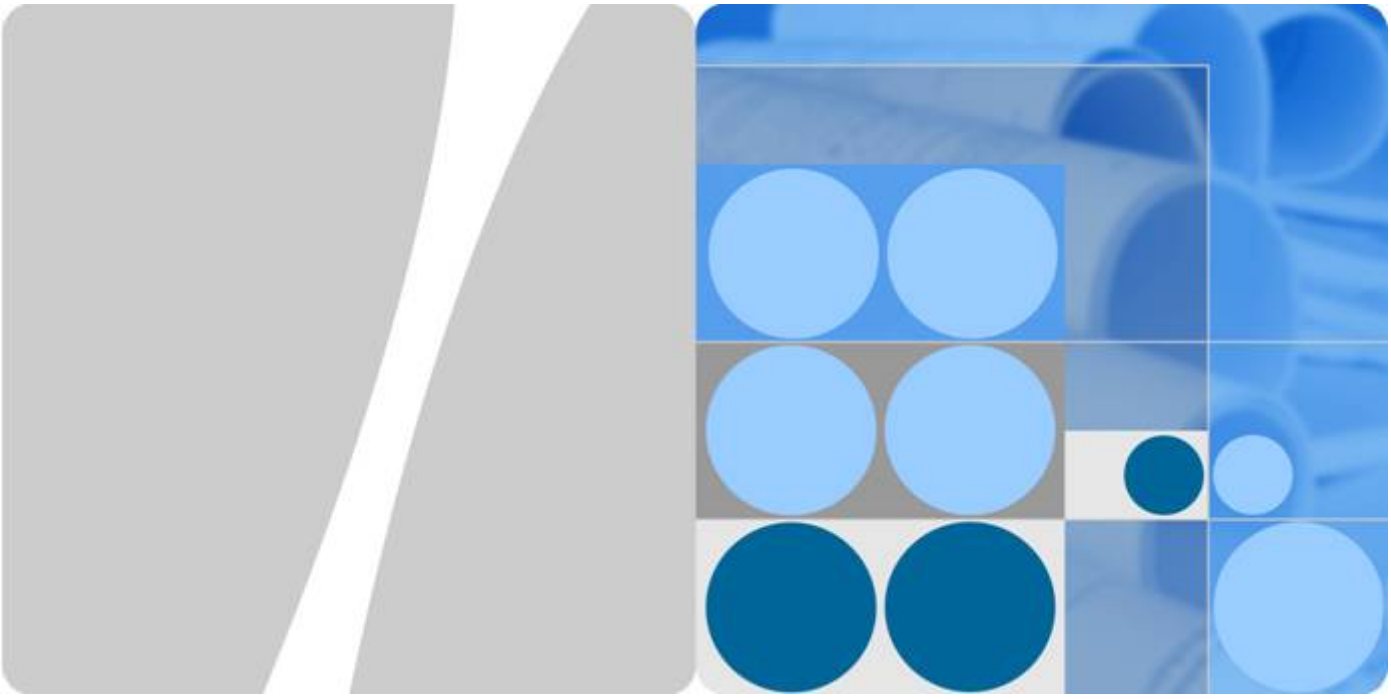

UPS5000-E-(30 kVA-120 kVA)-FM

User Manual

Issue 02

Date 2020-11-10

HUAWEI TECHNOLOGIES CO., LTD.

Copyright © Huawei Technologies Co., Ltd. 2020. All rights reserved.

No part of this document may be reproduced or transmitted in any form or by any means without prior written consent of Huawei Technologies Co., Ltd.

Trademarks and Permissions

HUAWEI and other Huawei trademarks are trademarks of Huawei Technologies Co., Ltd.
All other trademarks and trade names mentioned in this document are the property of their respective holders.

Notice

The purchased products, services and features are stipulated by the contract made between Huawei and the customer. All or part of the products, services and features described in this document may not be within the purchase scope or the usage scope. Unless otherwise specified in the contract, all statements, information, and recommendations in this document are provided "AS IS" without warranties, guarantees or representations of any kind, either express or implied.

The information in this document is subject to change without notice. Every effort has been made in the preparation of this document to ensure accuracy of the contents, but all statements, information, and recommendations in this document do not constitute a warranty of any kind, express or implied.

Huawei Technologies Co., Ltd.

Address: Huawei Industrial Base
Bantian, Longgang
Shenzhen 518129
People's Republic of China

Website: https://e.huawei.com

About This Document

Purpose

This document describes the UPS5000-E-120K-FM in terms of its features, performance specifications, working principles, appearance, structure, installation, and operation and maintenance (O&M). In this document, UPS5000-E-120K-FM is abbreviated to UPS, which is short for uninterruptible power system.

Intended Audience

This document is intended for:

- Sales engineers
- Technical support engineers
- System engineers
- Hardware installation engineers
- Commissioning engineers
- Data configuration engineers
- Maintenance engineers

Symbol Conventions

The symbols that may be found in this document are defined as follows.

Symbol	Description
DANGER	Indicates a hazard with a high level of risk which, if not avoided, will result in death or serious injury.
WARNING	Indicates a hazard with a medium level of risk which, if not avoided, could result in death or serious injury.
CAUTION	Indicates a hazard with a low level of risk which, if not avoided, could result in minor or moderate injury.

Copyright © Huawei Technologies Co., Ltd.

Symbol	Description
NOTICE	Indicates a potentially hazardous situation which, if not avoided, could result in equipment damage, data loss, performance deterioration, or unanticipated results. NOTICE is used to address practices not related to personal injury.
NOTE	Supplements the important information in the main text. NOTE is used to address information not related to personal injury, equipment damage, and environment deterioration.

Change History

Updates between document issues are cumulative. Therefore, the latest document issue contains all updates made in previous versions.

Issue 02 (2020-11-10)

Adapted the UPS to SmartLi and updated the monitoring user interfaces.

Issue 01 (2020-04-27)

This issue is the first official release.

 Copyright © Huawei Technologies Co., Ltd.

Contents

About This Document ii

1 Safety Information 1

1.1 General Safety 1
1.2 Personnel Requirements 4
1.3 Electrical Safety 4
1.4 Installation Environment Requirements 6
1.5 Mechanical Safety 8
1.6 Device Running Safety 10
1.7 Battery Safety 12
1.8 Others 15

2 Overview 16

2.1 Model Description 16
2.2 Working Principle 17
2.2.1 Conceptual Diagram 17
2.2.2 Working Modes 17
2.2.2.1 Normal Mode 17
2.2.2.2 Bypass Mode 18
2.2.2.3 Battery Mode 19
2.2.2.4 Maintenance Bypass Mode 20
2.2.2.5 ECO Mode 21
2.3 Product Introduction 22
2.3.1 Structure 23
2.3.2 Power Module 24
2.3.3 Bypass Module 26
2.3.4 Power Distribution Module 28
2.3.5 Control Module 28
2.3.5.1 Overview 28
2.3.5.2 ECM 29
2.3.5.3 Dry contact card 31
2.3.5.4 Monitoring interface card 33
2.3.6 MDU 38
2.4 Typical configurations 40

2.4.1 Single UPS....40
2.4.2 Parallel System....40
2.4.3 Dual-Bus System....41
2.5 Optional Components....42
3 Installation....44
3.1 Installation Preparations....44
3.1.1 Site....44
3.1.1.1 Dimensions....44
3.1.1.2 Installation Environment....45
3.1.1.3 Installation Clearances....46
3.1.2 Tools and Instruments....46
3.1.3 Preparing Power Cables....48
3.1.4 Unpacking and Checking....51
3.2 Installing a Single UPS....55
3.2.1 Installing the Cabinet....55
3.2.2 Installing Batteries....60
3.2.3 Installing Optional Components....60
3.2.3.1 Installing Antiseismic Kits....60
3.2.3.2 Connecting an Ambient T/H Sensor....61
3.2.3.3 Connecting the iBAT....62
3.2.3.4 Installing a Battery Grounding Failure Detector....62
3.2.4 UPS Cable Connection Reference....63
3.2.5 Routing Cables....64
3.2.5.1 Routing Cables from the Top....64
3.2.5.2 Routing Cables from the Bottom....68
3.2.6 Remote EPO....76
3.2.7 Connecting Communications Cables....77
3.3 Installing a Parallel System....77
3.3.1 Installing the UPSs....78
3.3.2 Connecting Power Cables....79
3.3.3 Connecting Signal Cables....81
3.4 Installation Verification....83
4 User Interface....87
4.1 LCD Interface....87
4.1.1 Main Menu....87
4.1.2 System Info Screen....88
4.1.2.1 Module Data Screen....89
4.1.2.2 Running....89
4.1.2.3 Alarms Screen....93
4.1.2.4 Settings....94
4.1.2.5 Maintenance....118
4.1.2.6 About Screen....123

4.1.3 System Status ... 123
4.1.4 Common Functions ... 123
4.2 WebUI ... 124
4.2.1 Login ... 124
4.2.2 Monitoring ... 126
4.2.3 Query ... 135
4.2.4 System Settings ... 136
4.2.5 Maintenance ... 139

5 Operations ... 141

5.1 Powering On and Starting the UPS ... 141
5.1.1 Powering On the UPS ... 141
5.1.2 Initial Startup ... 141
5.1.2.1 Obtaining Startup Password ... 142
5.1.2.2 Settings Wizard ... 142
5.1.3 Starting the Inverter ... 144
5.1.4 Powering On Loads ... 146
5.1.5 (Optional) Setting Parameters for the BCB Box ... 146
5.2 Shutting Down and Powering Off the UPS ... 147
5.3 Cold-Starting the UPS Using Batteries ... 148
5.4 Transferring to Bypass Mode ... 149
5.5 Setting ECO Mode ... 149
5.6 Testing Batteries ... 151
5.6.1 Lead-Acid Battery Test ... 151
5.6.1.1 Forced Equalized Charging Test ... 151
5.6.1.2 Shallow Discharge Test ... 152
5.6.1.3 Capacity Test ... 153
5.6.2 Lithium Battery Test ... 154
5.6.2.1 Shallow Discharge Test ... 154
5.6.2.2 Capacity Test ... 155
5.6.3 Test Data Download ... 156
5.7 Transferring to Maintenance Bypass Mode ... 157
5.8 Transferring from Maintenance Bypass Mode to Normal Mode ... 159
5.9 Performing EPO ... 159
5.10 Clearing the EPO State ... 160
5.11 Exporting Data ... 160
5.12 Setting Hibernation Mode ... 161

6 Routine Maintenance ... 163

6.1 UPS Maintenance ... 163
6.1.1 Monthly Maintenance ... 164
6.1.2 Quarterly Maintenance ... 164
6.1.3 Annual Maintenance ... 165
6.2 Battery Maintenance ... 166

6.2.1 Precautions for Battery Maintenance 166
6.2.2 Monthly Maintenance 166
6.2.3 Quarterly Maintenance 168
6.2.4 Annual Maintenance 169

7 Troubleshooting 170

8 Technical Specifications 173

8.1 Physical Features 173
8.2 Internal Switch Parameters 173
8.3 Environmental Specifications 174
8.4 Safety Regulations and EMC 174
8.5 Mains Input Electrical Specifications 175
8.6 Bypass Input Electrical Specifications 175
8.7 Battery Electrical Specifications 176
8.8 Output Electrical Specifications 177
8.9 System Electrical Specifications 178

A (Optional) TN-C System Application 179

B Alarm List 180

C Acronyms and Abbreviations 193

1 Safety Information

1.1 General Safety

Statement

Before installing, operating, and maintaining the equipment, read this document and observe all the safety instructions on the equipment and in this document.

The "NOTICE", "CAUTION", "WARNING", and "DANGER" statements in this document do not cover all the safety instructions. They are only supplements to the safety instructions. Huawei will not be liable for any consequence caused by the violation of general safety requirements or design, production, and usage safety standards.

Ensure that the equipment is used in environments that meet its design specifications. Otherwise, the equipment may become faulty, and the resulting equipment malfunction, component damage, personal injuries, or property damage are not covered under the warranty.

Follow local laws and regulations when installing, operating, or maintaining the equipment. The safety instructions in this document are only supplements to local laws and regulations.

Huawei will not be liable for any consequences of the following circumstances:

- Operation beyond the conditions specified in this document
- Installation or use in environments which are not specified in relevant international or national standards
- Unauthorized modifications to the product or software code or removal of the product
- Failure to follow the operation instructions and safety precautions on the product and in this document
- Equipment damage due to force majeure, such as earthquakes, fire, and storms
- Damage caused during transportation by the customer
- Storage conditions that do not meet the requirements specified in this document

 Copyright © Huawei Technologies Co., Ltd.

General Requirements

- Do not install, use, or operate outdoor equipment and cables (including but not limited to moving equipment, operating equipment and cables, inserting connectors to or removing connectors from signal ports connected to outdoor facilities, working at heights, and performing outdoor installation) in harsh weather conditions such as lightning, rain, snow, and level 6 or stronger wind.
- Before installing, operating, or maintaining the equipment, remove any conductive objects such as watches or metal jewelry like bracelets, bangles, and rings to avoid electric shock.
- When installing, operating, or maintaining the equipment, wear personal protective equipment such as insulation gloves, goggles, and safety clothing, helmet, and shoes, as shown in the following figure.

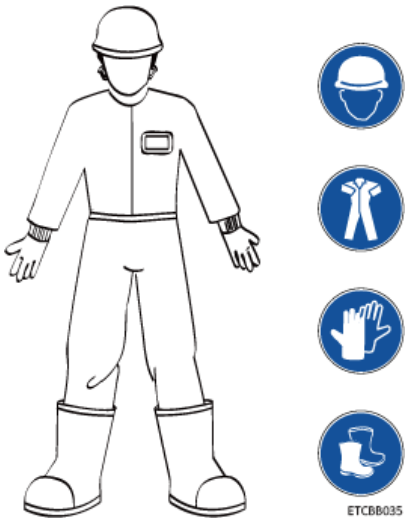

- Follow the specified procedures for installation, operation, and maintenance.
- Before handling a conductor surface or terminal, measure the contact point voltage and ensure that there is no risk of electric shock.
- After installing the equipment, remove idle packing materials such as cartons, foam, plastics, and cable ties from the equipment area.
- In the case of a fire, immediately leave the building or the equipment area, and turn on the fire alarm bell or make an emergency call. Do not enter the building on fire in any case.
- Do not stop using protective devices. Pay attention to the warnings, cautions, and related precautionary measures in this document and on the equipment. Promptly replace warning labels that have worn out.
- Keep irrelevant people away from the equipment. Only operators are allowed to access the equipment.
- Use insulated tools or tools with insulated handles, as shown in the following figure.

 Copyright © Huawei Technologies Co., Ltd.

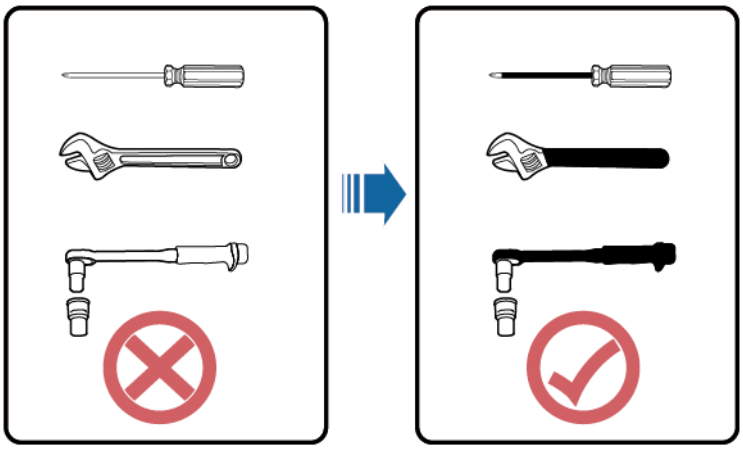

TN01H00005

- All cable holes should be sealed. Seal the used cable holes with firestop putty. Seal the unused cable holes with the caps delivered with the cabinet. The following figure shows the criteria for correct sealing with firestop putty.

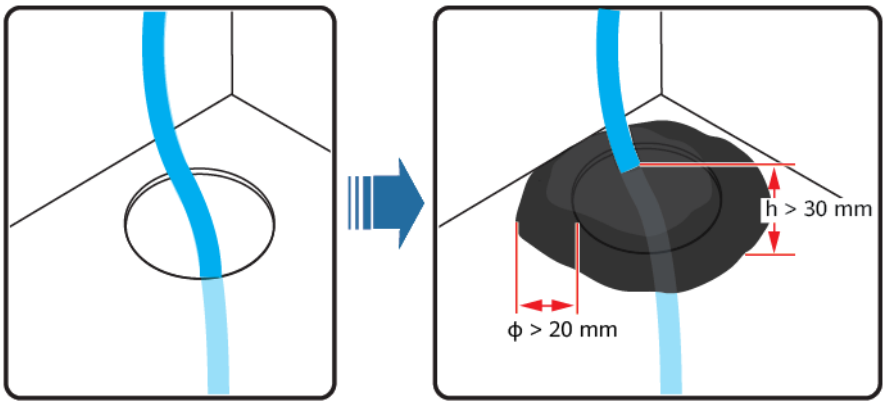

TN01H00006

- Do not scrawl, damage, or block any warning label on the equipment.
- When installing devices, use a torque wrench with a proper measurement range to tighten bolts. Ensure that the wrench is not skewed and the torque error does not exceed 10%.
- Do not work with power on during installation.
- Repaint any paint scratches caused during equipment transportation or installation in a timely manner. Equipment with scratches cannot be exposed to an outdoor environment for a long period of time.
- Before operations, ensure that the equipment is firmly secured to the floor or other solid objects, such as a wall or an installation rack.
- Do not use water to clean electrical components inside or outside of a cabinet.
- Do not change the structure or installation sequence of equipment without permission.
- Do not touch a running fan with your fingers, components, screws, tools, or boards before the fan is powered off or stops running.

 Copyright © Huawei Technologies Co., Ltd.

Personal Safety

- If there is a probability of personal injury or equipment damage during operations on the equipment, immediately stop the operations, report the case to the supervisor, and take feasible protective measures.
- To avoid electric shock, do not connect safety extra-low voltage (SELV) circuits to telecommunication network voltage (TNV) circuits.
- Do not power on the equipment before it is installed or confirmed by professionals.

1.2 Personnel Requirements

- Personnel who plan to install or maintain Huawei equipment must receive thorough training, understand all necessary safety precautions, and be able to correctly perform all operations.
- Only qualified professionals or trained personnel are allowed to install, operate, and maintain the equipment.
- Only qualified professionals are allowed to remove safety facilities and inspect the equipment.
- Personnel who will operate the equipment, including operators, trained personnel, and professionals, should possess the local national required qualifications in special operations such as high-voltage operations, working at heights, and operations of special equipment.
- Professionals: personnel who are trained or experienced in equipment operations and are clear of the sources and degree of various potential hazards in equipment installation, operation, maintenance
- Trained personnel: personnel who are technically trained, have required experience, are aware of possible hazards on themselves in certain operations, and are able to take protective measures to minimize the hazards on themselves and other people
- Operators: operation personnel who may come in contact with the equipment, except trained personnel and professionals
- Only professionals or authorized personnel are allowed to replace the equipment or components (including software).

1.3 Electrical Safety

Grounding

- For the equipment that needs to be grounded, install the ground cable first when installing the equipment and remove the ground cable last when removing the equipment.
- Do not damage the ground conductor.
- Do not operate the equipment in the absence of a properly installed ground conductor.
- Ensure that the equipment is connected permanently to the protective ground. Before operating the equipment, check its electrical connection to ensure that it is securely grounded.

 Copyright © Huawei Technologies Co., Ltd.

General Requirements

Use dedicated insulated tools when performing high-voltage operations.

AC and DC Power

DANGER

Do not connect or disconnect power cables with power on. Transient contact between the core of the power cable and the conductor will generate electric arcs or sparks, which may cause fire or personal injury.

- If a "high electricity leakage" tag is attached on the equipment, ground the protective ground terminal on the equipment enclosure before connecting the AC power supply; otherwise, electric shock as a result of electricity leakage may occur.
- Before installing or removing a power cable, turn off the power switch.
- Before connecting a power cable, check that the label on the power cable is correct.
- If the equipment has multiple inputs, disconnect all the inputs before operating the equipment.
- A circuit breaker equipped with a residual current device (RCD) is not recommended.
- A damaged power cable must be replaced by the manufacturer, service agent, or professionals to avoid risks.
- High voltage operations and installation of AC-powered facilities must be performed by qualified personnel.

Cabling

- When routing cables, ensure that a distance of at least 30 mm exists between the cables and heat-generating components or areas. This prevents damage to the insulation layer of the cables.
- Do not route cables behind the air intake and exhaust vents of the equipment.
- Ensure that cables meet the VW-1 or ZB flame spread rating requirements or higher.
- Bind cables of the same type together. When routing cables of different types, ensure that they are at least 30 mm away from each other.
- If an AC input power cable is connected to the cabinet from the top, bend the cable in a U shape outside the cabinet and then route it into the cabinet.
- When the temperature is low, violent impact or vibration may damage the plastic cable sheathing. To ensure safety, comply with the following requirements:
  - Cables can be laid or installed only when the temperature is higher than 0°C. Handle cables with caution, especially at a low temperature.
  - Cables stored at subzero temperatures must be stored at room temperature for at least 24 hours before they are laid out.

 Copyright © Huawei Technologies Co., Ltd.

- Do not perform any improper operations, for example, dropping cables directly from a vehicle.
- When selecting, connecting, and routing cables, follow local safety regulations and rules.

ESD

NOTICE

The static electricity generated by human bodies may damage the electrostatic-sensitive components on boards, for example, the large-scale integrated (LSI) circuits.

- Wear ESD gloves or a well-grounded ESD wrist strap when touching the device or handling boards or application-specific integrated circuits (ASICs).
- When holding a board, hold its edge without touching any components. Do not touch the components with your bare hands.
- Package boards with ESD packaging materials before storing or transporting them.

Figure 1-1 Wearing an ESD wrist strap

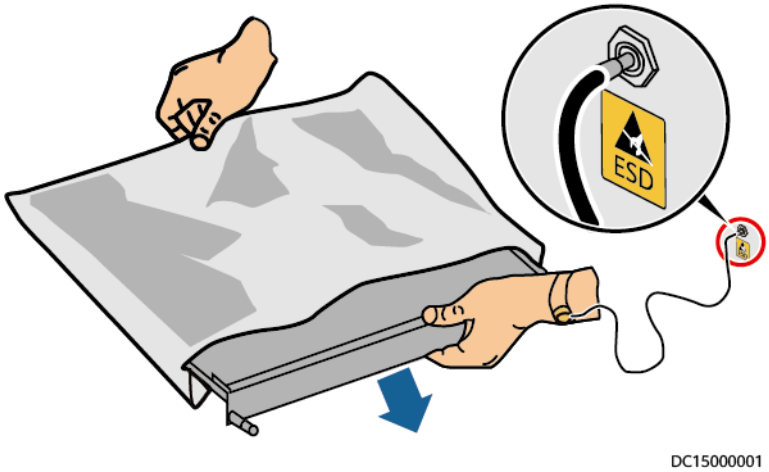

Neutral-Ground Voltage

It is recommended that the three-phase loads be equalized and the neutral-ground voltage be kept at less than 2 V to meet power distribution requirements.

1.4 Installation Environment Requirements

- To prevent fire due to high temperature, ensure that the ventilation vents or heat dissipation system are not blocked when the equipment is running.
- Install the equipment in an area far away from liquids. Do not install it under areas prone to condensation, such as under water pipes and air exhaust vents, or areas prone to water leakage, such as air conditioner vents, ventilation

vents, or feeder windows of the equipment room. Ensure that no liquid enters the equipment to prevent faults or short circuits.

- If any liquid is detected inside the equipment, immediately disconnect the power supply and contact the administrator.
- Do not expose the equipment to flammable or explosive gas or smoke. Do not perform any operation on the equipment in such environments.
- Ensure that the equipment room provides good heat insulation, and the walls and floor are dampproof.
- Install a rat guard at the door of the equipment room.

Installation at Heights

- Working at heights refers to operations that are performed at least 2 meters above the ground.
- Do not work at heights if the steel pipes are wet or other potential danger exists. After the preceding conditions no longer exist, the safety director and relevant technical personnel need to check the involved equipment. Operators can begin working only after obtaining consent.
- When working at heights, comply with local relevant laws and regulations.
- Only trained and qualified personnel are allowed to work at heights.
- Before working at heights, check the climbing tools and safety gears such as safety helmets, safety belts, ladders, springboards, scaffolding, and lifting equipment. If they do not meet the requirements, take corrective measures or disallow working at heights.
- Wear personal protective equipment such as the safety helmet and safety belt or waist rope and fasten it to a solid structure. Do not mount it on an insecure moveable object or metal object with sharp edges. Make sure that the hooks will not slide off.
- Set a restricted area and eye-catching signs for working at heights to warn away irrelevant personnel.
- Carry the operation machinery and tools properly to prevent them from falling off and causing injuries.
- Personnel involving working at heights are not allowed to throw objects from the height to the ground, or vice versa. Objects should be transported by tough slings, hanging baskets, highline trolleys, or cranes.
- Ensure that guard rails and warning signs are set at the edges and openings of the area involving working at heights to prevent falls.
- Do not pile up scaffolding, springboards, or other sundries on the ground under the area involving working at heights. Do not allow people to stay or pass under the area involving working at heights.
- Inspect the scaffolding, springboards, and workbenches used for working at heights in advance to ensure that their structures are solid and not overloaded.
- Any violations must be promptly pointed out by the site manager or safety supervisor and the involved personnel should be prompted for correction. Personnel who fail to stop violations will be forbidden from working.

 Copyright © Huawei Technologies Co., Ltd.

1.5 Mechanical Safety

Hoisting Devices

- Do not walk under hoisted objects.
- Only trained and qualified personnel should perform hoisting operations.
- Check that hoisting tools are available and in good condition.
- Before hoisting objects, ensure that hoisting tools are firmly secured onto a load-bearing object or wall.
- Ensure that the angle formed by two hoisting cables is no more than 90 degrees, as shown in the following figure.

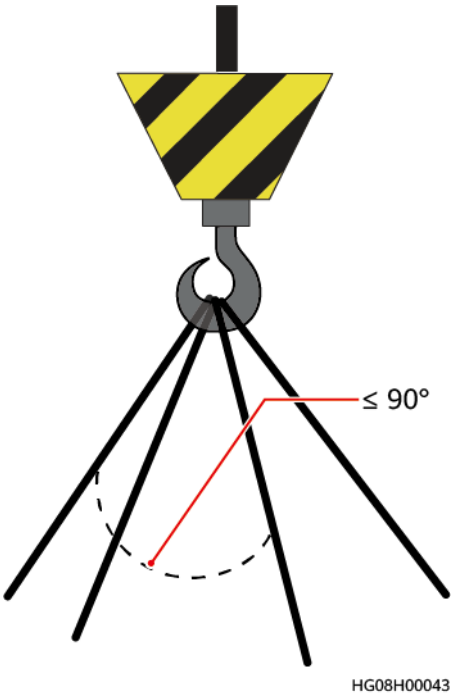

- Do not drag steel ropes and hoisting tools or bump hoisted objects against hard objects during hoisting.

Using Ladders

- Use wooden or fiberglass ladders when you need to perform live working at heights.
- When a step ladder is used, ensure that the pull ropes are secured and the ladder is held firm.
- Before using a ladder, check that it is intact and confirm its load bearing capacity. Do not overload it.
- Ensure that the ladder is securely positioned. The recommended angle for a ladder against the floor is 75 degrees, as shown in the following figure. An angle rule can be used to measure the angle. Ensure that the wider end of the ladder is at the bottom, or protective measures have been taken at the bottom to prevent the ladder from sliding.

 Copyright © Huawei Technologies Co., Ltd.

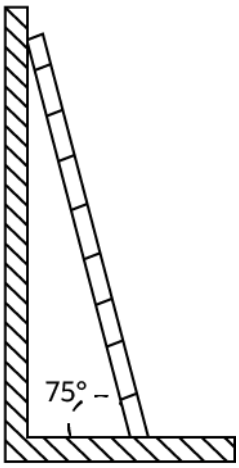

- When climbing a ladder, take the following precautions to reduce risks and ensure safety:
  - Keep your body steady.
  - Do not climb higher than the fourth rung of the ladder from the top.
  - Ensure that your body's center of gravity does not shift outside the legs of the ladder.

Drilling Holes

When drilling holes into a wall or floor, observe the following safety precautions:

NOTICE

Do not drill holes into the equipment. Doing so may affect the electromagnetic shielding of the equipment and damage components or cables inside. Metal shavings from drilling may short-circuit boards inside the equipment.

- Obtain the consent from the customer and subcontractor before drilling.
- Wear goggles and protective gloves when drilling holes.
- When drilling holes, protect the equipment from shavings. After drilling, clean up any shavings that have accumulated inside or outside the equipment.

Moving Heavy Objects

DANGER

When removing a heavy or unstable component from a cabinet, be aware of unstable or heavy objects on the cabinet.

- Be cautious to avoid injury when moving heavy objects.

 Copyright © Huawei Technologies Co., Ltd.

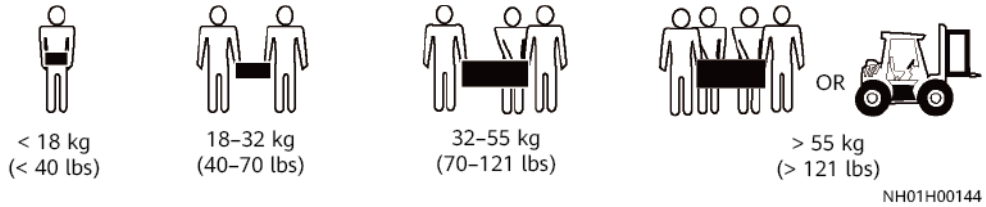

- When moving the equipment by hand, wear protective gloves to prevent injuries.
- Move or lift the equipment by holding its handles or lower edges. Do not hold the handles of modules (such as power supply units, fans, and boards) that are installed in the equipment because they cannot support the weight of the equipment.
- Avoid scratching the cabinet surface or damaging cabinet components and cables during equipment transportation.
- When transporting the equipment using a forklift truck, ensure that the forks are properly positioned to ensure that the equipment does not topple. Before moving the equipment, secure it to the forklift truck using ropes. When moving the equipment, assign dedicated personnel to take care of it.
- Choose railways, sea, or a road with good condition for transportation to ensure equipment safety. Avoid tilt or jolt during transportation.
- Move a cabinet with caution. Any bumping or falling may damage the equipment.

1.6 Device Running Safety

The UPS is used for commercial and industrial purposes only. It cannot be used as a power supply for life support devices.

For power supply systems that are critical to significant economic interests or public order, such as the national computing center, military command system, emergency command center, railway signal system and control center, civil aviation and air traffic control center, airport command center, financial clearing center, and transaction center, the Tier 4 or 3 power architecture specified in TIA-942 must be used. That is, two power supplies must be used to supply power to loads.

Ensure that the equipment is used in an environment that meets the product design specifications (including power grid, temperature, and humidity). Otherwise, the equipment may become faulty, and the resulting equipment malfunction and component damage are not covered under the warranty.

The UPS operating environment must meet the requirements for the climate indicator, mechanically active substance indicator, and chemically active substance indicator in ETSI EN 300 019-1 class 3.6.

 Copyright © Huawei Technologies Co., Ltd.

NOTICE

- This is a category C3 UPS product for commercial and industrial application in the second environment – installation restrictions or additional measures may be needed to prevent disturbances.
- After unpacking the UPS, you are advised to power on the UPS as soon as possible. If you temporarily do not use the UPS, take appropriate measures to prevent moisture, dust, and foreign matter from entering the UPS.
- After unpacking batteries, you are advised to connect the battery supply as soon as possible. If you temporarily do not use the batteries, store them in a dry and clean environment. If batteries are stored for more than 90 days, charge them in time. Otherwise, the battery lifespan may be affected.
- Install the UPS in an area far away from liquids. Do not install it under areas prone to water leakage, such as air conditioner vents, ventilation vents, or feeder windows of the equipment room. Ensure that no liquid enters the UPS to prevent short circuits. Ensure that there is no condensation inside the equipment or equipment room.
- If any liquid is detected inside the equipment, immediately disconnect the power supply and contact the administrator.

DANGER

- Do not expose the equipment to flammable or explosive gas or smoke. Do not perform any operation on the equipment in such environments.
- During installation and maintenance, ensure that sundries do not enter the UPS. Otherwise, equipment damage, load power derating, power failure, and personal injury may occur.

If the valid mains voltage exceeds 320 V AC, the UPS may be damaged.

A UPS can be used to serve resistive-capacitive loads, resistive loads, and micro-inductive loads. It is recommended that a UPS not be used for pure capacitive loads, pure inductive loads, and half-wave rectification loads. A UPS does not apply to regeneration loads.

Any operation on any electrical device in an environment that has inflammable air can cause extreme danger. Strictly obey the operating environmental requirements specified in related user manuals when using or storing the device.

The UPS can be configured with a backfeed protection dry contact to work with an external automatic circuit breaker, preventing the voltage from flowing back to input terminals over static bypass circuits. If the installation and maintenance personnel do not need backfeed protection, paste labels on external mains and bypass input switches, informing that the UPS is connected to a backfeed protection card. Disconnect the backfeed protection card from the UPS before operating the UPS.

Do not use the UPS in the following places:

 Copyright © Huawei Technologies Co., Ltd.

- Environments that are close to flammable or explosive materials, dust, corrosive gases or dust, conductive or magnetic dust, abnormal vibration, or collision
- Rooms or outdoor environments where temperature and humidity are not controlled (with high temperature, low temperature, moisture, direct sunlight, or heat sources)
- Non-confined environments near the ocean (0–3.7 km) and indoor or semi-indoor environments where the temperature and humidity are not controllable, such as simple equipment rooms, civil houses, garages, corridors, and direct ventilation cabinets near the sea; or houses with only roofs, railway station platforms, gymnasiums, and aquariums
- Environments that are conducive for the growth of microorganisms such as fungus or mildew
- Environments where rodents (such as mice) and insects exist

1.7 Battery Safety

Basic Requirements

Before operating batteries, carefully read the safety precautions for battery handling and master the correct battery connection methods.

DANGER

- Do not expose batteries at high temperatures or around heat-generating devices, such as sunlight, fire sources, transformers, and heaters. Excessive heat exposure may cause the batteries to explode.
- Do not burn batteries. Otherwise, the batteries may explode.
- To avoid leakage, overheating, fire, or explosions, do not disassemble, alter, or damage batteries, for example, insert sundries into batteries or immerse batteries in water or other liquids.

- Wear goggles, rubber gloves, and protective clothing to prevent skin contact with electrolyte in the case of electrolyte overflow. If a battery leaks, protect the skin or eyes from the leaking liquid. If the skin or eyes come in contact with the leaking liquid, wash it immediately with clean water and go to the hospital for medical treatment.
- Use dedicated insulated tools.
- Move batteries in the required direction. Do not place a battery upside down or tilt it.
- Keep the battery loop disconnected during installation and maintenance.
- Use batteries of specified models. Using batteries of other models may damage the batteries.
- Dispose of waste batteries in accordance with local laws and regulations. Do not dispose of batteries as household waste. If a battery is disposed of improperly, it may explode.

 Copyright © Huawei Technologies Co., Ltd.

- The site must be equipped with qualified fire extinguishing facilities, such as firefighting sands and powder fire extinguishers.

NOTICE

To ensure battery safety and battery management accuracy, use batteries provided with the UPS by Huawei. Huawei is not responsible for any battery faults caused by batteries not provided by Huawei.

Battery Installation

Before installing batteries, observe the following safety precautions:

- Install batteries in a well-ventilated, dry, and cool environment that is far away from heat sources, flammable materials, moistures, extensive infrared radiation, organic solvents, and corrosive gases. Take fire prevention measures.
- Place and secure batteries horizontally.
- Note the polarities when installing batteries. Do not short-circuit the positive and negative poles of the same battery or battery string. Otherwise, the battery may be short-circuited.
- Check battery connections periodically, ensuring that all bolts are securely tightened.
- When installing batteries, do not place installation tools on the batteries.

Battery Short Circuit

DANGER

Battery short circuits can generate high instantaneous current and release a great amount of energy, which may cause equipment damage or personal injury.

To avoid battery short-circuit, do not maintain batteries with power on.

Flammable Gas

NOTICE

- Do not use unsealed lead-acid batteries.
- To prevent fire or corrosion, ensure that flammable gas (such as hydrogen) is properly exhausted for lead-acid batteries.

Lead-acid batteries emit flammable gas when used. Ensure that batteries are kept in a well-ventilated area and take preventive measures against fire.

 Copyright © Huawei Technologies Co., Ltd.

Battery Leakage

NOTICE

Battery overheating causes deformation, damage, and electrolyte spillage.

WARNING

When the electrolyte overflows, absorb and neutralize the electrolyte immediately. When moving or handling a battery whose electrolyte leaks, note that the leaking electrolyte may hurt human bodies.

- If the battery temperature exceeds 60°C, check for and promptly handle any leakage.
- Electrolyte overflow may damage the equipment. It will corrode metal parts and boards, and ultimately damage the boards.
- If the electrolyte overflows, follow the instructions of the battery manufacturer or neutralize the electrolyte by using sodium bicarbonate ($NaHCO_3$) or sodium carbonate (Na_2CO_3).

Lithium Battery

The safety precautions for lithium batteries are similar to those for lead-acid batteries except that you also need to note the precautions described in this section.

WARNING

There is a risk of explosion if a battery is replaced with an incorrect model.

- A battery can be replaced only with a battery of the same or similar model recommended by the manufacturer.
- When handling a lithium battery, do not place it upside down, tilt it, or bump it with other objects.
- Keep the lithium battery loop disconnected during installation and maintenance.
- Do not charge a battery when the ambient temperature is below the lower limit of the operating temperature (charging is forbidden at 0°C). Low-temperature charging may cause crystallization, which will result in a short circuit inside the battery.
- Use batteries within the allowed temperature range; otherwise, the battery performance and safety will be compromised.
- Do not throw a lithium battery in fire.
- When maintenance is complete, return the waste lithium battery to the maintenance office.

 Copyright © Huawei Technologies Co., Ltd.

1.8 Others

- Exercise caution when manually shutting down the UPS inverter for transferring to bypass mode, or when adjusting the UPS output voltage level or frequency. Doing so may affect the power supply to equipment.
- Exercise caution when setting battery parameters. Incorrect settings will affect the power supply and battery lifespan.

 Copyright © Huawei Technologies Co., Ltd.

2 Overview

2.1 Model Description

This document describes the following UPS model: UPS5000-E-120K-FM.

Figure 2-1 Model number

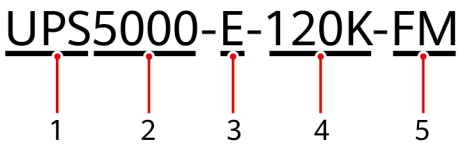

Table 2-1 Model number details

No.	Item	Description
1	Product category	UPS
2	Product family	5000
3	UPS subcategory	E series
4	Output capacity	120K: output capacity of 120 kVA (compatible with 90 kVA, 60 kVA, and 30 kVA)
5	Configuration type	F: in full configuration M: modular

 Copyright © Huawei Technologies Co., Ltd.

2.2 Working Principle

NOTE

- → indicates an input mode.
- ➡ indicates the energy flow direction.

2.2.1 Conceptual Diagram

The UPS5000 is an online product. It uses a modular design, which facilitates maintenance and capacity expansion. The UPS5000 adopts intelligent control. Its power module consists of a rectifier, inverter, and DC/DC converter. The UPS5000 converts inputs into pure high-quality sine wave outputs by using the high-frequency switching technology.

Figure 2-2 UPS conceptual diagram

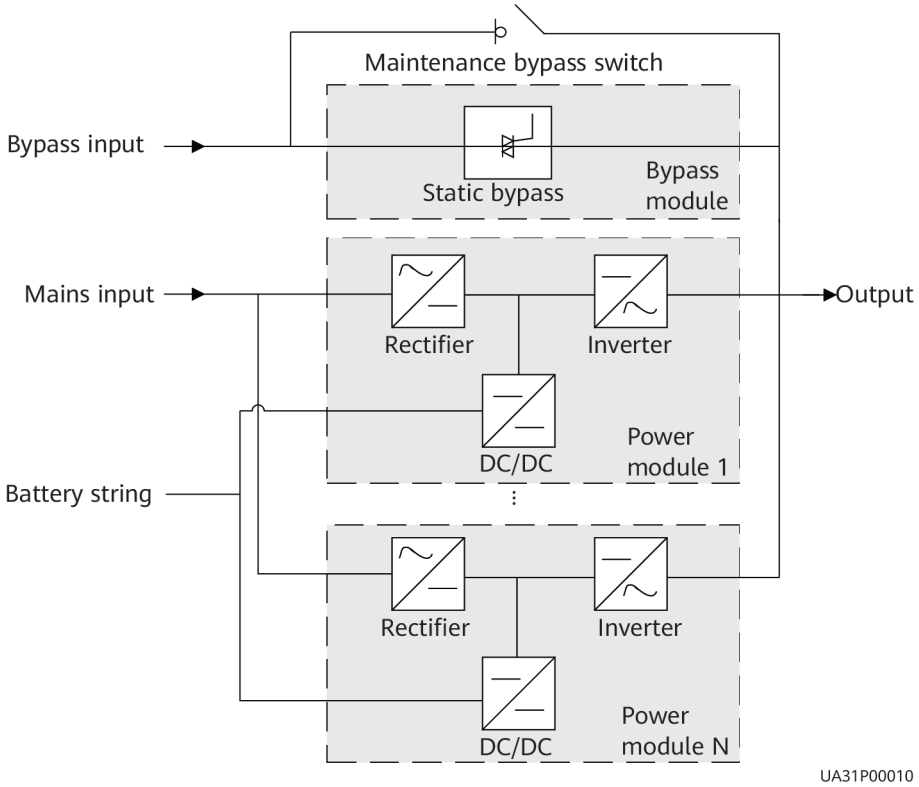

2.2.2 Working Modes

2.2.2.1 Normal Mode

In normal mode, the rectifier converts AC power into DC power, then the inverter converts DC power into high-precision AC outputs. The conversions protect loads from interference such as input harmonics, glitches, and voltage transients.

Figure 2-3 UPS conceptual diagram in normal mode

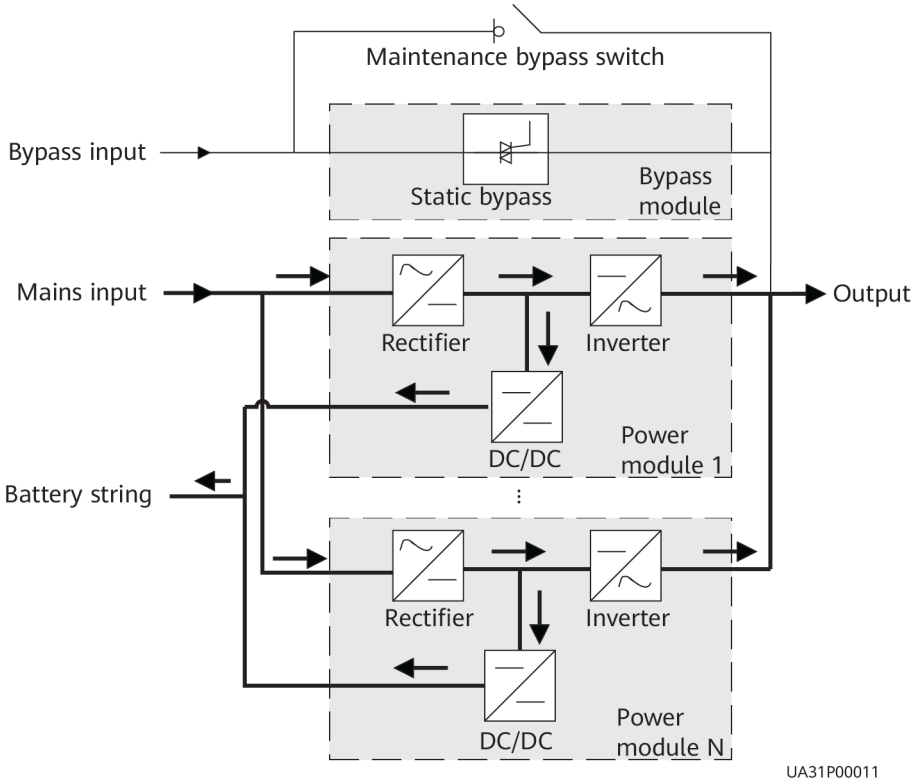

2.2.2.2 Bypass Mode

The UPS automatically transfers to bypass mode upon detecting power module overtemperature, overload, or other faults that may cause the inverter to shut down. The bypass power supply is not protected by the UPS which means it may be affected by mains outage, and incorrect AC voltage or frequency.

Figure 2-4 UPS conceptual diagram in bypass mode

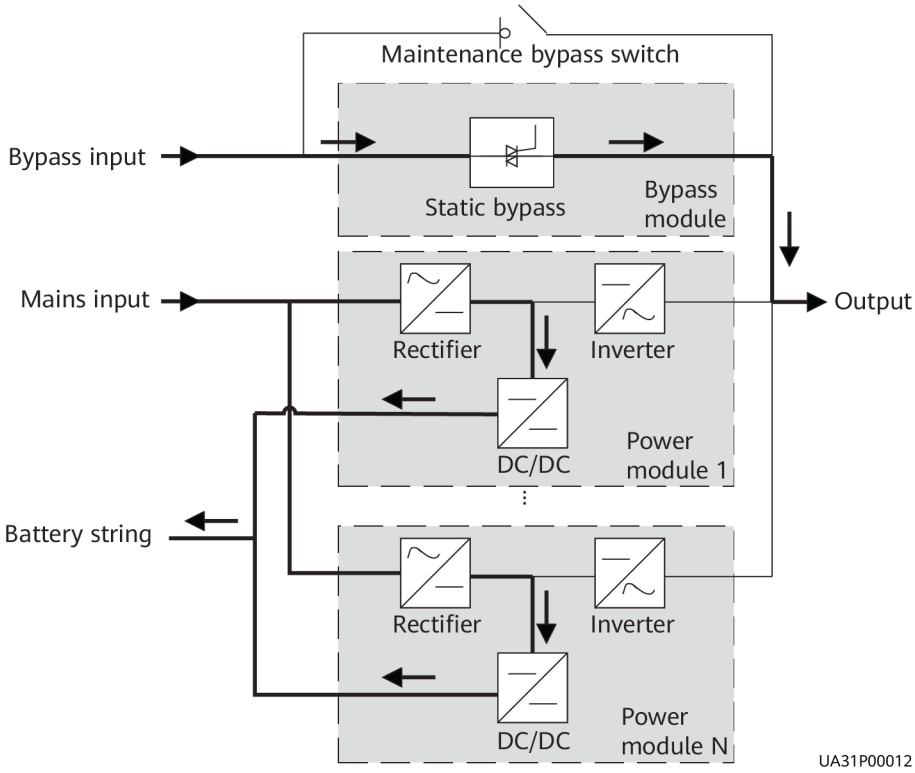

2.2.2.3 Battery Mode

If the mains input is abnormal or the rectifier becomes abnormal, the UPS transfers to battery mode. The power module obtains DC power from batteries, and the power is converted into AC output by the inverter.

Figure 2-5 UPS conceptual diagram in battery mode

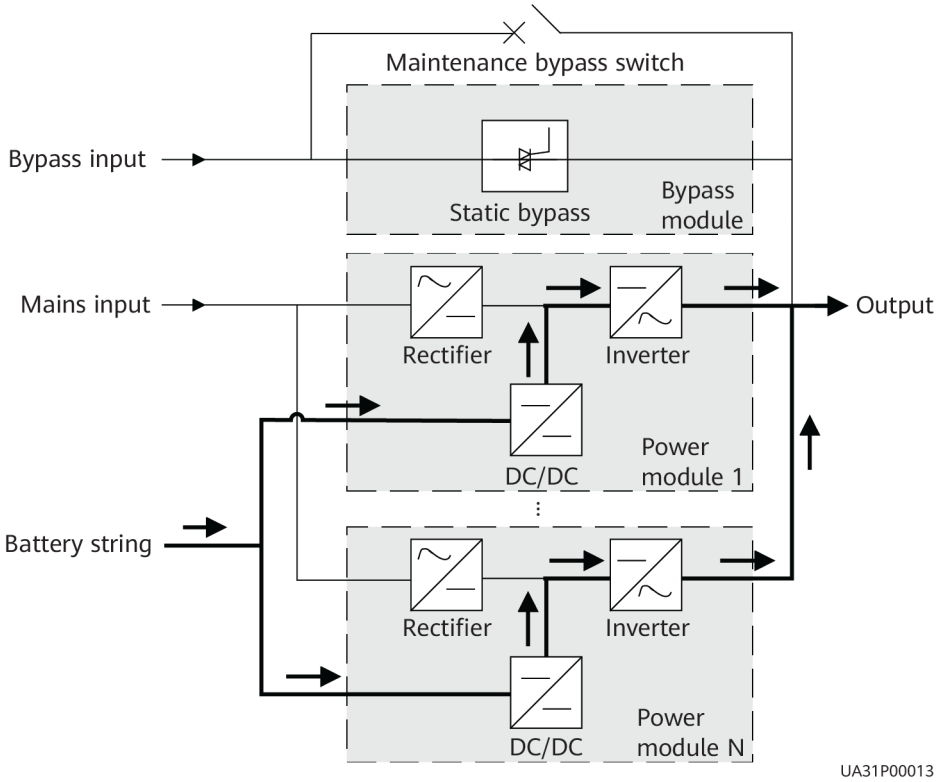

2.2.2.4 Maintenance Bypass Mode

When the UPS works in maintenance bypass mode, the current flows through the maintenance bypass instead of the power module. You can maintain the circuit inside the cabinet.

Figure 2-6 UPS conceptual diagram in maintenance bypass mode

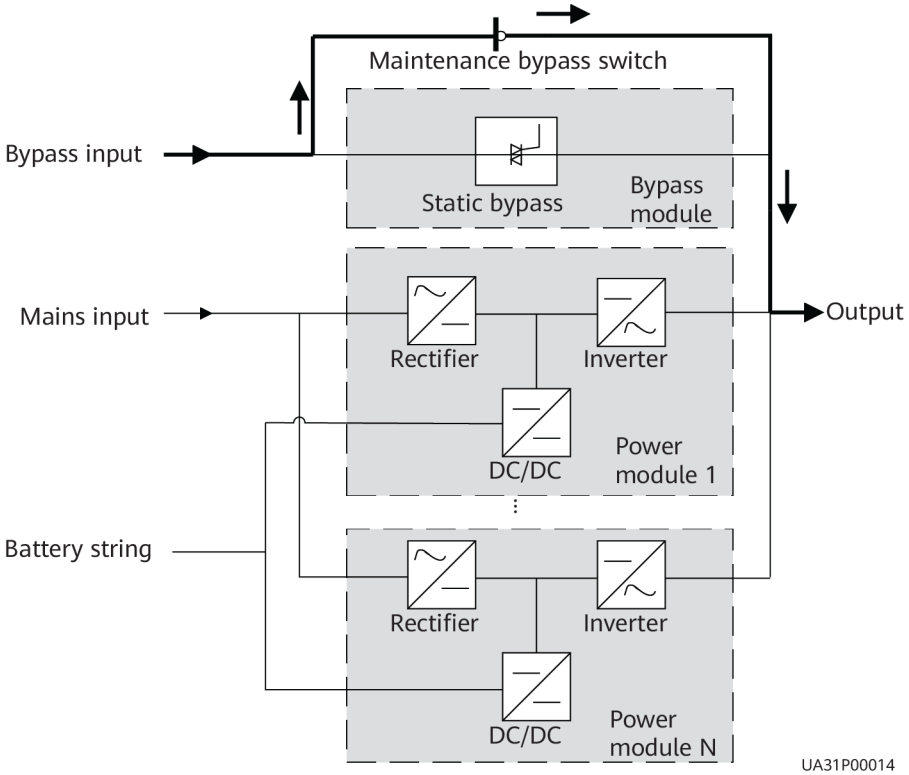

2.2.2.5 ECO Mode

The economic control operation (ECO) mode is an economical working mode, which can be configured on the LCD or web user interface (WebUI). In ECO mode, when the bypass input is within the ECO voltage and frequency ranges and other ECO power supply conditions are met, the UPS works in bypass mode and the inverter is in standby state. When the bypass voltage is outside the ECO voltage range, the UPS transfers from bypass mode to normal mode. In bypass mode or normal mode, the rectifier keeps working and charges batteries using a charger. The ECO mode delivers a high efficiency.

Figure 2-7 UPS conceptual diagram in ECO mode

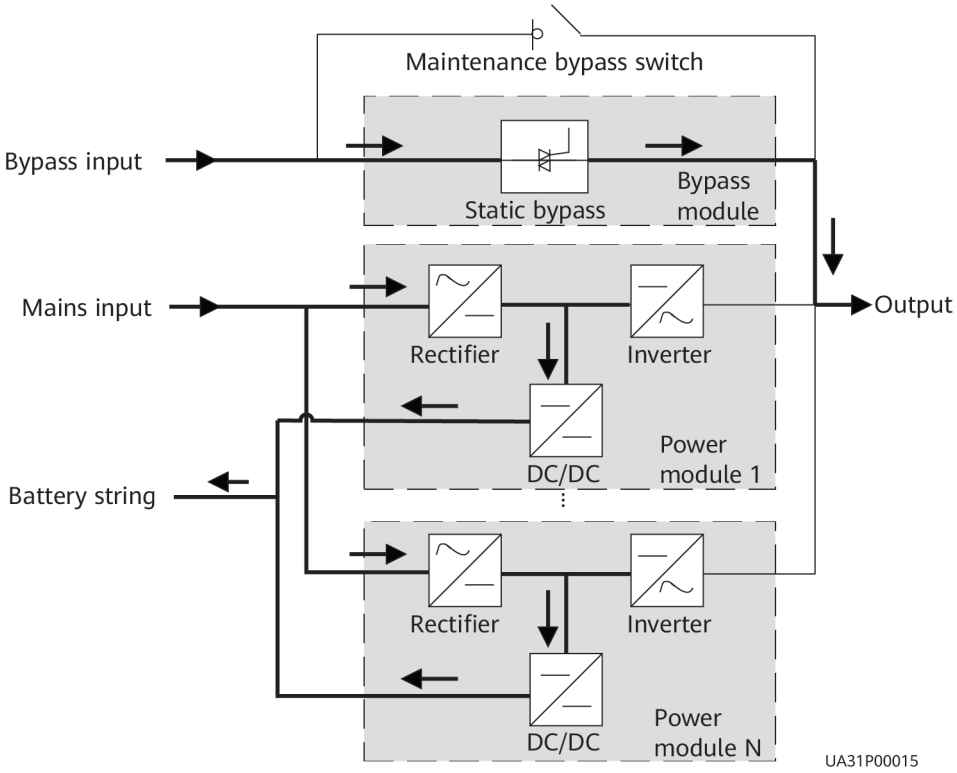

NOTE

Manual startup is required to ensure that the inverter is in standby state and the power flow has reached the inverter.

2.3 Product Introduction

2.3.1 Structure

Figure 2-8 Front view

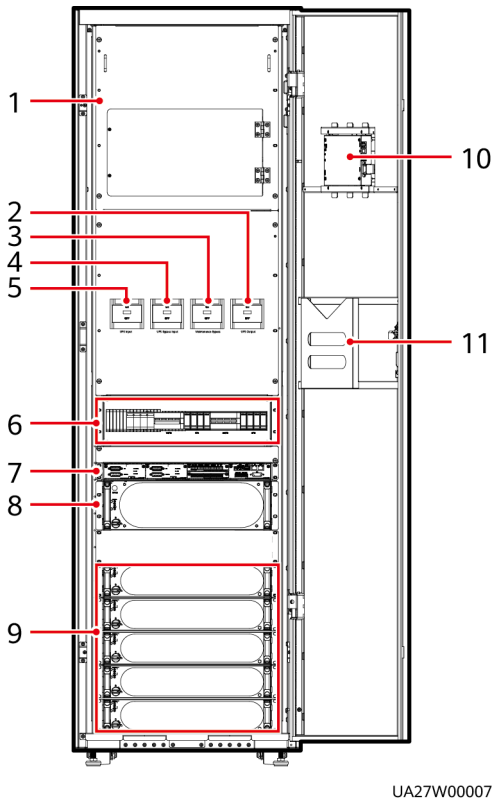

(1) Cover	(2) Output switch	(3) Maintenance bypass switch	(4) Bypass input switch
(5) Mains input switch	(6) Surge protective module (optional)	(7) Control module	(8) Bypass module
(9) Power modules	(10) Monitor display module (MDU)	(11) Folder	

 Copyright © Huawei Technologies Co., Ltd.

2.3.2 Power Module

Appearance

Figure 2-9 Power module

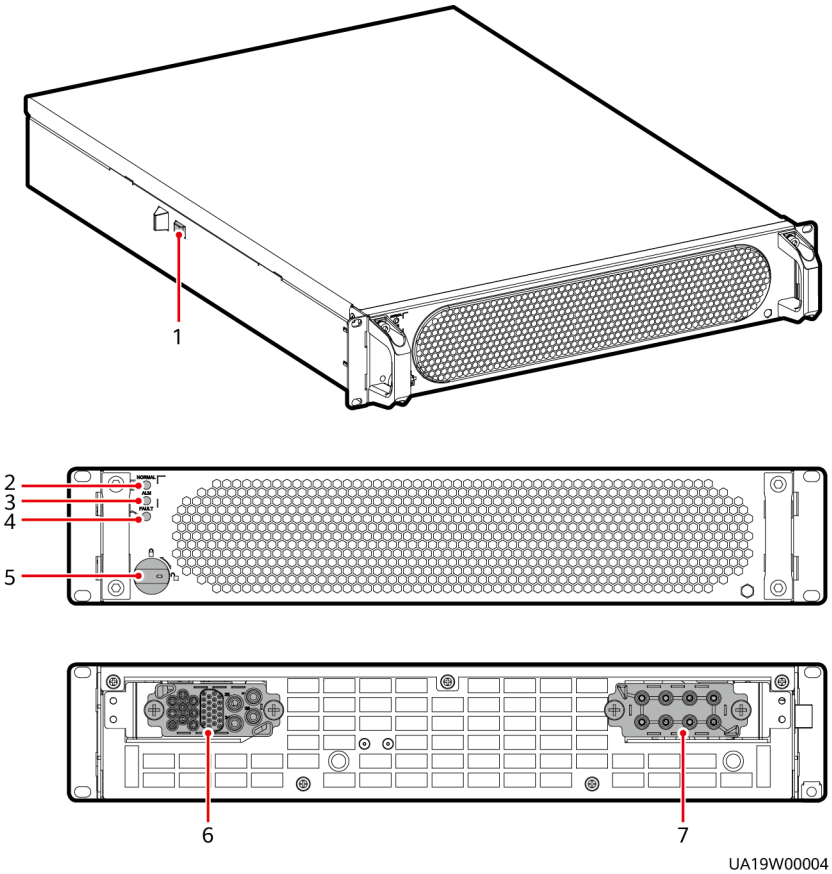

(1) Positioning lock (2) Run indicator (3) Alarm indicator (4) Fault indicator

(5) Ready switch (6) Output port (7) Input port

Table 2-2 Indicator description

Indicator	Color	Status	Description
Run indicator	Green	Steady on	The system is working in inverter mode.
		Blinking at long intervals	• The inverter is ready and in standby state (blinking at 0.5 Hz, on for 1s and off for 1s). • The inverter is not started (blinking at 0.2 Hz, on for 2.5s and off for 2.5s).

Indicator	Color	Status	Description
		Blinking at short intervals	The module is not configured, the inverter or rectifier software is being upgraded, or the inverter software is being upgraded (blinking at 4 Hz, on for 0.125s and off for 0.125s).
		Off	The rectifier software is being upgraded.
Alarm indicator	Yellow	Steady on	A minor alarm is generated for the inverter or rectifier.
		Off	There is no minor alarm for the inverter or rectifier, or the rectifier software is being upgraded.
Fault indicator	Red	Steady on	A critical alarm is generated for the inverter or rectifier.
		Off	There is no critical alarm for the inverter or rectifier, or the rectifier software is being upgraded.

Functions

The power module consists of a PFC rectifier and inverter. The power module performs AC-DC or DC-DC conversion on the mains and battery inputs, and stabilizes the bus voltage. The inverter converts DC inputs into AC sine wave outputs.

Specifications

- Dimensions (H x W x D): 86 mm x 442 mm x 620 mm
- Weight: < 21 kg
- Rated output capacity: 30 kVA/30 kW
- Power density: 20.64 W/inch^3

 Copyright © Huawei Technologies Co., Ltd.

2.3.3 Bypass Module

Appearance

Figure 2-10 Bypass module

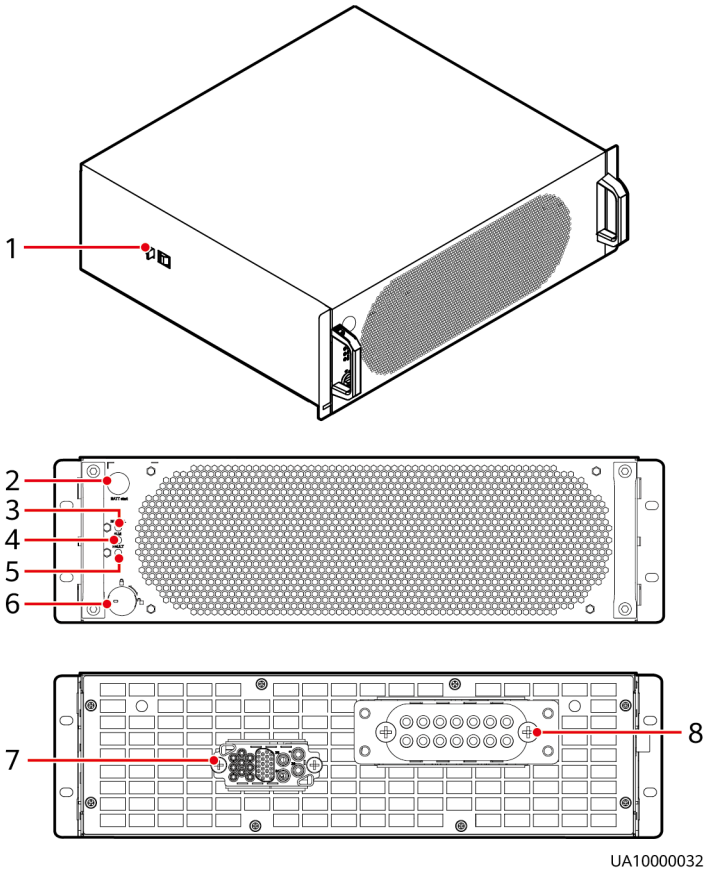

(1) Positioning lock (2) Cold start button (3) Run indicator (4) Alarm indicator

(5) Fault indicator (6) Ready switch (7) Signal port (8) Input and output ports

Table 2-3 Indicator description

Indicator	Color	Status	Description
Run indicator	Green	Steady on	The system is working in bypass mode.
		Blinking at long intervals	The bypass has no output (blinking at 0.2 Hz, on for 2.5s and off for 2.5s).

Indicator	Color	Status	Description
		Blinking at short intervals	The bypass is not configured or the DSP software is being upgraded (blinking at 4 Hz, on for 0.125s and off for 0.125s).
		Off	The bypass software is being upgraded.
Alarm indicator	Yellow	Steady on	A minor alarm is generated for the bypass.
		Off	There is no minor alarm for the bypass, or the software is being upgraded.
Fault indicator	Red	Steady on	A critical alarm is generated for the bypass.
		Off	There is no critical alarm for the bypass, or the software is being upgraded.

Functions

The bypass module supplies power in the following cases:

If the UPS is set to ECO mode and the bypass voltage is within the specified range, the UPS works in bypass mode.

If the power module overload times out, the UPS transfers to bypass mode.

Both the active and standby ECMs are abnormal.

The system fails to run properly and transfers to bypass mode.

A manual operation is performed to transfer to bypass mode.

Specifications

- Dimensions (H x W x D): 130 mm x 420 mm x 500 mm
- Weight: 19 kg
- Rated output capacity: 200 kVA

 Copyright © Huawei Technologies Co., Ltd.

2.3.4 Power Distribution Module

Figure 2-11 Power distribution module

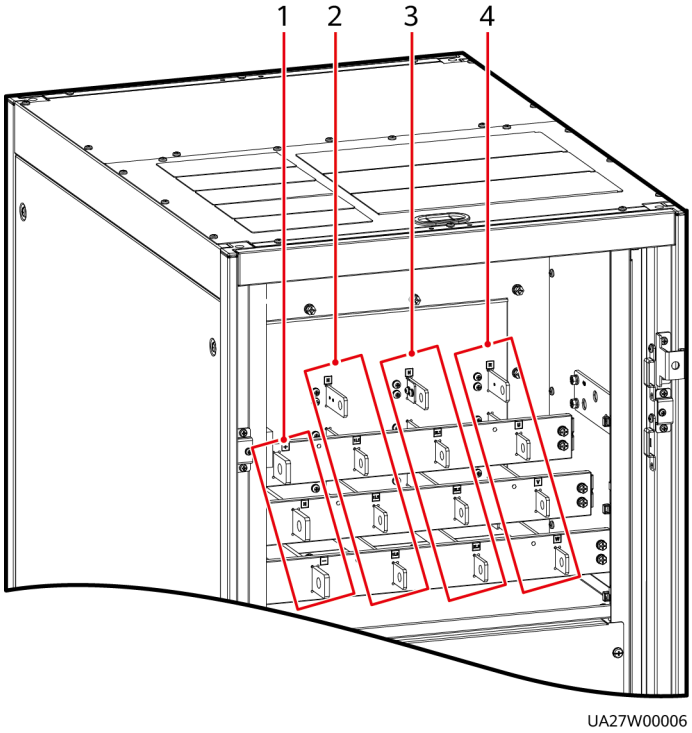

(1) Battery input terminals
(2) Mains input terminals
(3) Bypass input terminals
(4) Output terminals

Functions

- The power distribution module provides mains and bypass three-phase, four-wire input terminals and PE on the UPS rack, provides three-phase, four-wire output terminals for the whole system, and provides battery string input terminals.
- By using the maintenance bypass switch, the power module and bypass module inside the cabinet can be maintained without disconnecting power supply.
- You can short-circuit the mains and bypass input terminals using copper bars, so that two mains inputs merge into one mains input.

2.3.5 Control Module

2.3.5.1 Overview

In a standard configuration, the control module consists of two ECMs, one dry contact card, and one monitoring interface card (from left to right). The four cards are hot swappable. One subrack is reserved above the dry contact card. A backfeed protection card or dry contact extended card can be inserted into this subrack.

 Copyright © Huawei Technologies Co., Ltd.

Figure 2-12 Signal panel on the control module

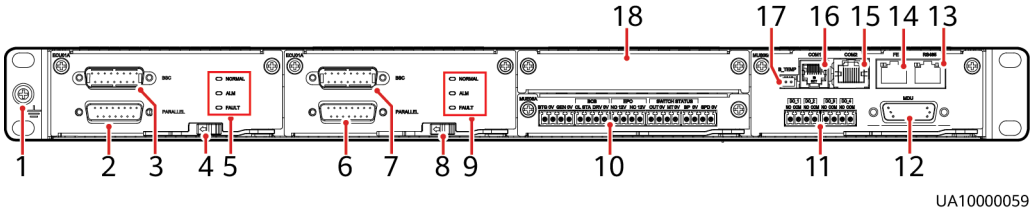

(1) Ground terminal	(2) Parallel port 1	(3) BSC port 1	(4) Ready switch on ECM 1
(5) Indicators for ECM 1	(6) Parallel port 2	(7) BSC port 2	(8) Ready switch on ECM 2
(9) Indicators for ECM 2	(10) Dry contact card	(11) Dry contacts	(12) MDU port
(13) RS485 port	(14) Fast Ethernet (FE) port	(15) COM2 port	(16) COM1 port
(17) Battery temperature sensor port	(18) Optional card subrack cover		

NOTE

Ports are protected by a security mechanism.

2.3.5.2 ECM

Appearance

The control module consists of two energy control modules (ECMs) in active/standby mode.

Figure 2-13 ECM

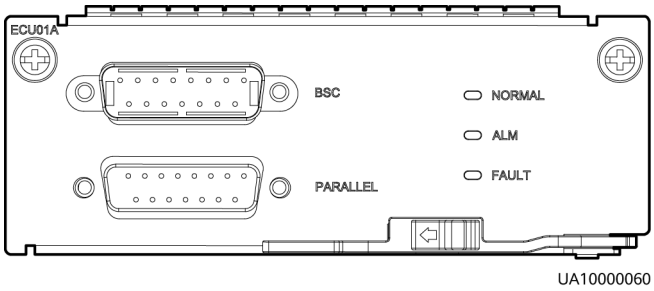

Table 2-4 Ports on the ECM

Silk Screen	Description
PARALLEL	The PARALLEL port transmits parallel signals between racks.

Silk Screen	Description
BSC	The BSC port is used in a dual-bus system to synchronize output frequencies and phases between UPS systems, ensuring that two buses can switch with each other. BSC cables are hot-swappable.

NOTE

For a single UPS, the parallel cable is not needed.

Table 2-5 Indicator description

Indicator	Color	Status	Description
NORMAL	Green	Steady on	This ECM is the active ECM.
		Blinking at 0.5 Hz	This ECM is the standby ECM and it is ready.
		Off	This ECM is not ready or the software of this ECM is being upgraded.
		Blinking at 4 Hz	The software of the ECM is being upgraded or not configured.
ALM	Yellow	Steady on	The ECM has a minor alarm, but it does not need to be replaced.
		Off	The ECM has no minor alarm or the software of the ECM is being upgraded.
FAULT	Red	Steady on	The ECM has a critical alarm.
		Off	The ECM has no critical alarm or the software of the ECM is being upgraded.

Functions

- As a control interface for the entire system, the ECM communicates with each module and provides a bus to communicate with the dry contact card. The ECM ensures equalized output currents between modules so that load power is equally shared.
- Provides module running information for the MDU.
- Controls the running of a single UPS5000 and a parallel system, and reports the UPS5000 status information to other monitoring modules.
- The system provides three types of CAN communication: monitoring CAN communication, intra-rack parallel CAN communication, and inter-rack parallel CAN communication.

 Copyright © Huawei Technologies Co., Ltd.

Figure 2-14 Logical connections for CAN communication

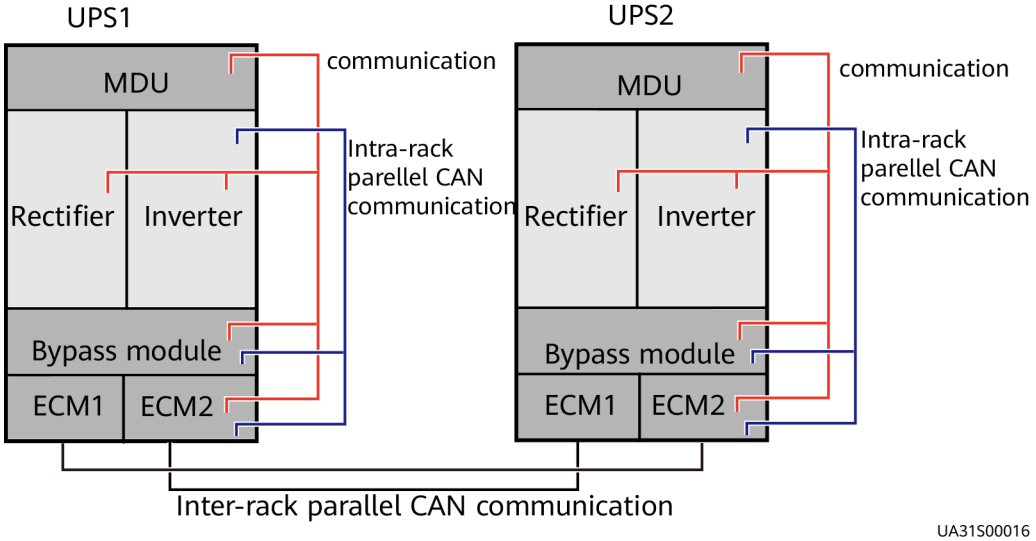

Specifications

- Hot-swappable
- 1 U high

2.3.5.3 Dry contact card

Appearance

Figure 2-15 Dry contact card

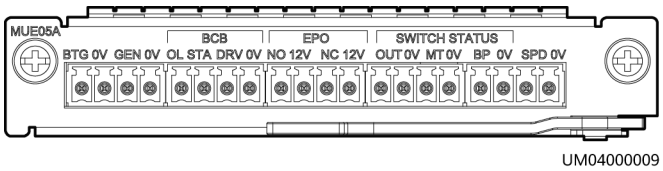

Table 2-6 Ports on the dry contact card

Silk Screen	Description	Status	Initial Status
BTG	Port for detecting battery grounding faults	• Connected: battery grounding fault • Disconnected: no battery grounding fault	Disconnected
0V	Port for signal ground		
GEN	Port for detecting diesel generator (D.G.) mode	• Connected: D.G. mode • Disconnected: non-D.G. mode	Disconnected
0V	Port for signal ground		

Silk Screen	Description	Status	Initial Status
BCB_OL	Port for detecting the BCB box	• Grounded: BCB box connected • Disconnected: BCB box not connected	Grounded
BCB_STA	Port for monitoring the battery switch	• Connected: battery switch ON • Disconnected: battery switch OFF	Disconnected
BCB_DRV	Controls battery circuit breaker trip. When the voltage is +12 V, the circuit breaker trips.	• 0 V: battery switch not tripped • 12 V: battery switch tripped	0 V
BCB_0V	Port for signal ground		
EPO_NO	Emergency power-off (EPO) port	If the normally open (NO) port is connected to the EPO_12V port, EPO is triggered.	Disconnected
EPO_12V	+12 V		
EPO_NC	EPO port	If the normally closed (NC) port is disconnected from the EPO_12V port, EPO is triggered.	Connected
EPO_12V	+12 V		
SWITCH STATUS_OUT	Port for monitoring the UPS output circuit breaker	• Connected: circuit breaker ON • Disconnected: circuit breaker OFF	Connected
SWITCH STATUS_0V	Port for signal ground		
SWITCH STATUS_MT	Port for monitoring the maintenance circuit breaker	• Disconnected: circuit breaker ON • Connected: circuit breaker OFF	Disconnected
SWITCH STATUS_0V	Port for signal ground		
SWITCH STATUS_BP	Port for monitoring the bypass input circuit breaker	• Connected: circuit breaker ON	Connected

 Copyright © Huawei Technologies Co., Ltd.

Silk Screen	Description	Status	Initial Status
SWITCH STATUS_0V	Port for signal ground	• Disconnected: circuit breaker OFF	
SPD	Port for monitoring the input AC surge protective device (SPD)	• Connected: SPD enabled • Disconnected: SPD disabled	Connected
0V	Port for signal ground		

NOTE

- The dry contact interface card takes effect only after it is set on the monitoring system. Set the unused dry contact signal to the unused status.
- Set the EPO port to NO or NC as required.
- When multiple UPSs are paralleled, all dry contact signals to be used need to connect to each UPS.
- Single cables require dual-insulated twisted cables. If the length of a power cable is within 25–50 m, its cross-sectional area must be 0.5 mm^2 to 1.5 mm^2.

Functions

The dry contact card allows the UPS to detect and manage the switch status of the battery system (including the external battery switch) and implement remote emergency power-off (EPO).

Specifications

- Hot-swappable
- 0.5 U high

2.3.5.4 Monitoring interface card

NOTICE

- The FE port resembles the RS485 port. Follow the silk screen when connecting communications cables as, if the RS485 port is mistaken for the FE port during cable connection, the WebUI cannot be connected. Conversely, if the FE port is mistaken for the RS485 port during cable connection, RS485 communication fails.
- Dry contact signals take effect after you set them. Disable unused dry contact signals on the monitoring system.
- In a parallel system, ensure that used dry contacts properly connect to each UPS.

The monitoring interface card provides external ports as well as monitoring and control functions for the MDU. The ports include the ambient temperature and

 Copyright © Huawei Technologies Co., Ltd.

humidity sensor port, iBattery port, FE port, battery temperature monitoring port, and network management port. The MDU monitors the UPS, allows users to set parameters, delivers commands, reports information, and displays the UPS key information and parameters on the LCD.

Figure 2-16 Monitoring interface card

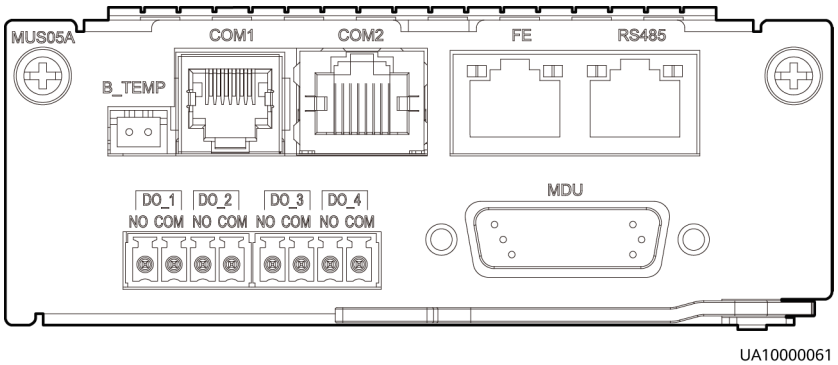

NOTE

DO_1 to DO_4 meet the maximum voltage and current requirements of 30 V DC/1 A or 60 V DC/0.5 A.

Table 2-7 Ports on the monitoring interface card

Port	Silk Screen	Description
DO_1	NO	• DO_1, DO_2, DO_3, and DO_4 indicate alarm outputs. Their default values are Critical alarm, Minor alarm, Bypass mode, and Battery mode, respectively. • It can be set to **Disable**, **Critical alarm**, **Minor alarm**, **Bypass mode**, **Battery mode**, **Low batt. volt.**, **Low battery SOC**, **Abnormal mains**, **Sys maint breaker enable**, **Sys outp breaker enable**, **Maint. breaker closed**, **No power supplied**, **Mains supplies power**, **ECO mode**, **Battery test**, and **Batt. Volt. Below Thres.**. • Configure power segment settings based on backup time.
	COM	
DO_2	NO	
	COM	
DO_3	NO	
	COM	
DO_4	NO	
	COM	
DB26	MDU	Provides FE, RS485, I2C, and CAN signals.
Battery temperature sensor port	B_TEMP	Connects to an indoor battery temperature sensor.
Southbound communications port 1	COM1	• Supported protocol: Modbus-RTU. • Connects to an ambient temperature and humidity sensor over two wires.

Port	Silk Screen	Description
Southbound communications port 2	COM2	• Supported protocol: Modbus-RTU. • Connects to a southbound device, such as an iBattery.
Network port	FE	• Supported protocols: Modbus-TCP, HTTPS, and SNMP. • Connects to the network port on a PC. • Network port for connecting to the web service and for SNMP networking.
Northbound communications port	RS485	• Supported protocol: Modbus-RTU. • Connects to a northbound network management device or a third-party network management device over two wires.

NOTE

- Signal cables must be double-insulated twisted cables. If the cable length is 25–50 m, the cross-sectional area must be 0.5–1.5 mm^2.
- RS485 cables and FE cables must be shielded cables.

Figure 2-17 and **Figure 2-18** are recommended wiring methods for DO ports.

Figure 2-17 Wiring method 1

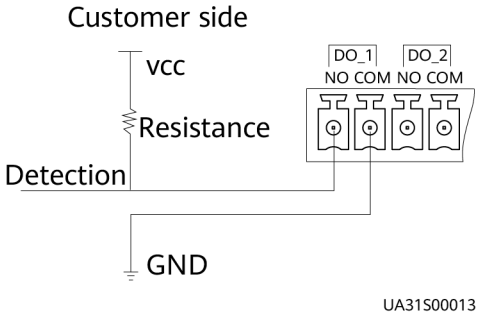

Figure 2-18 Wiring method 2

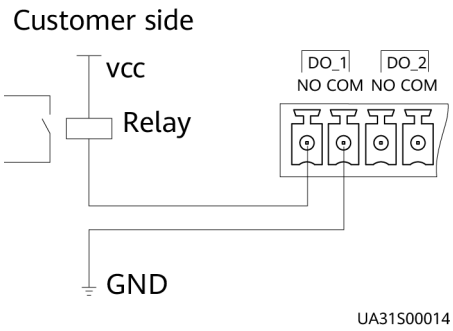

Figure 2-19 COM1 pins

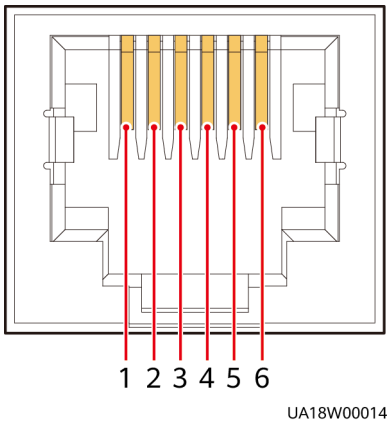

Table 2-8 COM1 pin definition

Pin	Description
1	GND
2	N/A
3	RS485–
4	RS485+
5	N/A
6	12V_PORT

Figure 2-20 COM2 pins

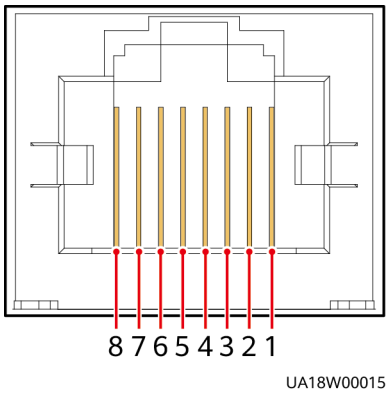

Table 2-9 COM2 pin definition

Pin	Description
1	RS485+
2	RS485–

Pin	Description
3	N/A
4	RS485+
5	RS485–
6	GND
7	CANH0
8	CANL0

Figure 2-21 RS485 pins

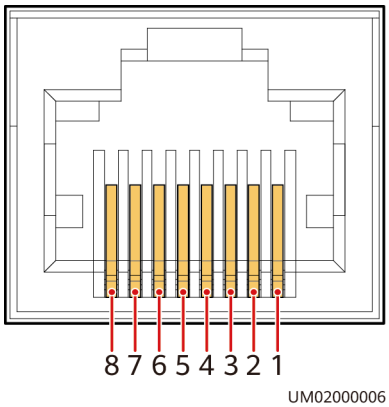

Table 2-10 RS485 pin definition

Pin	Description
1	RS485_T+
2	RS485_T–
3	N/A
4	RS485_R+
5	RS485_R–
6	GND
7	N/A
8	N/A

 Copyright © Huawei Technologies Co., Ltd.

NOTE

If cables are prepared onsite, follow the three methods below:

- Connect pin 1 and pin 2. Pin 1 connects to RS485+ and pin 2 connects to RS485–.
- Connect pin 4 and pin 5. Pin 4 connects to RS485+ and pin 5 connects to RS485–.
- Connect pins 1, 2, 4, and 5. Twist cables to pin 1 and pin 4 into one cable and then connect it to RS485+. Twist cables to pin 2 and pin 5 into one cable and then connect it to RS485–.

2.3.6 MDU

Appearance

Figure 2-22 MDU

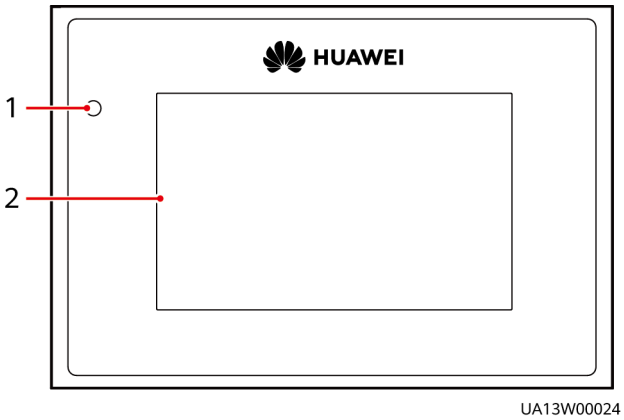

(1) Status indicator (2) LCD touchscreen

Table 2-11 Status indicator

Status	Color	Meaning
On	Red	A critical alarm has been generated, and the buzzer sounds continuously.
	Yellow	A minor alarm has been generated, and the buzzer buzzes at 2 Hz.
	Green	The UPS is running properly or a warning has been generated.
Off	N/A	The MDU is powered off.

NOTE

The indicator on the MDU panel is yellow when the bypass supplies power in non-ECO mode.

Figure 2-23 MDU ports

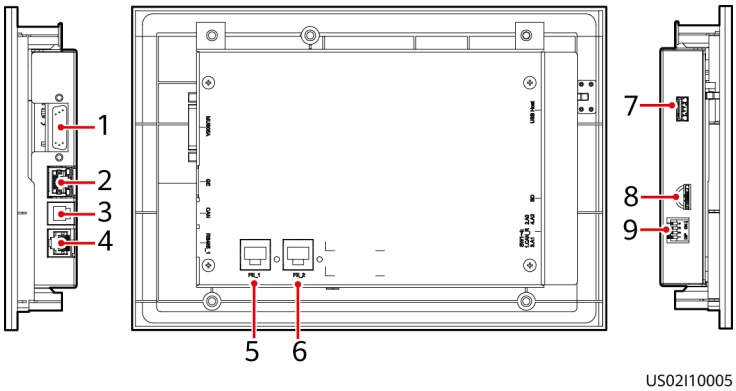

Table 2-12 Description of MDU ports

No.	Port Name	Description
1	MUS05A (DB26)	Connects to the MDU and monitoring interface card
2	GE	Network port
3	CAN	Reserved
4	RS485_1	Reserved
5	FE_1	Reserved
6	FE_2	Reserved
7	USB Host	• After installing the WiFi module, locally connect to the UPS over the Service Expert app. Obtain the initial startup password during deployment. View or obtain UPS running information during preventive maintenance. **NOTE** Only Huawei service engineers or authorized service engineers are allowed to use the WiFi module. To ensure security, remove the WiFi module immediately after use. • Insert the USB flash drive, import and export the configuration file, export run logs, and upgrade software.
8	SD	Reserved
9	DIP switch	Implements specific functions by using the DIP switch and specific buttons; controls the CAN communication build-out resistor in a parallel system

Functions

The monitor display unit (MDU) allows for general UPS operations, parameter setting, viewing of running status and alarms, and so on.

Specifications

Dimensions (H x W x D): 175 mm x 264 mm x 40 mm

2.4 Typical configurations

Table 2-13 Typical UPS configurations

Configuration	Application Scenario
Single UPS	Supplies power to common loads.
Parallel system	Supplies power to important loads in small- and medium-sized data centers. It features high availability and strong transient overload capability.
Dual-bus system	The dual-bus system is suitable for scenarios where high availability requirements are posed for power supply. The dual-bus system supplies power to important loads in large- and medium-sized equipment rooms and data centers. In addition to common parallel system advantages, the dual-bus system also provides outstanding availability and eliminates bottleneck failures. However, configuration of the dual-bus system is complex.

NOTE

A 1+1 parallel system is a typical configuration. You can set the number of requisite UPSs and redundant ones on the LCD or WebUI.

2.4.1 Single UPS

This series uses a modular design in which multiple power modules are connected in parallel to deliver a high loading capacity. If a single power module is faulty, the other power modules continue working. When the load power is small, even a single UPS can provide redundant capacity, which ensures high reliability.

2.4.2 Parallel System

In a parallel system, the mains input, bypass input, and AC output terminals between cabinets are connected in parallel. Energy control modules (ECMs) on each UPS are connected over parallel cables. The parallel connections synchronize the UPS outputs to supply power to loads. If one UPS fails, the other UPSs continue supplying power to loads.

 Copyright © Huawei Technologies Co., Ltd.

Figure 2-24 Conceptual diagram of an N+X parallel system

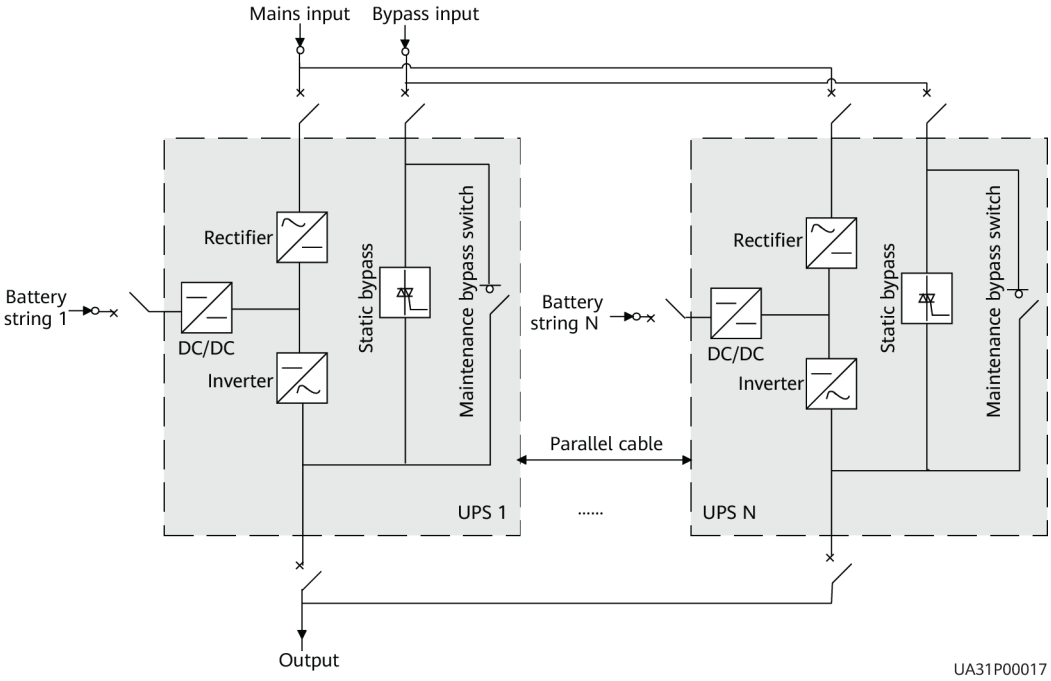

2.4.3 Dual-Bus System

A dual-bus system consists of two independent UPS systems. Each of these UPS systems in turn consists of one or more UPSs connected in parallel. Of the two UPS systems, one is a master system, and the other is a slave system. This design makes the dual-bus system highly reliable and suitable for loads with multiple input terminals. An optional static transfer switch (STS) can be installed to start the bus synchronization controller (BSC). The UPS systems work in normal mode or bypass mode.

Figure 2-25 Conceptual diagram of a dual-bus system

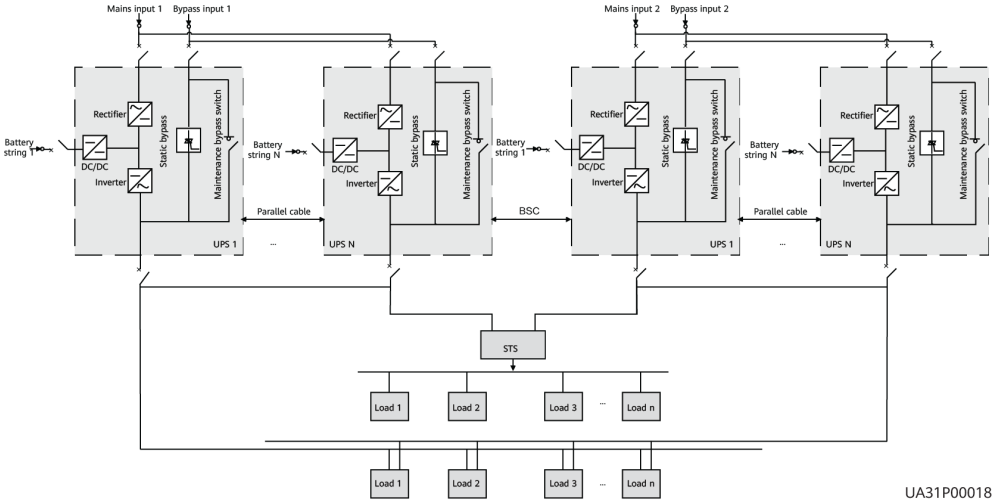

2.5 Optional Components

The UPS5000-E provides a variety of optional components to address various customer requirements. **Table 2-14** lists the optional components.

Table 2-14 Optional components

Component	Model/ Specification	Function
BCB box	PDC-0250DC0384BXA PDC-0400DC0384BXA PDU8000-0125DCV8-BXA001 PDU8000-0250DCV8-BXA001 PDU8000-0400DCV8-BXA001	Controls the connection between battery strings and the UPS. Provides overload protection, short-circuit protection, and remote trip control.
Battery bus bar (BBB) box	PDU8000-0630DCV8-BGA001 PDU8000-1250DCV8-BGA001 PDU8000-2000DCV8-BGA001	Converges the energy of multiple battery strings.
Surge protective module	SPD	The surge protective module consists of two groups of SPD circuit breakers and SPDs, which provide surge protection for mains input and bypass input respectively. The surge protective capacity reaches 5 kA if a surge protective module is configured.
ECM extended subrack	UPSM000ECM00	Install this subrack when the UPS is equipped with a backfeed protection card and dry contact extended card.
Dry contact extended card	UPSDMDRYIO00	Provides extended monitoring ports: five relay output ports and five input ports.
Backfeed protection card	UPSDSDRYIO00	Detects mains and bypass backfeed and provides protection.
Antiseismic kit	N/A	Reinforces the cabinet so that the cabinet meets the requirements of 9 degree seismic fortification intensity.

 Copyright © Huawei Technologies Co., Ltd.

Component	Model/ Specification	Function
Ambient temperature and humidity sensor	ENR1DETA MODULE	Collects ambient temperature and humidity, and can be applied to batteries.
Battery grounding failure detector	N/A	Detects current leakage and generates alarms. When equipped with a remote trip switch, the detector protects devices and prevents fire outbreak. Detects battery grounding failures and generates alarms when the ground leakage current exceeds the specified value.
iBattery	N/A	Collects battery information, such as battery status data, from the downstream BIM groups through wireless communication and sends the data to the ECC and the third-party network management system (NMS) through COM or PoE ports. For details, see the document delivered with the iBAT.
BSC cable	5 m, 10 m, 15 m or 60 m	Transmits bus synchronization signals in a dual-bus system.
Parallel cable	5 m, 10 m, or 15 m	Connects UPSs in parallel.
Top air-flow cabinet	N/A	Used for top air exhaust and allows the UPS to be installed against a wall.
Cable entry cabinet	N/A	If a cable entry cabinet is installed, cables can be routed in and out from the bottom of the cabinet.

NOTE

The ECM extended subrack does not support onsite installation. If you require this optional component, inform Huawei when you purchase the UPS. Huawei installs it before delivery.

 Copyright © Huawei Technologies Co., Ltd.

3 Installation

3.1 Installation Preparations

3.1.1 Site

3.1.1.1 Dimensions

Ensure that the floor or installation support can bear the weight of the UPS5000, batteries, and battery racks. The weight of batteries and battery racks depends on the UPS configuration for the site.

 Copyright © Huawei Technologies Co., Ltd.

Figure 3-1 UPS dimensions (unit: mm)

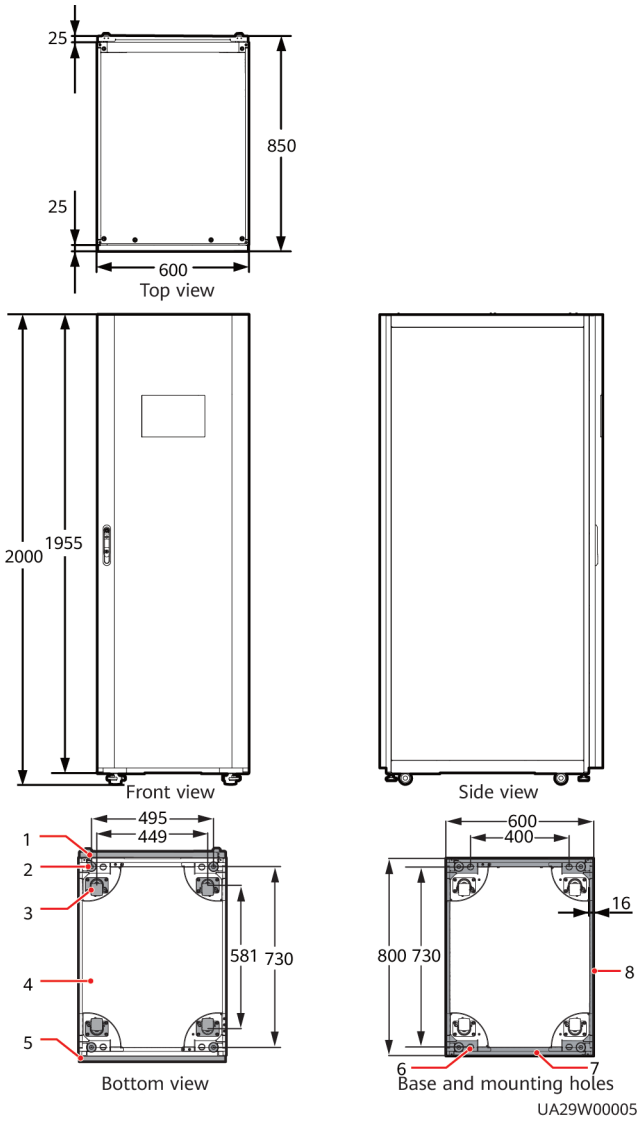

(1) Front door	(2) Foot	(3) Caster	(4) Base
(5) Rear panel	(6) Base installation hole	(7) Beam	(8) Side beam

3.1.1.2 Installation Environment

- Do not install the UPS in high temperature, low temperature, or damp environments.
- Install the UPS away from water sources, heat sources, and flammable or explosive materials. Keep the UPS away from direct sunlight, dust, volatile gases, corrosive materials, and air dense with salt particles.
- Do not install the UPS in environments with conductive metal scraps in the air.
- The optimal operating temperatures for valve-regulated lead-acid batteries (VRLA batteries) are 20–30°C. Operating temperatures higher than 30°C shorten the battery lifespan and operating temperatures lower than 20°C reduce the battery backup time.

3.1.1.3 Installation Clearances

Reserve the following clearances around the cabinet to facilitate operations and ventilation:

- Reserve at least 800 mm from the front of the cabinet to facilitate ventilation and operations. Reserve at least 500 mm from the rear of the cabinet for facilitate ventilation.
- Reserve at least 500 mm from the top of the cabinet for operations.

Figure 3-2 Reserved clearances (unit: mm)

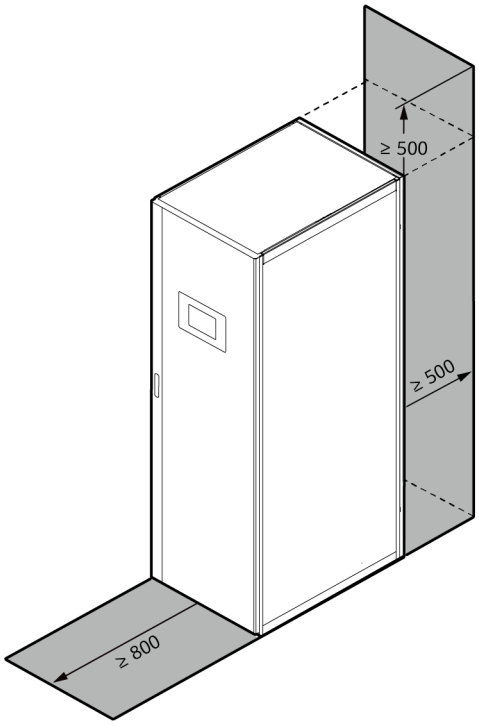

3.1.2 Tools and Instruments

CAUTION

Insulate installation tools to prevent electric shocks.

Prepare the following tools and meters indicated in **Table 3-1** for installation.

Table 3-1 Tools and meters

Tools and Meters			
Electric pallet truck	Manual pallet truck	Ladder	Rubber mallet

Tools and Meters			
	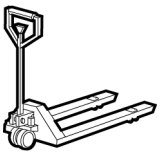		
Hammer drill and drill bit Φ16	Hand-held electric drill	Alloy hole saw	Heat gun
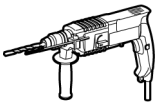	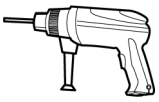	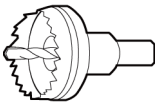	
Diagonal pliers	Crimping tools	Wire stripper	Electric hydraulic pliers
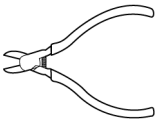	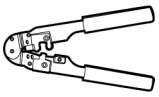	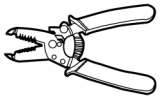	
Clamp meter	Multimeter	Cable tie	Level instrument
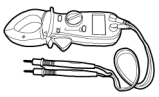			
Polyvinyl chloride (PVC) insulation tape	Cotton cloth	Label	Electrician's knife
	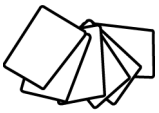	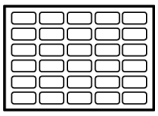	
Electrostatic discharge (ESD) gloves	Protective gloves	Insulated gloves	Insulation protective shoes
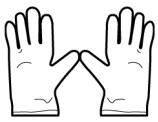			
Torque screwdriver	Cable cutter	Brush	Flat-head screwdriver (2–5 mm)

 Copyright © Huawei Technologies Co., Ltd.

Tools and Meters			
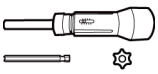	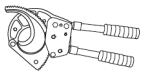		
Phillips screwdriver (M3/M4/M5/M6/M8)	Insulated torque wrench (M6/M8/M12/M16)	Heat shrink tubing	Insulated adjustable wrench
	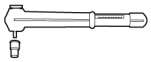	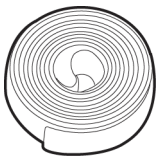	

NOTE

Table 3-1 lists only the common tools for installation and cable connection. For more dedicated tools required, see the corresponding component manuals. Prepare tools based on site requirements.

3.1.3 Preparing Power Cables

NOTICE

- The UPS can generate large leakage currents. A circuit breaker that provides leakage current protection is not recommended.
- If multiple UPSs are to be connected in parallel, input and output power cables for each UPS should have the same length and specifications.

Table 3-2 lists the recommended cross-sectional areas for power cables. Note that the currents listed are measured at a rated voltage of 380 V.

Table 3-2 Recommended cross-sectional areas for power cables

Item			Specifications			
			30 kVA	60 kVA	90 kVA	120 kVA
Mains input	Mains input current (A)		55	110	165	220
	Recommended cross-sectional area (mm^2)	L1	4 x 10	4 x 35	4 x 70	4 x 95
		L2				
		L3				

Item			Specifications			
			30 kVA	60 kVA	90 kVA	120 kVA
		N				
Bypass input	Bypass input current (A)		45	91	136	182
	Recommended cross-sectional area (mm^2)	L1	4 x 10	4 x 25	4 x 50	4 x 70
		L2				
		L3				
		N				
Output	Output current (A)		45	91	136	182
	Recommended cross-sectional area (mm^2)	U	4 x 10	4 x 25	4 x 50	4 x 70
		V				
		W				
		N (When the UPS connects to a non-linear load, increase the cross-sectional area.)				
Battery input (VRLA battery)	Nominal discharge current (A)		66	132	197	263
	Maximum discharge current (A)		79	158	236	315
	Recommended cross-sectional area (mm^2)	+	3 x 16	3 x 50	3 x 70	3 x 120
		N				
		–				
Ground cable	Recommended cross-sectional area (mm^2)	PE	10	16	35	50

- When selecting, connecting, and routing power cables, follow local safety regulations and rules.
- When the external conditions change, for example, the cable layout or ambient temperatures, perform verification in accordance with the IEC-60364-5-52 or the local regulations.
- If the rated voltage is 400 V, multiply the currents by 0.95. If the rated voltage is 415 V, multiply the currents by 0.92.

 Copyright © Huawei Technologies Co., Ltd.

- When the primary loads are non-linear loads, increase the cross-sectional areas of the neutral wires 1.5–1.7 times.
- The nominal battery discharge current refers to the current of forty 12 V batteries at 480 V in standard configuration.
- The maximum battery discharge current refers to the current when forty 12 V batteries in standard configuration, that is, two hundred and forty 2 V battery cells (1.67 V/cell), stop discharging.
- When the mains input and bypass input share a power source, configure input power cables as mains input power cables. In addition, cables listed in **Table 3-2** apply only to the following conditions:
  - The cables are installed along the wall or on the floor (IEC-60364-5-52 C standards).
  - The ambient temperature is 30°C.
  - The AC voltage loss is less than 3%, and the DC voltage loss is less than 1%. The recommended cable diameters in **Table 3-2** meet the basic through-current requirements. Users should evaluate the line voltage loss based on the actual cable length. If the voltage loss exceeds the requirements, increase the cable diameter properly.
  - The cables are single- or multi-core 90°C soft power cables with a copper conductor.

Table 3-3 Power cable terminal requirements

Port Description	Connection Method	Bolt Specifications	Bolt Hole Diameter	Bolt Length	Torque
Mains input	Crimped OT terminals	M10	11 mm	30 mm	26 N·m
Bypass input	Crimped OT terminals	M10	11 mm	30 mm	26 N·m
Battery input	Crimped OT terminals	M12	13 mm	35 mm	46 N·m
Output	Crimped OT terminals	M10	11 mm	30 mm	26 N·m
PE	Crimped OT terminals	M10	11 mm	30 mm	26 N·m

Table 3-4 Recommended upstream input and downstream output circuit breakers

UPS Capacity	Component	Specifications[a]
30 kVA	Mains input circuit breaker	63 A/3P
	Bypass input circuit breaker	63 A/3P
	Downstream output circuit breaker	63 A/3P

 Copyright © Huawei Technologies Co., Ltd.

UPS Capacity	Component	Specifications[a]
60 kVA	Mains input circuit breaker	125 A/3P
	Bypass input circuit breaker	125 A/3P
	Downstream output circuit breaker	125 A/3P
90 kVA	Mains input circuit breaker	200 A/3P
	Bypass input circuit breaker	200 A/3P
	Downstream output circuit breaker	200 A/3P
120 kVA	Mains input circuit breaker	250 A/3P
	Bypass input circuit breaker	250 A/3P
	Downstream output circuit breaker	250 A/3P
a: recommended when the short-circuit current where the switch is located is less than 36 kA		

NOTE

- The input upstream circuit breakers recommended in Table 3-4 are for reference only.
- If multiple loads are connected, specifications for branch circuit breakers must not exceed the recommended specifications.
- The circuit breaker selection principle is to protect loads and cables, and the cascading principle is to realize specific protection.

3.1.4 Unpacking and Checking

Context

NOTICE

- To prevent the UPS from falling over, secure it to a pallet truck using ropes before moving it.
- To prevent shocks or falls, move the UPS gently. After placing the UPS in the installation position, unpack it and take care to prevent scratches. Keep the UPS steady during unpacking.
- To prevent dust from settling on the UPS, leave the original plastic coat on until installation is required.

 Copyright © Huawei Technologies Co., Ltd.

Procedure

Step 1 Use a pallet truck to transport the UPS to the installation position.

Step 2 Check the UPS packing.

Step 3 Hold the sliding plate steady. Cut and remove the binding tapes. Put down the sliding plate gently. See **Figure 3-3**.

Figure 3-3 Removing binding tapes

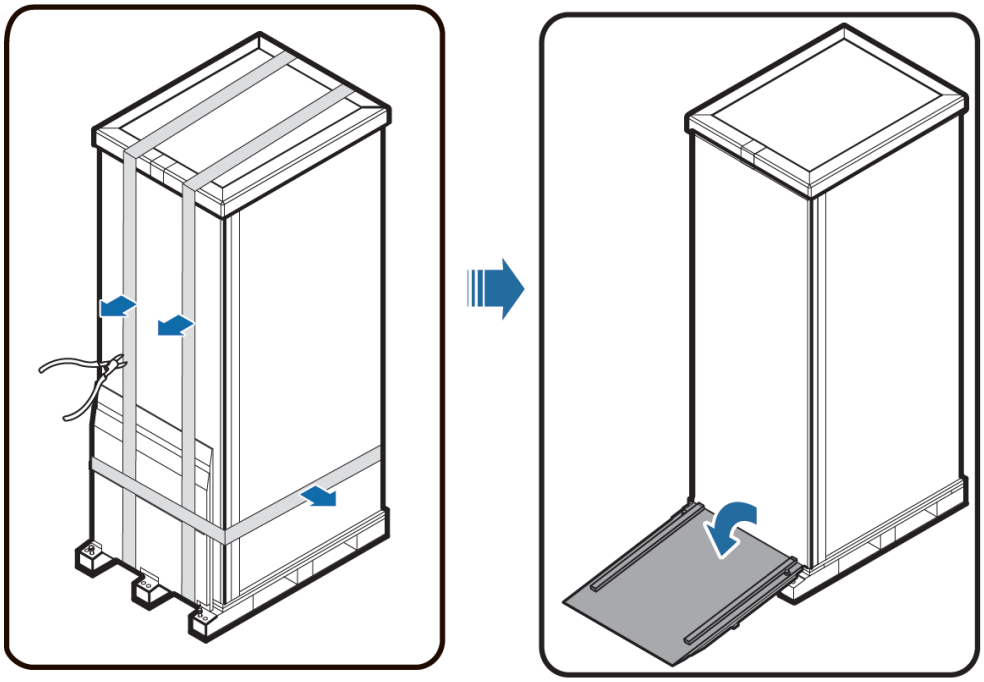

UA10000044

Step 4 Remove packing materials, as shown in **Figure 3-4**.

Figure 3-4 Removing packing materials

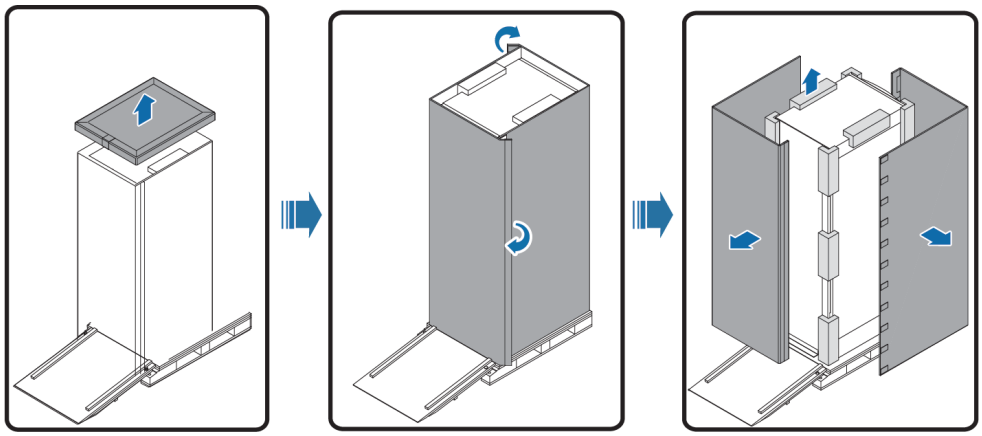

UA10000045

Step 5 Remove the plastic bag and take out the fittings box.

Step 6 Check that the UPS is intact.

 Copyright © Huawei Technologies Co., Ltd.

1. Visually inspect the UPS appearance for shipping damage. If it is damaged, notify the carrier immediately.
2. Check that all fittings comply with the packing list. If some fittings are missing or do not comply with the packing list, record this information and contact your local Huawei office immediately.

Step 7 After confirming that the UPS is intact, remove the front and rear L-shaped brackets that secure the UPS to the pallet, and secure the sliding plate to the pallet using the two M12 bolts removed before.

Figure 3-5 Removing the L-shaped bracket

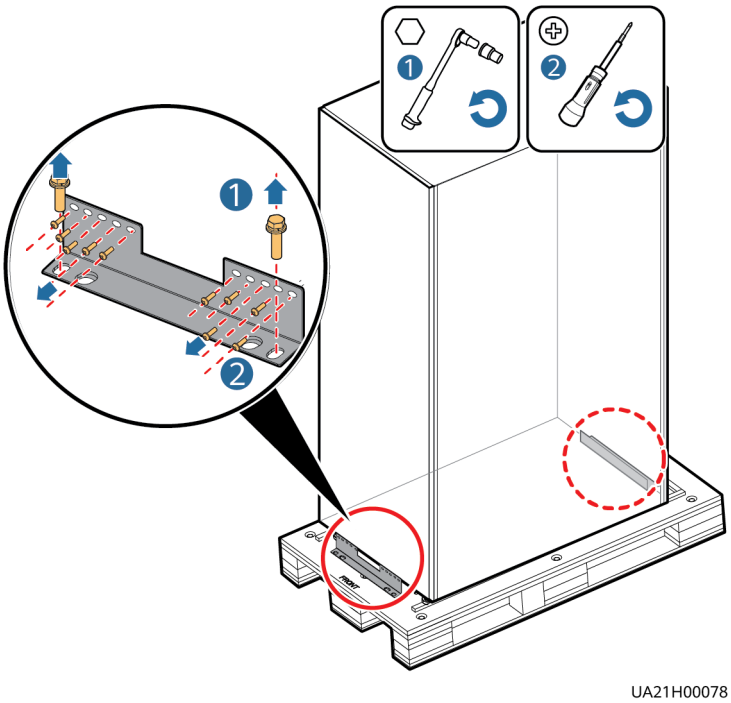

Figure 3-6 Securing a sliding plate

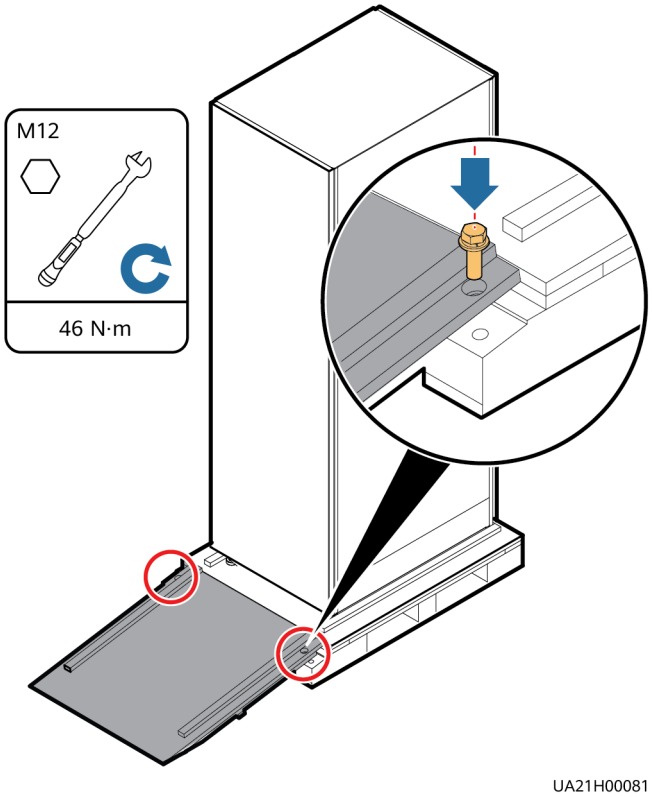

NOTE

Ensure that the two screws are installed reliably. Otherwise, the sliding plate may shift when the UPS slides down.

Step 8 Raise the four anchor bolts to the highest position using an adjustable wrench, as shown in **Figure 3-7**.

Figure 3-7 Raising the leveling feet

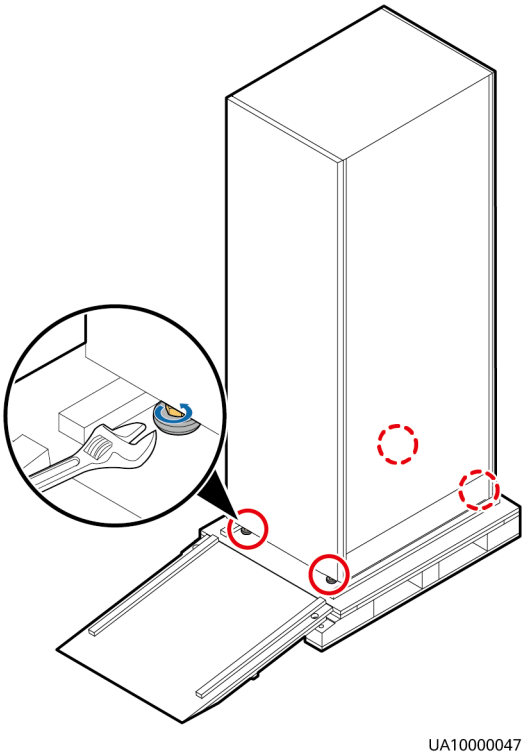

Step 9 Push the cabinet along the sliding plate to the floor.

----End

3.2 Installing a Single UPS

3.2.1 Installing the Cabinet

Secured Installation

Step 1 Determine the position for installing the cabinet. Mark mounting holes for the UPS based on the following figures:

Figure 3-8 UPS mounting holes positioning (unit: mm)

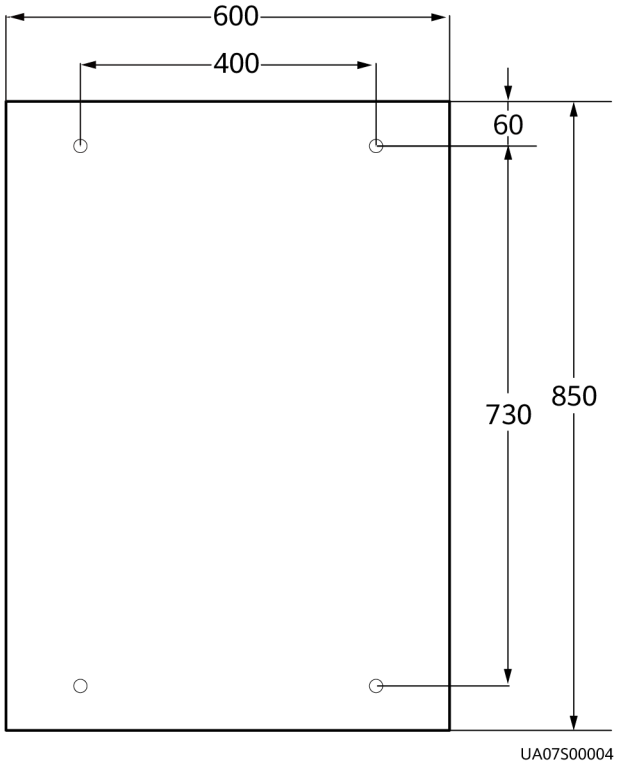

Step 2 Use a hammer drill to drill four holes for installing expansion bolts and then install four expansion bolts in the holes. **Figure 3-9** shows the composition of an expansion bolt, and **Figure 3-10** shows how to install an expansion bolt.

Figure 3-9 Expansion bolt composition

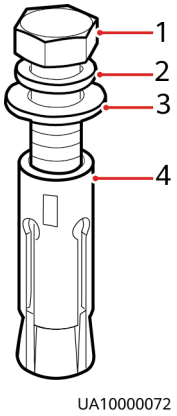

(1) M12 bolt (2) Spring washer (3) Flat washer (4) Expansion sleeve

NOTICE

Ensure the expansion tube of the expansion bolts fits completely into the hole. The expansion sleeves must be completely buried under the ground to properly facilitate subsequent installation.

Figure 3-10 Installing expansion bolts (unit: mm)

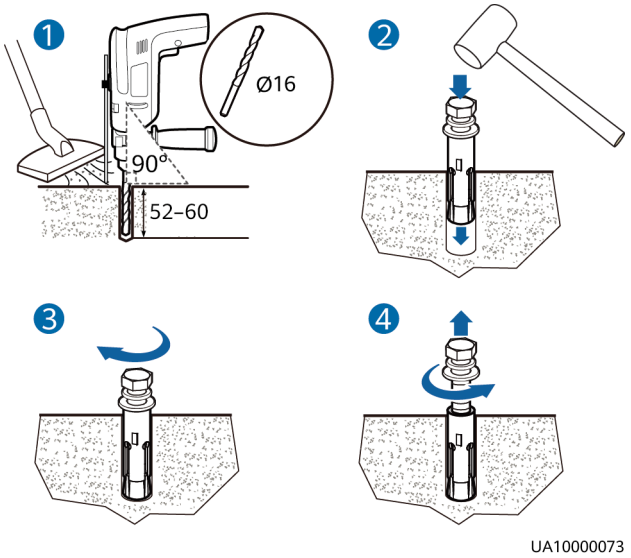

1. Drill holes in the ground by using a hammer drill. The hole depth is 52 mm to 60 mm.
2. Partially tighten the expansion bolt and vertically insert it into the hole. Hit the expansion bolt using a rubber mallet until the expansion sleeve is fully inserted into the hole.
3. Partially tighten the expansion bolt.
4. Remove the bolt, spring washer, and flat washer.

Step 3 Move the cabinet over its castors to the installation position.

Step 4 (Optional) If the castors of the UPS need to be lifted from the ground, perform steps **Step 1** to **Step 2** in **Unsecured Installation**.

Step 5 Remove the rear panel of the cabinet, and then open the front door.

Figure 3-11 Removing the rear panel

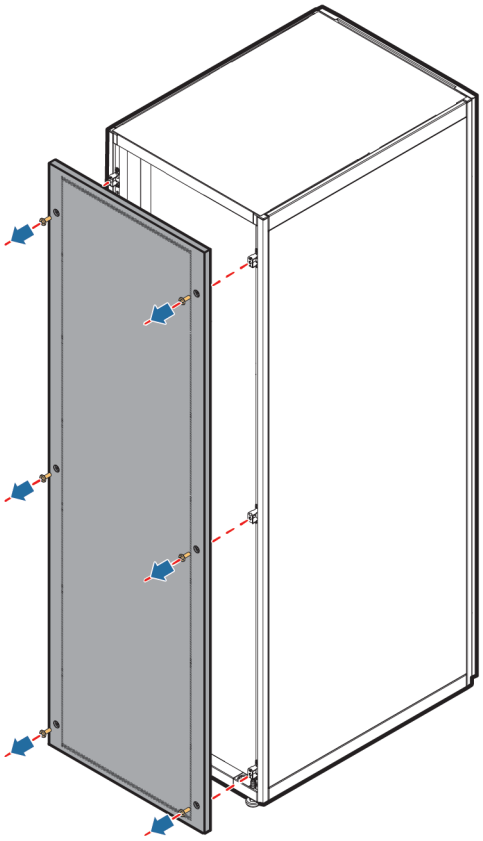

UA10000051

Step 6 Remove the four plugs from the bottom of the cabinet (two at the front and two at the rear).

Figure 3-12 Removing plugs

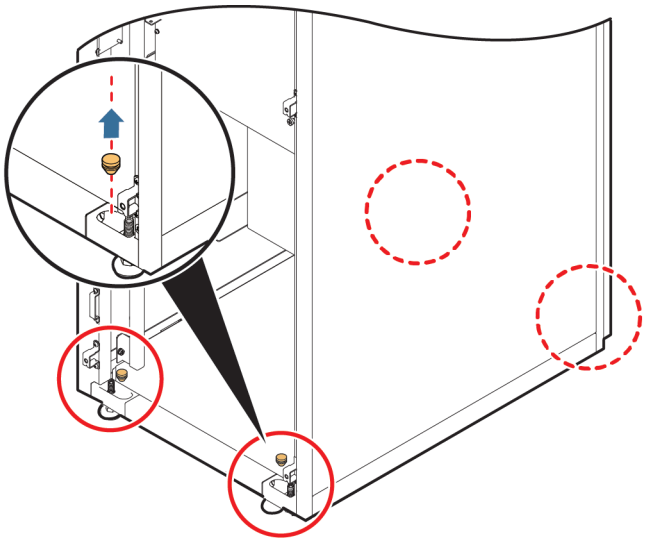

UA10000052

Step 7 Insert four M12x115 expansion bolts into the expansion bolt holes in the floor, and tighten the expansion bolts in the direction.

 Copyright © Huawei Technologies Co., Ltd.

Figure 3-13 Tightening expansion bolts

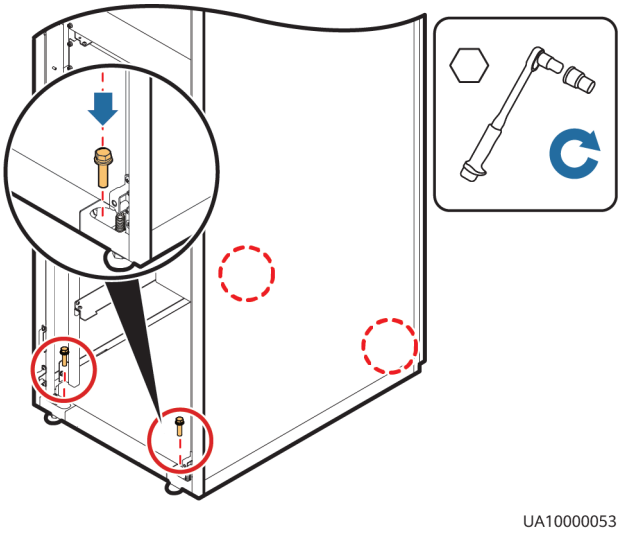

----End

Unsecured Installation

Step 1 Adjust the four anchor bolts at the bottom of the UPS cabinet until all the four castors at the bottom hang in the air and the anchor bolts bear all of the cabinet weight, as shown in **Figure 3-14**.

Figure 3-14 Castors adjustment

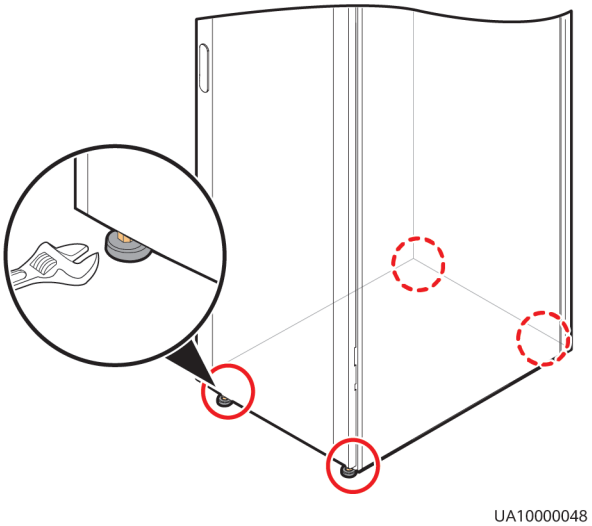

Step 2 Check the cabinet levelness using a level. If the cabinet is not level, wrench the anchor bolts.

----End

3.2.2 Installing Batteries

DANGER

- Before installing batteries, read through the battery safety precautions and install batteries as instructed in the delivered battery installation guide.
- Install the batteries from the lower layer to the upper layer to ensure the system is secure and balanced.

Install a battery rack and batteries. For details, see the battery installation guide delivered along with the batteries.

3.2.3 Installing Optional Components

3.2.3.1 Installing Antiseismic Kits

Procedure

Step 1 Determine the installation positions for the antiseismic kits based on the delivered marking-off template, and mark mounting holes.

Figure 3-15 Antiseismic kit mounting hole positions

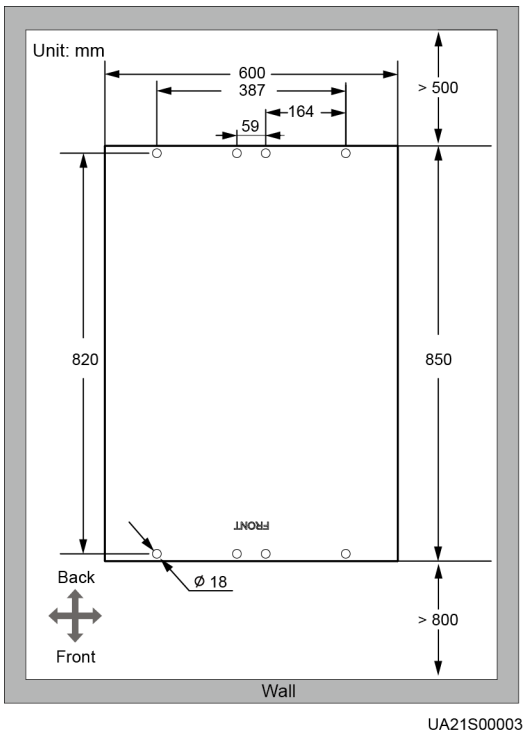

Step 2 Secure two antiseismic kits to the front and rear of the cabinet using twelve M5x16 screws and four M12 screws.

Figure 3-16 Securing the antiseismic kits to the cabinet

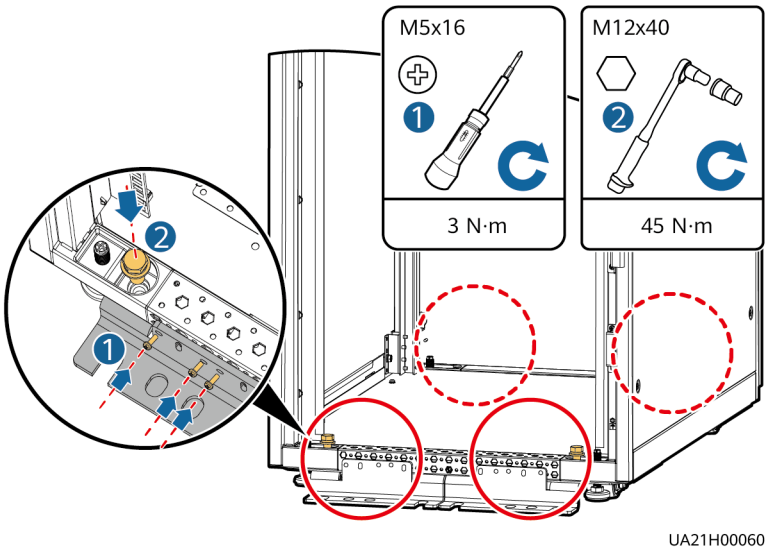

Step 3 Reinstall the rear panel.

Step 4 Adjust the cabinet position so that the expansion bolt holes are aligned with the eight holes at the bottom of the cabinet.

Step 5 Secure the two antiseismic kits at the front and rear of the cabinet to the floor using eight M12 expansion bolts, as shown in **Figure 3-17**.

Figure 3-17 Securing the antiseismic kits to the floor

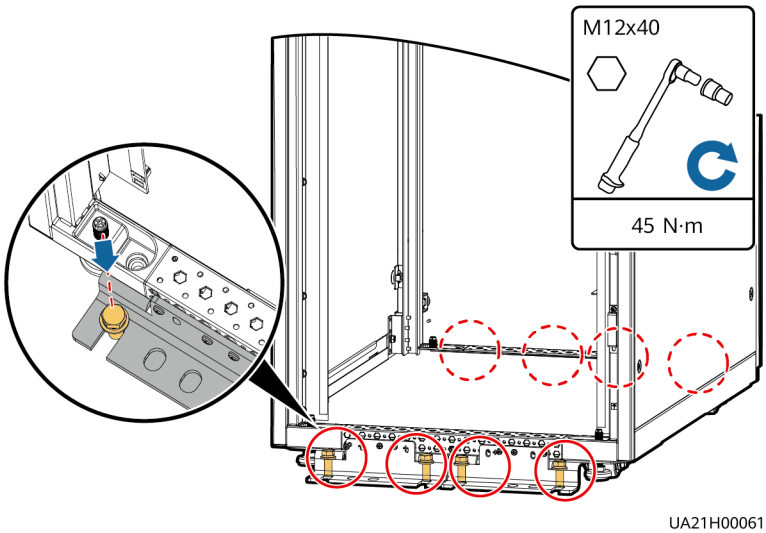

----End

3.2.3.2 Connecting an Ambient T/H Sensor

Procedure

Step 1 Connect the RJ11 port on the ambient T/H sensor to the COM1 port on the monitoring interface card.

Figure 3-18 Connecting a UPS and an ambient T/H sensor

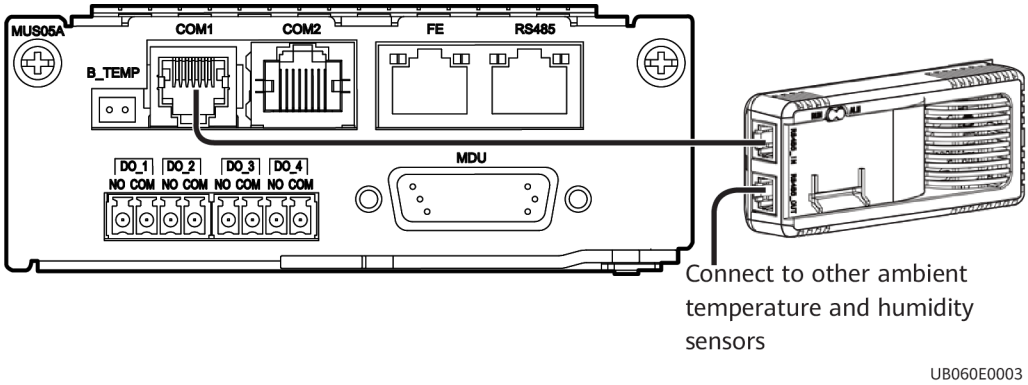

NOTE

The ambient T/H sensor can be used as a battery temperature sensor.

----End

3.2.3.3 Connecting the iBAT

Procedure

Step 1 Connect the COM_OUT port on the CIM of the iBAT to the COM2 port on the monitoring interface card.

Figure 3-19 COM2 port

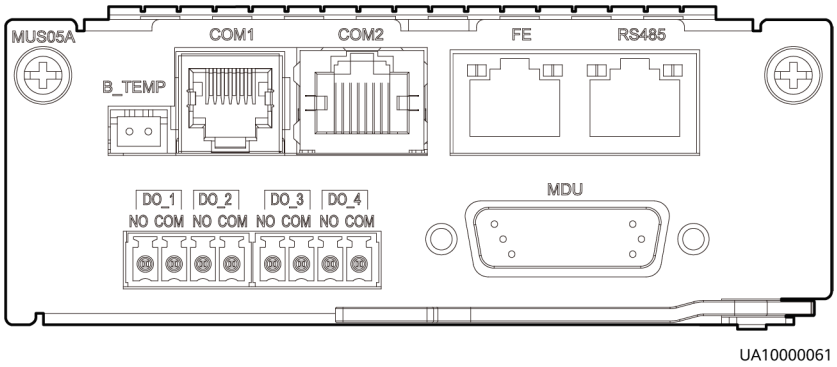

----End

3.2.3.4 Installing a Battery Grounding Failure Detector

Procedure

Step 1 Install a battery grounding failure detector. For the installation method, see *UPS Battery Grounding Failure Detector User Manual*.

Figure 3-20 Position of a battery grounding failure detector

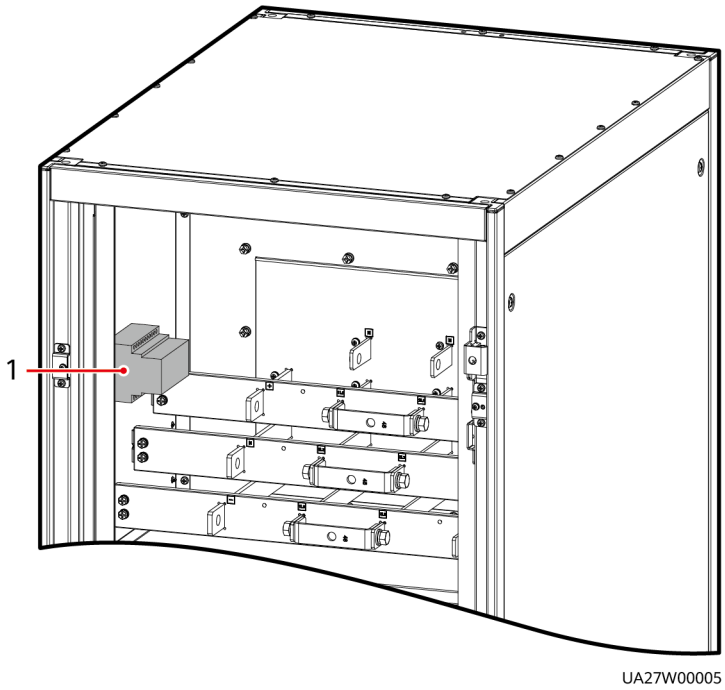

(1) Battery grounding failure detector

----End

3.2.4 UPS Cable Connection Reference

Context

WARNING

- Keep away from cabinets when preparing cables to prevent cable scraps from entering the cabinets. Cable scraps may cause ignition during power-on and result in personal injury and device damage.
- After installing cables, clean the cabinet top, bottom, copper bar wiring positions, and other positions. Ensure that there is no dust or scraps inside and around cabinets.
- Prepare terminals onsite. The length of the copper wire should be the same as that of the part of the terminal that covers the conductor.

Procedure

Step 1 Route a cable into the cabinet and bind it to a nearby beam.

Step 2 Pull the cable to the copper bar to which the cable is to be connected, determine the cable length, and mark the cable at the position where the cable is to be cut.

Step 3 Pull the marked cable out of the cabinet, cut the cable from the marked position, strip the cable, and crimp a terminal.

 Copyright © Huawei Technologies Co., Ltd.

Figure 3-21 Preparing a cable terminal outside the cabinet

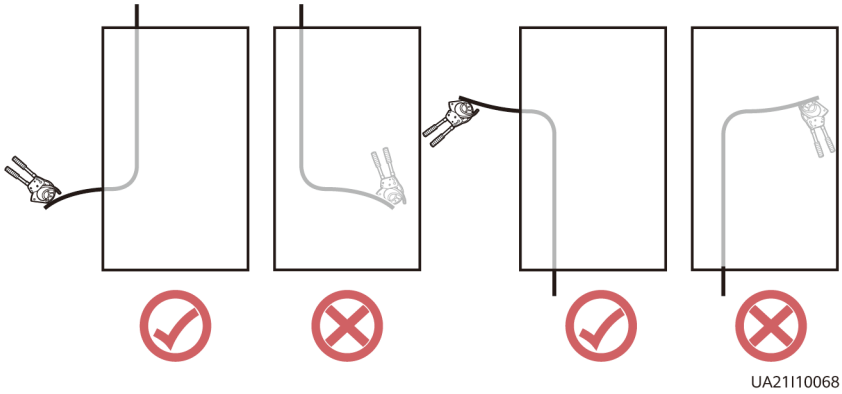

NOTE

Choose an appropriate cabling route based on the actual situation. The figure is for reference only.

Step 4 Connect the cable with a crimped terminal to the corresponding copper bar.

Step 5 Clean foreign matter inside the cabinet.

----End

3.2.5 Routing Cables

3.2.5.1 Routing Cables from the Top

Context

NOTICE

- Before connecting cables, ensure that the switches inside the UPS, the upstream input switch and battery string switch are OFF to prevent operations with power on.
- Route cables for the UPS from inside out and from bottom up.

Procedure

Step 1 Ensure the maintenance bypass switch is OFF. Open the front door, remove the front cover, and remove covers from the top of the cabinet based on the site requirements.

Figure 3-22 Removing the cover

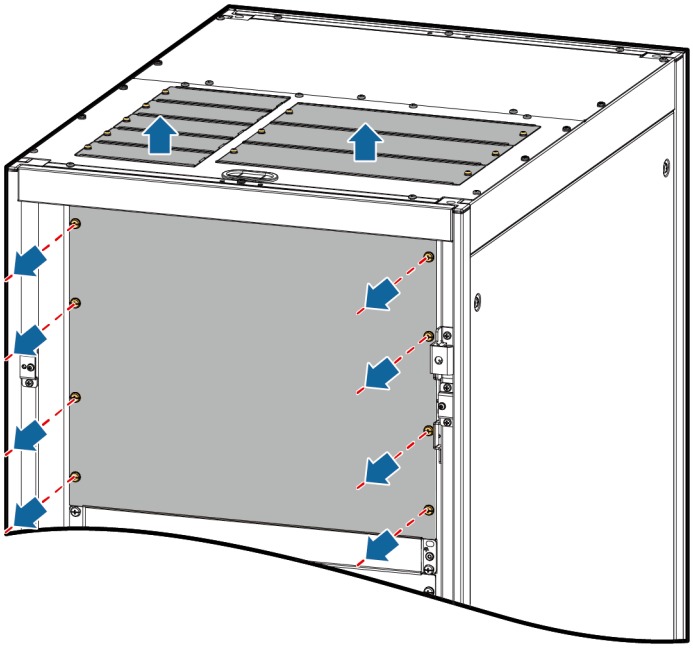

UA07H00026

Figure 3-23 Copper bar positions

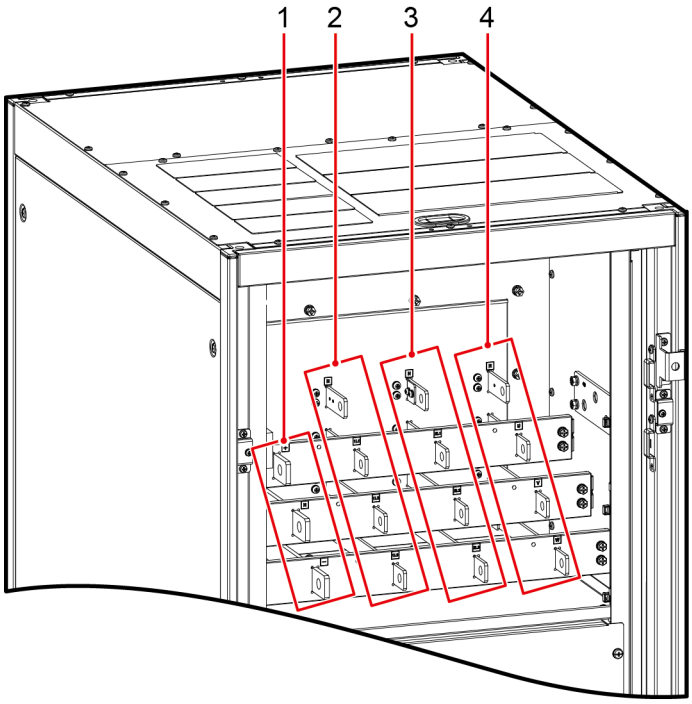

UA27W00006

(1) Battery input terminals (+, N, –)

(2) Mains input terminals (1L1–1L3, N)

(3) Bypass input terminals (2L1–2L3, N)

(4) Output terminals (U, V, W, N)

Step 2 Connect ground cable.

Figure 3-24 Grounding

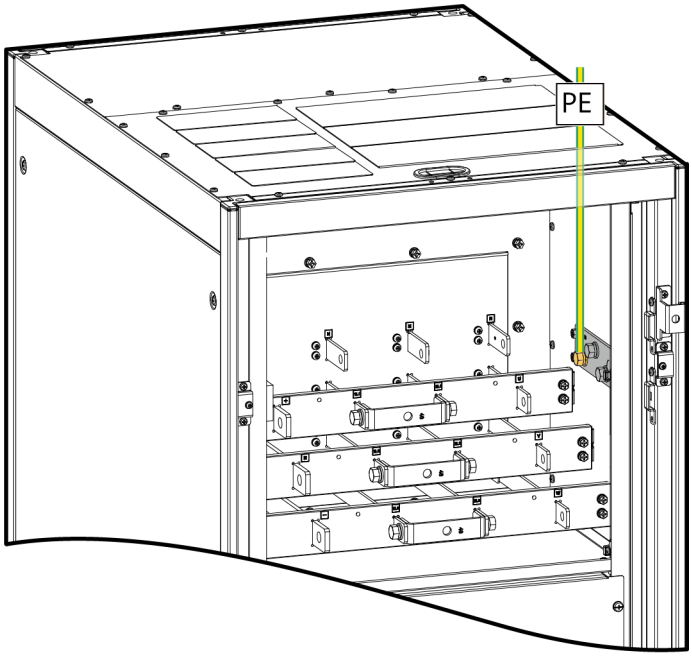

UA27I50001

Step 3 Route power cables.

- Dual mains

  Remove the copper bar between mains and bypass input terminals.

Figure 3-25 Removing copper bars

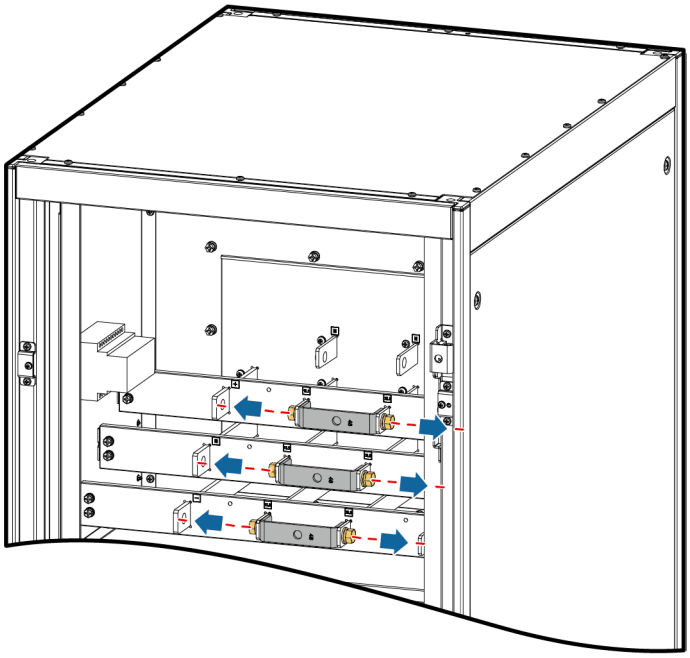

UA27H00004

Figure 3-26 Connecting power cables

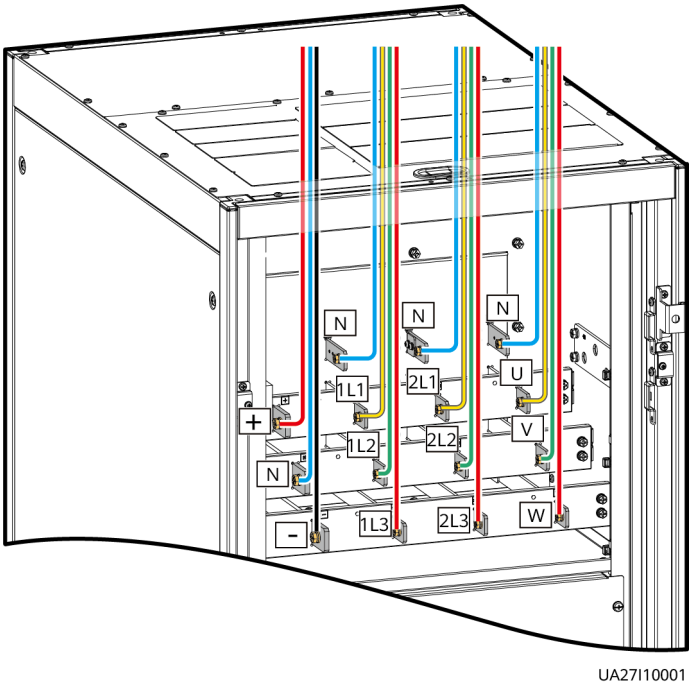

Route a neutral wire from the middle of the positive and negative battery strings.

The following figure uses a battery string consisting of 40 batteries as an example. The battery neutral wire is routed from the middle of positive and negative battery strings, each consisting of 20 batteries.

Figure 3-27 Neutral wire

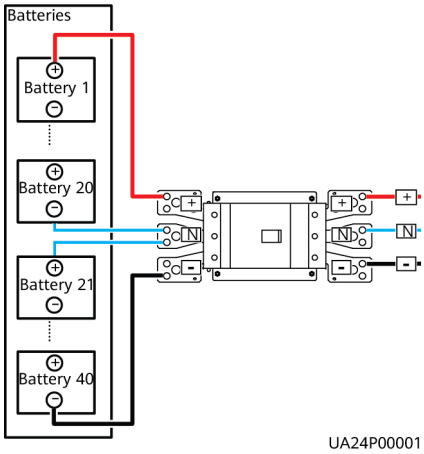

- Single mains

  For single mains, the copper bar between the mains and bypass input terminals do not need to be removed, and bypass input cables do not need to be connected.

Step 4 Route signal cables. Bind cables to the cabinet.

Figure 3-28 Connecting signal cables

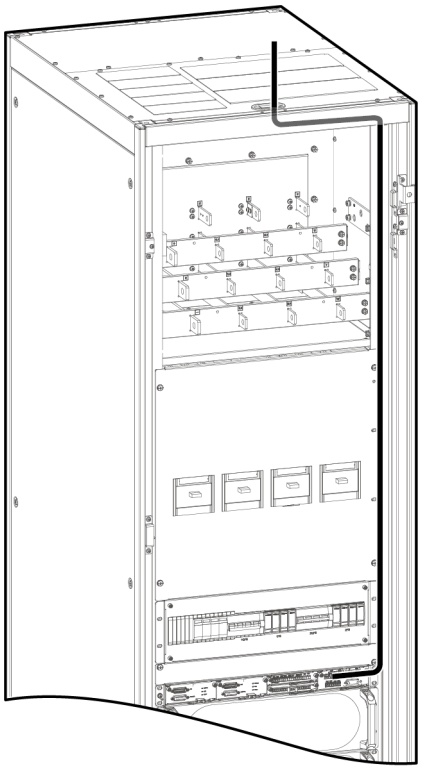

NOTE

The number and colors of signal cables are for reference only.

----End

3.2.5.2 Routing Cables from the Bottom

Prerequisites

A cable entry cabinet is installed.

Context

NOTICE

Route cables for the UPS from inside out.

Procedure

Step 1 (Optional) Determine the installation position for the cable entry cabinet, and draw mounting holes in the installation position based on drawings.

Figure 3-29 Mounting holes for the cable entry cabinet (unit: mm)

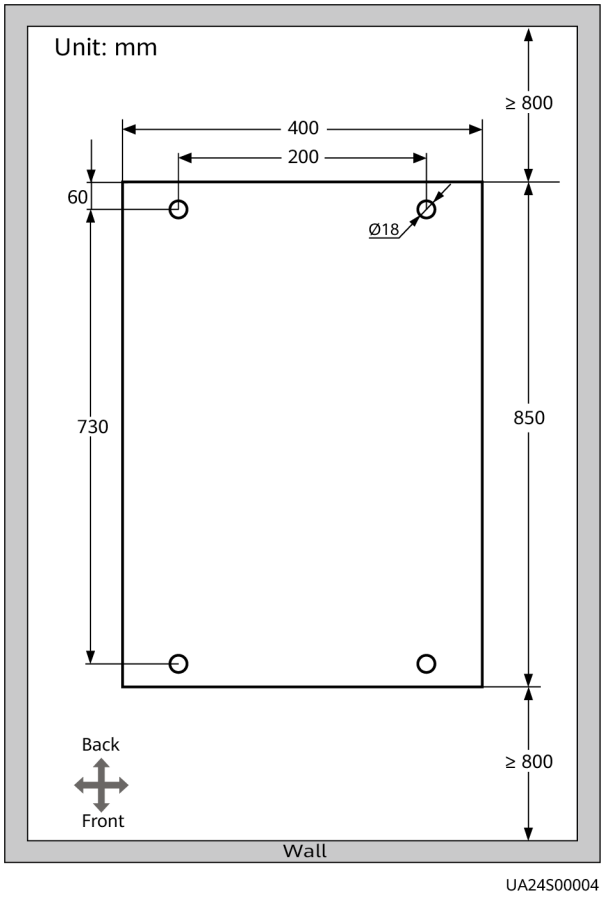

NOTE

This section describes how to install the cable entry cabinet on the right side of the UPS. If the cable entry cabinet needs to be installed on the left side of the UPS, remove the side panel of the cable entry cabinet and the cable trough, and install them on the right side of the cable entry cabinet. **Figure 3-30** shows the positions of the side panel of the cable entry cabinet and the cable trough.

Step 2 Remove the right and rear covers from the UPS cabinet, and remove the front and rear covers from the cable entry cabinet. Put away the removed screws and covers.

Step 3 Adjust the anchor bolts of the cable entry cabinet to make it flush with the UPS cabinet.

Step 4 Install equipotential plate mounting kits on the same horizontal plane of the UPS cabinet and cable entry cabinet.

 Copyright © Huawei Technologies Co., Ltd.

Figure 3-30 Installing equipotential plate mounting kits

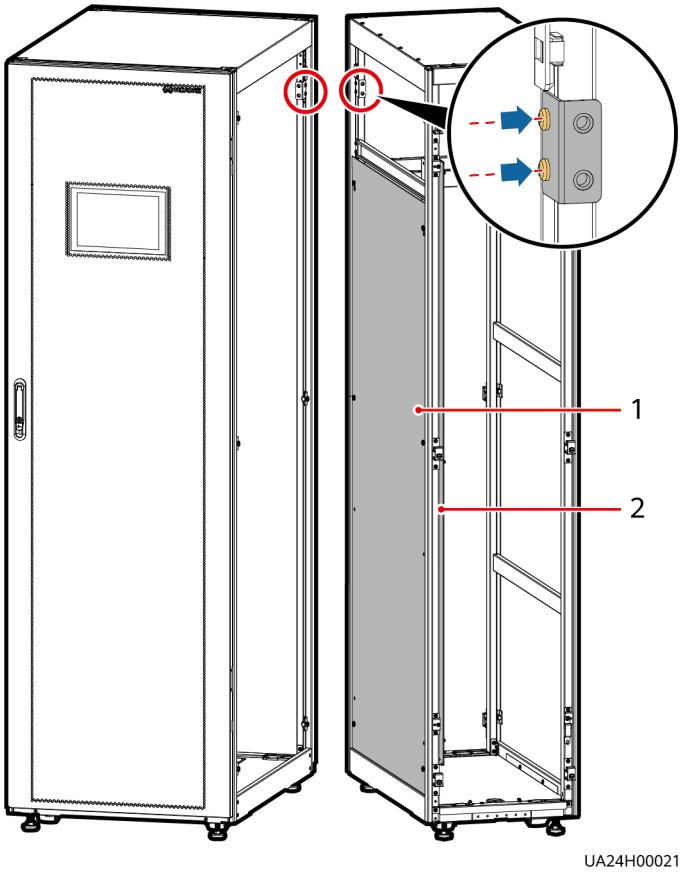

(1) Side panel (2) Cable trough

Step 5 Place the cable entry cabinet on the right of the UPS cabinet.

Step 6 Install the front and rear connecting kits.

Figure 3-31 Installing connecting kits

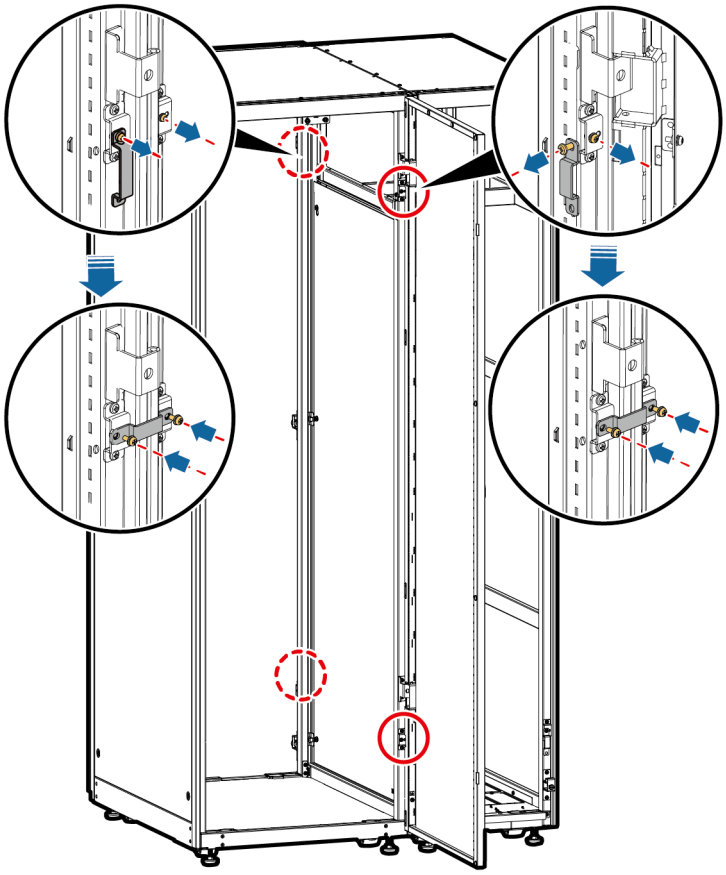

Step 7 (Optional) Secure the cable entry cabinet to the ground.

NOTE

For details about how to secure the cable entry cabinet, see **Secured Installation** in **3.2.1 Installing the Cabinet**.

Step 8 Install an equipotential plate.

Figure 3-32 Equipotential plate

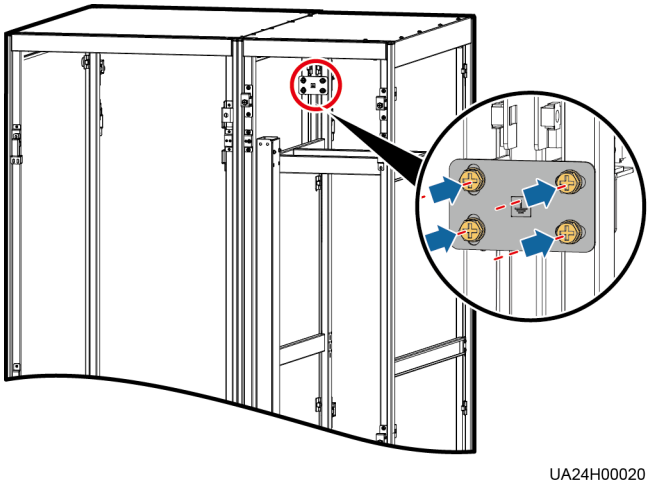

Step 9 Remove covers from the top of the cable entry cabinet based on the site requirements.

Figure 3-33 Removing the cover

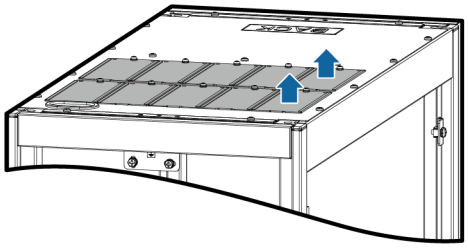

Step 10 Determine the cabling mode.

- Remove small covers for routing cables.

  Remove a certain number of small covers from the bottom of the cable entry cabinet based on the actual cable conditions.

  Figure 3-34 Removing small covers

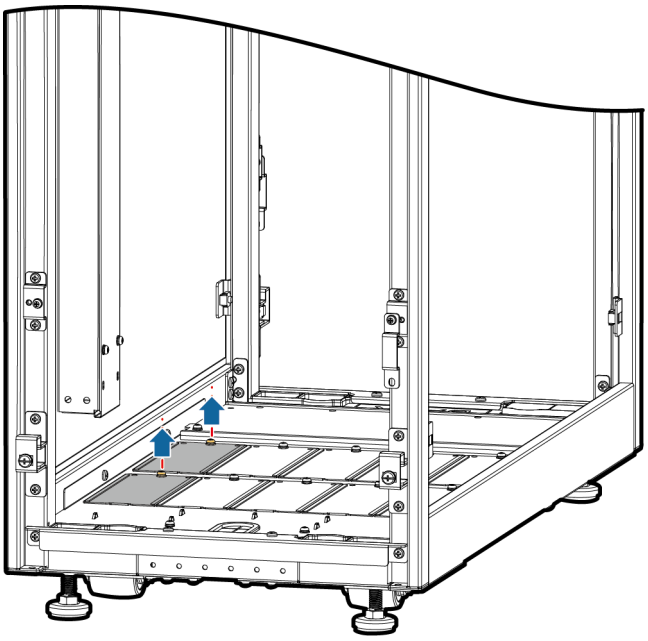

- Drill holes in the large cover for routing cables.
  a. Remove all small covers from the bottom of the cable entry cabinet.
  b. Remove the two large covers from the bottom of the cable entry cabinet, drill holes in them based on site requirements, and install them on the positions where the small covers were placed.

 Copyright © Huawei Technologies Co., Ltd.

Figure 3-35 Removing large covers

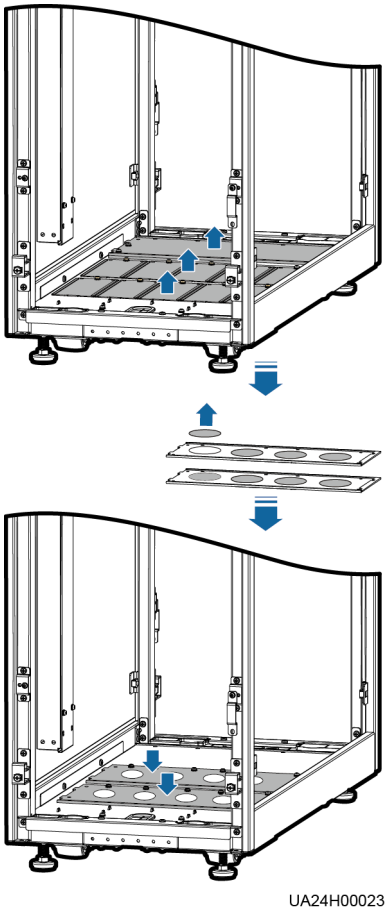

NOTE

- The quantity of holes in the above figure is for reference only.
- If holes are drilled for routing cables, attach grommet strips on the hole edges to protect cables.

Step 11 Connect ground cables and power cables.

NOTE

For the screw specifications and torque used for connecting cables in a bottom cable routing scenario, refer to the top cable routing scenario. This section only shows the cable routes in the bottom cable routing scenario.

 Copyright © Huawei Technologies Co., Ltd.

Figure 3-36 Connecting cables

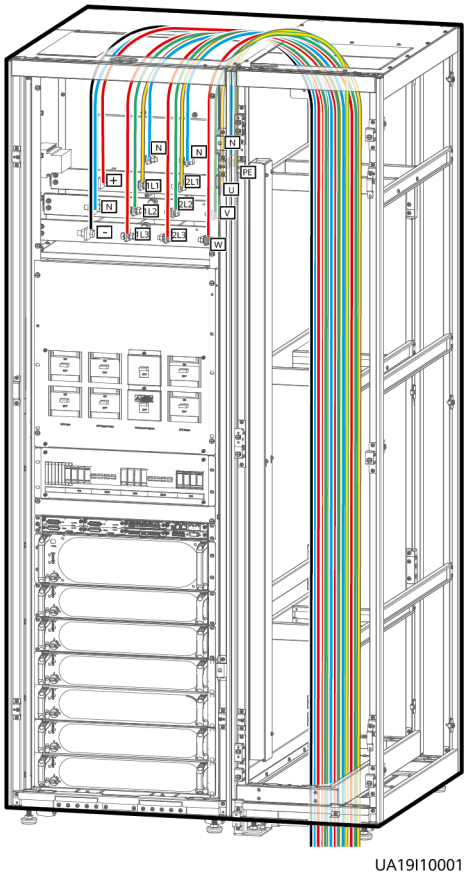

Step 12 Remove the signal cable trough cover from the cable entry cabinet.

Figure 3-37 Removing the cable trough cover

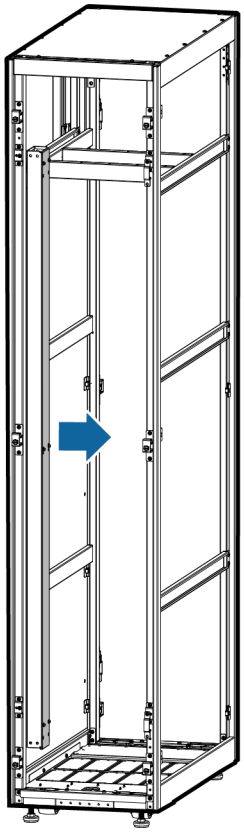

UA24H00025

Step 13 Connect the signal cable. (Route the signal cable out of the UPS cabinet through the cable hole on the top, and then into the cable entry cabinet through the cable hole on the top of that cabinet.)

 Copyright © Huawei Technologies Co., Ltd.

Figure 3-38 Signal cable

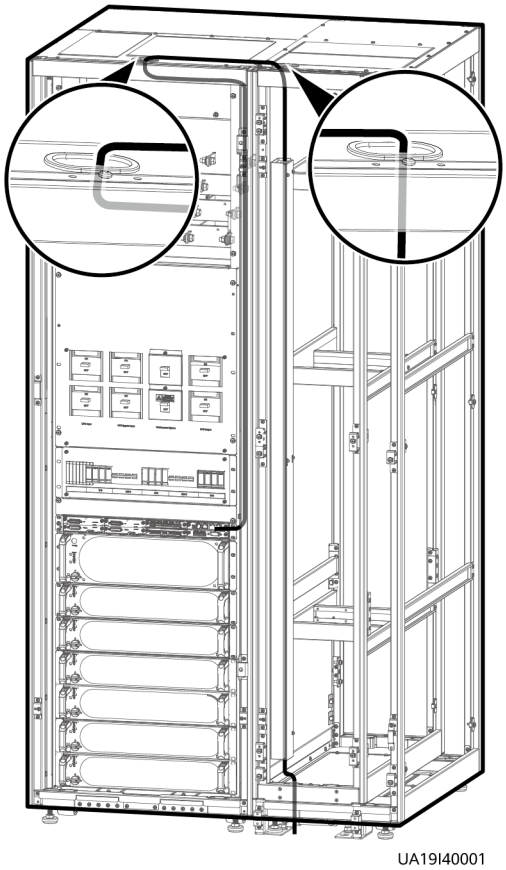

NOTE

The number and colors of signal cables are for reference only.

Step 14 Install the right cover of the UPS cabinet on the right of the cable entry cabinet, and install other covers in the original positions.

----End

3.2.6 Remote EPO

NOTICE

- Huawei does not provide the EPO switch or cable. If the cable is required, the recommended cable is 22 AWG.
- Equip the EPO switch with a protective cover to prevent misoperations, and cover the cable with protective tubing.
- Triggering EPO will shut down the rectifier, inverter, charger, and static bypass, but does not disconnect the UPS mains input. To power off the UPS completely, open the front-end input switch when triggering EPO.

Connect the requisite EPO switch to UPS dry contacts.

- **Figure 3-39** shows the cable connections for an NC EPO switch.

- **Figure 3-40** shows the cable connections for an NO EPO switch.

Figure 3-39 Cable connection for an NC EPO switch

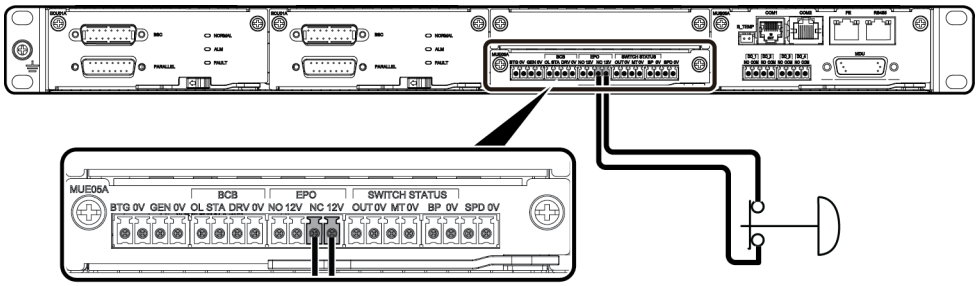

UA10000063

Figure 3-40 Cable connection for an NO EPO switch

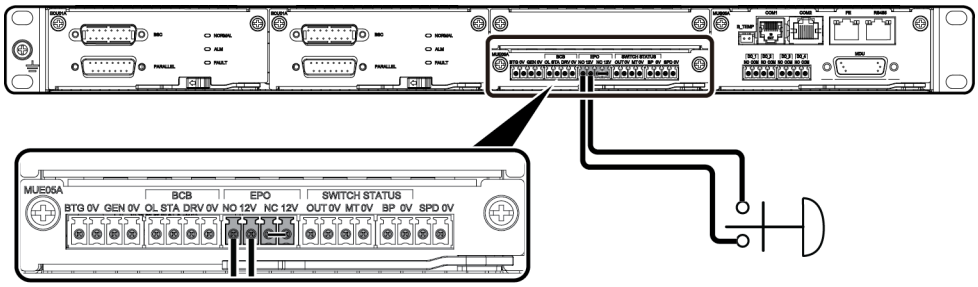

UA10000062

NOTE

- When the EPO switch is in the NC state, remove the jumper between EPO_NC and EPO_12V before connection. When the EPO switch is turned off, EPO is triggered.
- When the EPO switch is in the NO state, ensure that the jumper is connected between EPO_NC and EPO_12V. When the EPO switch is turned on, EPO is triggered.

3.2.7 Connecting Communications Cables

Procedure

Step 1 Connect the external network management device to the RS485 port of the monitoring interface card.

Step 2 Connect the network port on a PC to the FE port of the monitoring interface card.

----End

3.3 Installing a Parallel System

3.3.1 Installing the UPSs

Context

NOTICE

When installing multiple cabinets, install connecting kits to combine and secure the cabinets.

Procedure

Step 1 Install the UPSs in a parallel system using the single UPS installation method.

Step 2 Unscrew the connecting kit and put it through the reserved holes to connect the two UPSs and then tighten the screws on the kit, as shown in **Figure 3-41**.

Figure 3-41 Connecting parallel plates

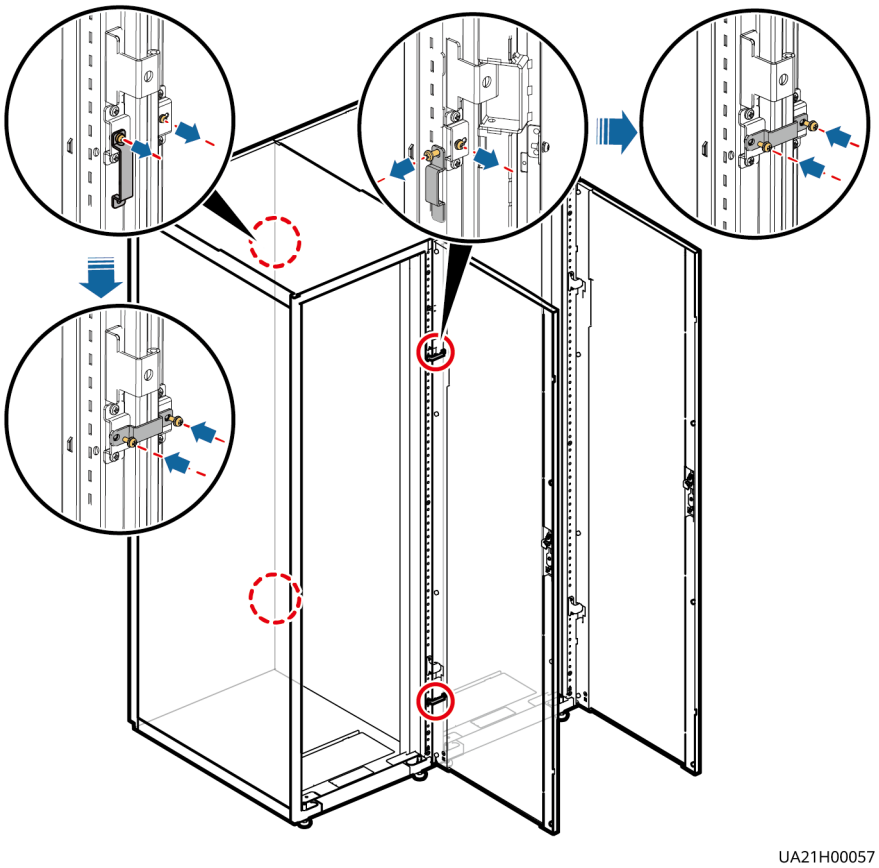

NOTE

You also need to connect parallel plates at the rear of the UPS.

----End

3.3.2 Connecting Power Cables

Procedure

Step 1 Based on the site configurations, select a parallel connection method to connect cables for the parallel system. **Figure 3-42** shows a typical conceptual diagram for a 1+1 parallel system, and **Figure 3-43** shows the cable connections for this system.

Figure 3-42 Conceptual diagram of a 1+1 parallel system

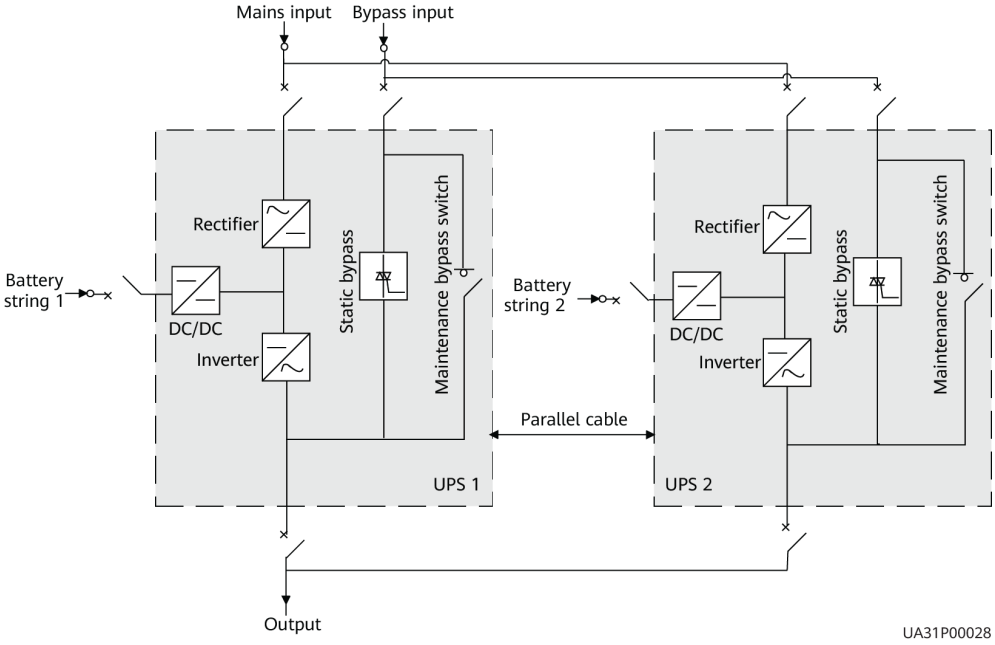

Figure 3-43 Cable connections for a 1+1 parallel system

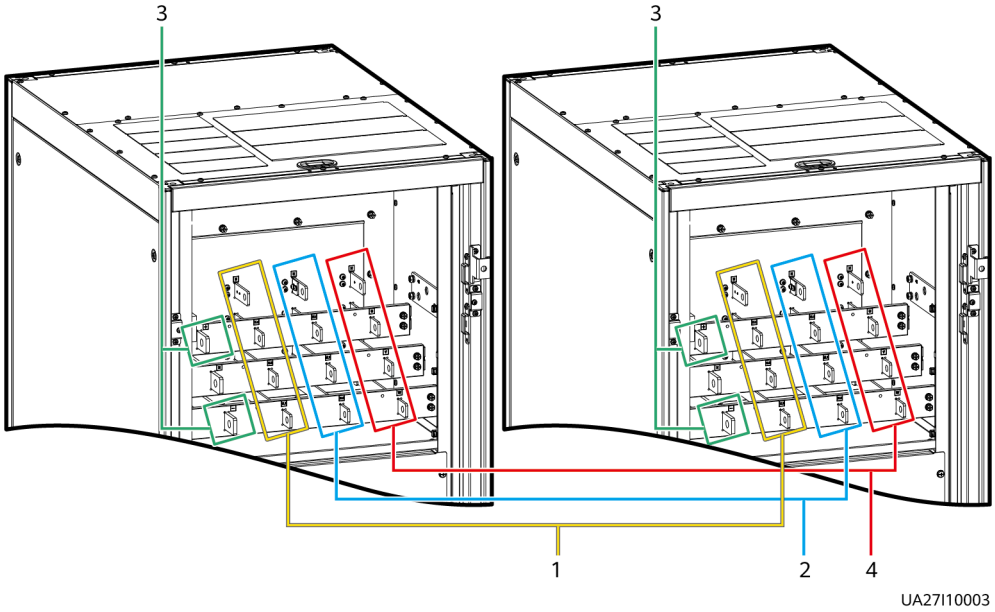

(1) Mains input power cables (2) Bypass input power cables (3) Battery cables (4) Output power cables

Figure 3-44 shows a typical conceptual diagram for a dual-bus system consisting of two UPS systems, and **Figure 3-45** shows the cable connections for this system.

Figure 3-44 Conceptual diagram of a dual-bus system

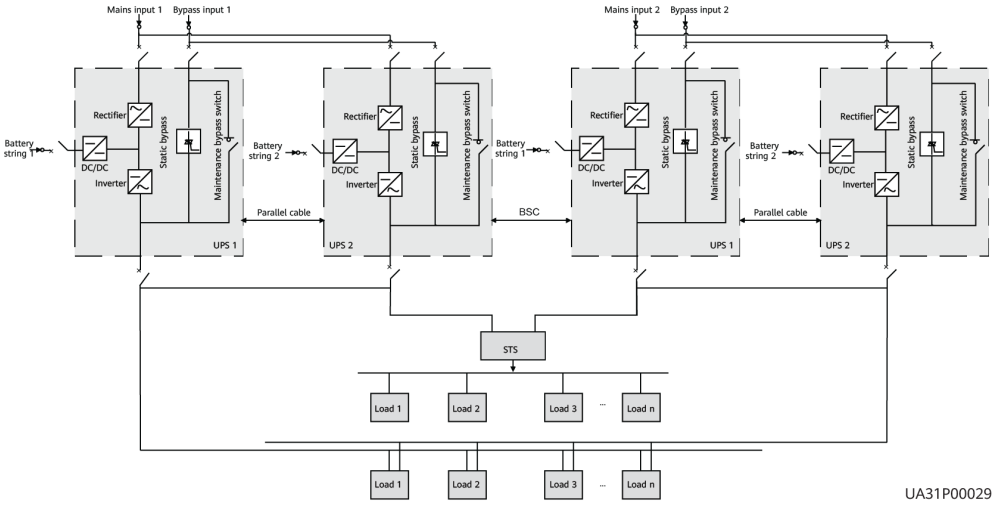

Figure 3-45 Cable connections for a dual-bus system

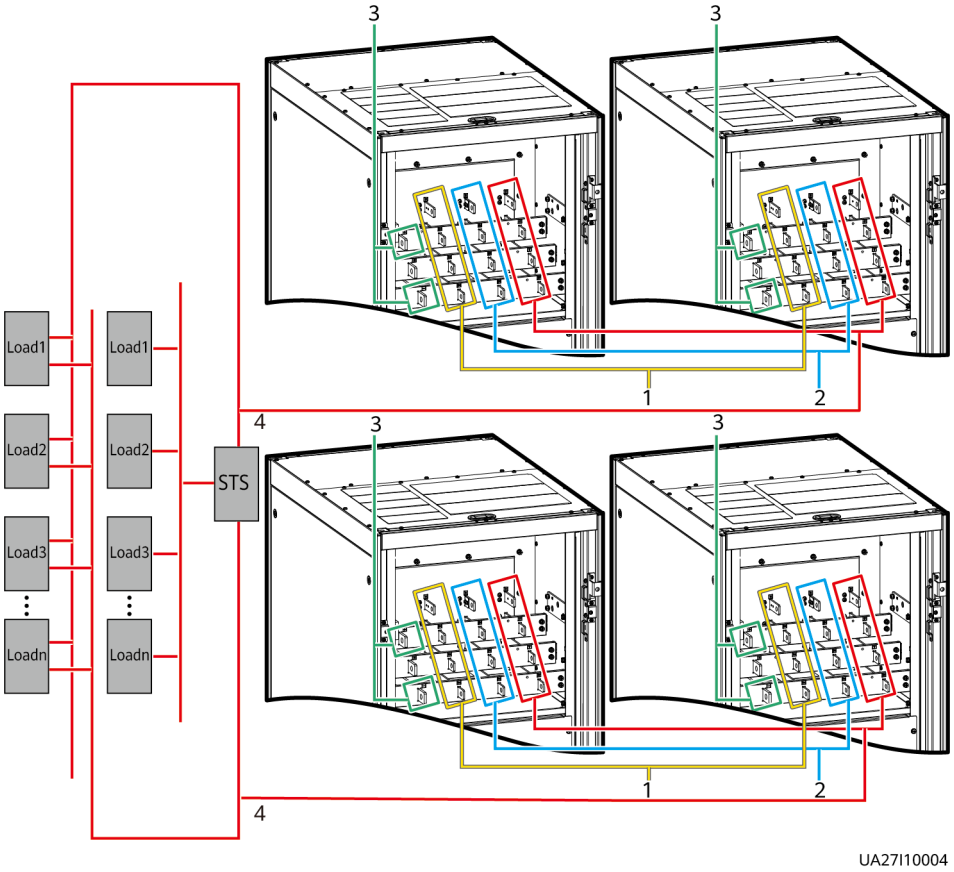

(1) Mains input power cables (2) Bypass input power cables (3) Battery cables (4) Output power cables

----End

3.3.3 Connecting Signal Cables

Context

This topic describes how to connect signal cables as a loop for four UPSs in a parallel system.

Procedure

Step 1 Connect the parallel ports on the UPSs using parallel cables to form a loop.

- **Figure 3-46** shows the topology diagram for the N+X parallel system and **Figure 3-47** shows the cable connections for this system.

Figure 3-46 Topology diagram of an N+X parallel system

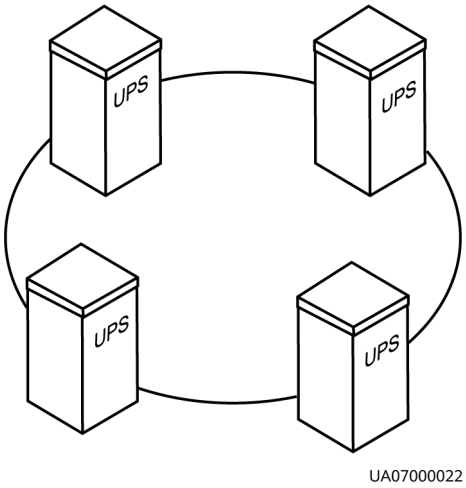

Figure 3-47 Connecting signal cables in a parallel system consisting of the N +X parallel system

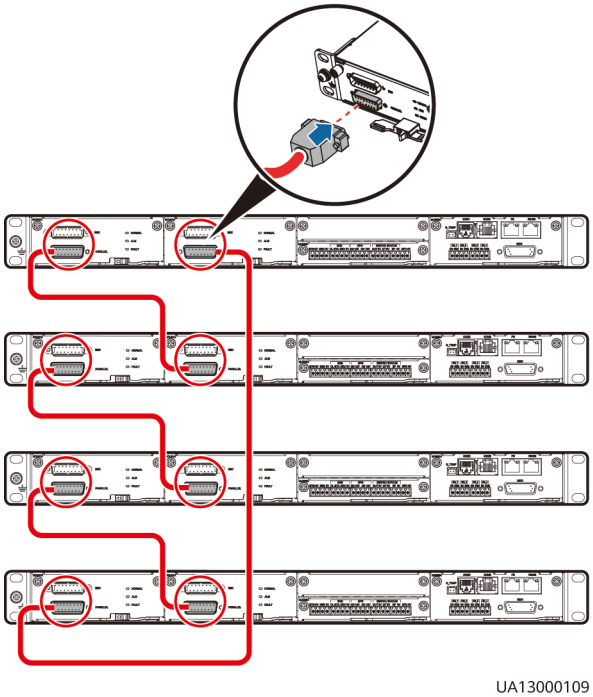

- In a dual-bus system, you need to connect cables to BSC ports on the UPSs. **Figure 3-48** shows the cable connections for a dual-bus system containing two master systems.

Figure 3-48 Connecting signal cables in a dual-bus system

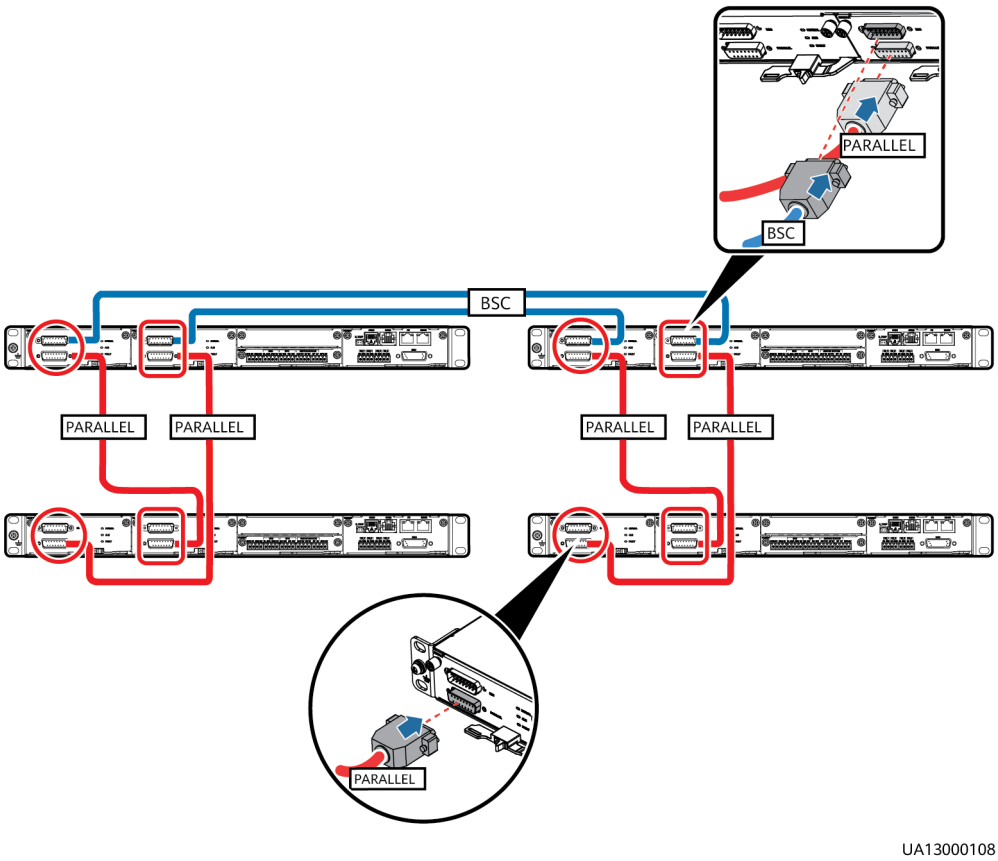

Step 2 Connecting the signal cables to each single UPS in a parallel system.

----End

3.4 Installation Verification

Table 3-5 lists check items.

NOTICE

If the check results of listed items 8 and 9 in **Table 3-5** do not meet the acceptance criteria, the UPS may be damaged.

Table 3-5 Installation checklist

No.	Item	Acceptance Criteria
01	UPS installation	The UPS is securely installed and does not tilt due to vibration.

No.	Item	Acceptance Criteria
02	Neat arrangement	The UPS and its adjacent cabinets are neatly arranged and secured with connecting plates.
03	Cable layout	Cables are routed properly and cable routing meets customer requirements.
04	Cable labels	Both ends of a cable are labeled. Labels are concise and easy to understand.
05	Cable ties	Distances between cable ties are the same, and no burr exists.
06	Cable connections	The input, output, and battery cables are securely connected. For the cables secured by screws, the washers are flattened.
07	Grounding	The resistance between the UPS ground bar and the equipment room ground bar is less than 0.1 ohm.
08	AC phase sequence	For a single UPS, the mains input, bypass input, and output phase sequences are correct. For a parallel system, the phase sequences of each UPS must be consistent.
09	Battery cables	The battery strings are correctly connected to the UPS.
10	Operating environment	The inside and outside of the cabinet, and other operating components, are free from conductive dust and foreign matter. 1. Ensure that there is no foreign matter (such as copper wires and screws) on the top of the cabinet. 2. Ensure that there is no foreign matter at the copper bar terminals. 3. Ensure that there is no foreign matter on the switches, in the switch terminal groove, and between copper bars above the switches. 4. Ensure that there is no foreign matter on the bottom plate of the cabinet. 5. Ensure that there is no foreign matter on the rear module subrack.

 Copyright © Huawei Technologies Co., Ltd.

NOTE

1. In the scenarios where holes are drilled for routing cables or covers are removed for routing cables, after routing cables and checking cable connections, use sealing putty to fill in the gap between the cables and the cabinet.
2. After verifying the installation, reinstall all the covers.
3. Do not remove the dustproof cover before power-on to prevent dust inside the UPS, as shown in **Figure 3-51**.

Figure 3-49 Positions to be checked for foreign matter

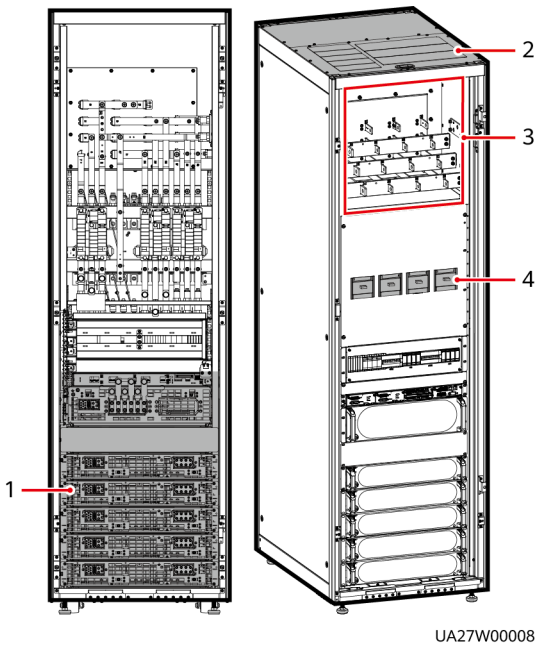

(1) Rear of modules (2) Cabinet top (3) Wiring terminal blocks (4) Switches

Figure 3-50 Fill the holes with sealing putty

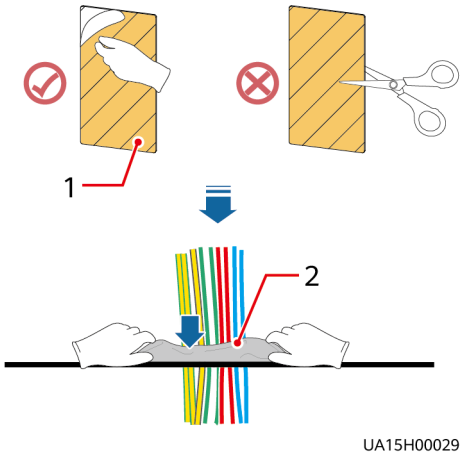

(1) Paper protective film (2) Sealing putty

Figure 3-51 Dustproof cover

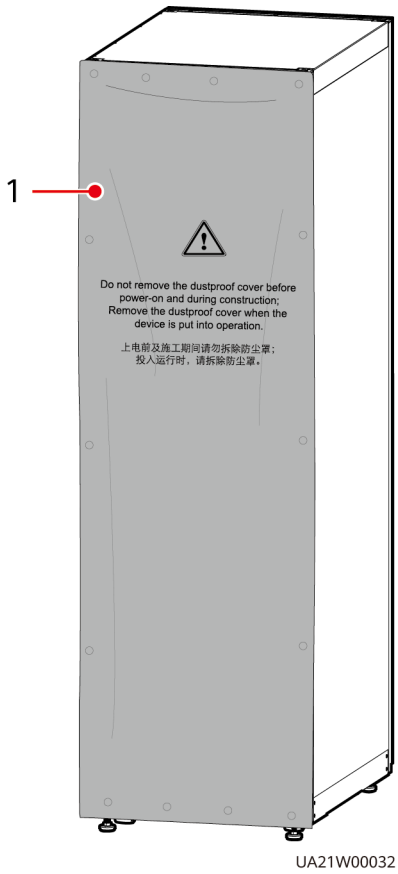

(1) Dustproof cover

4 User Interface

4.1 LCD Interface

4.1.1 Main Menu

NOTICE

User interfaces displayed in this document correspond to the MDU version V100R003C01SPC597 and are for reference only.

The LCD screen is divided into three parts: status bar, alarm bar and information area. **Figure 4-1** numerically labels functions of the default main screen, and **Table 4-1** describes these functions.

Figure 4-1 Main Menu screen

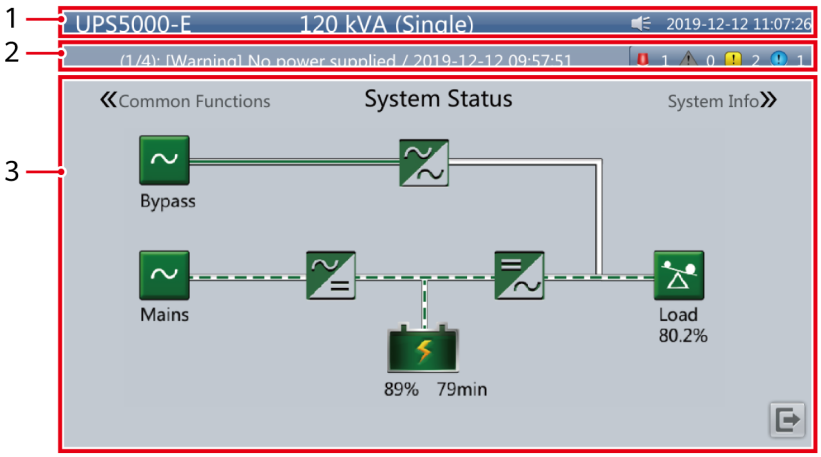

Copyright © Huawei Technologies Co., Ltd.

Table 4-1 Main screen description

Number	Area	Function
1	Status bar	Displays the UPS model, capacity, configuration, current date and time, USB flash drive status, and buzzer status.
2	Alarm bar	Displays active alarms in a scrolling list and the number of active alarms based on severity. Tap the alarm icon area to open the active alarm page.
3	Information area	Displays the power flow as well as key information such as load and battery information. Tap the **Bypass**, **Mains**, **Battery**, and **Load** icons to view details.

Table 4-2 describes the functions of common buttons.

Table 4-2 Functions of common buttons

Button	Function
	Returns to the main screen.
	Scrolls the page down.
	Scrolls the page up.
	Returns to the upper-level menu.
	Logs a user out.

4.1.2 System Info Screen

On the main screen, tap **System Info**. The **System Info** screen is displayed.

 Copyright © Huawei Technologies Co., Ltd.

Figure 4-2 System Info Screen

4.1.2.1 Module Data Screen

On the **System Info**, tap the UPS picture. On the **Module Data** screen, select a module to view its running data. « indicates the selected module, as shown in **Figure 4-3**.

Figure 4-3 Module Data screen

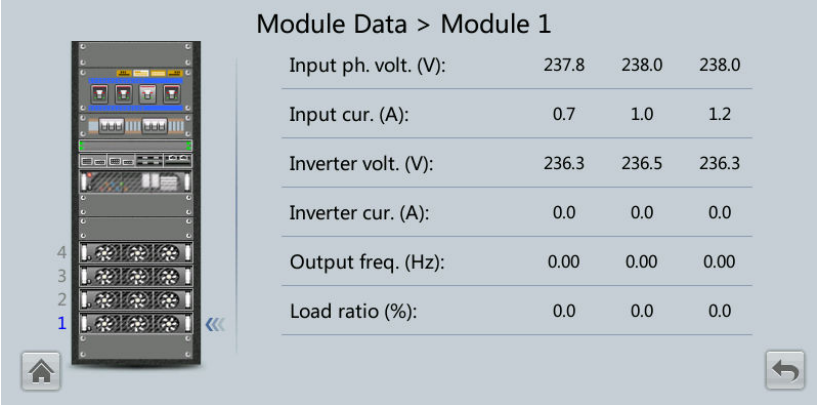

4.1.2.2 Running

On the **System Info** screen, tap to access the **Runn Info** screen.

Figure 4-4 Running 1

Figure 4-5 Running 2

NOTE

- If the battery type is lead-acid battery and **Number of iBOXs** in **System Info** > **Settings** > **iBOX Settings** > **Basic Param.** is not **0**, **Battery System** is displayed on the **Runn Info** screen.
- If **Current equalization detection** in **Monitoring** > **UPS System** > **Running Parameter** > **Output Setting** on the WebUI is set to **Enable**, and the number of inverter modules is greater than or equal to 2, **Mod. Cur. Eql. Data** is displayed on the **Runn. Info.** screen.

Table 4-3 AC output

Item	Description
Phase voltage (V)	AC output phase voltage
Line voltage (V)	AC output line voltage
Phase current (A)	AC output phase current
Frequency (Hz)	AC output frequency
Power factor	Proportion of output active power to output apparent power.

Table 4-4 UPS load

Item	Description
Crest factor	Proportion of the peak value of load current to the valid value.
Load ratio (%)	Load ratio of each phase on the UPS, that is, proportion of actual power to rated power.
Active power (kW)	Output active power of each phase on the UPS.
Apparent power (kVA)	Output apparent power of each phase on the UPS.

 Copyright © Huawei Technologies Co., Ltd.

Item	Description
Reactive power (kvar)	Output reactive power of each phase on the UPS, that is, square root of the difference between the square of output apparent power and the square of output active power.
Hist. Max. Load Ratio (%)	Historical maximum load ratio of each phase on the UPS.
Hist. Max. Active Power (kW)	Historical maximum active power of each phase on the UPS.
Hist. Max. Apparent Power (kVA)	Historical maximum apparent power of each phase on the UPS.

Table 4-5 Mains input

Item	Description
Phase voltage (V)	Mains input phase voltage
Line voltage (V)	Mains input line voltage
Phase current (A)	Mains input phase current
Frequency (Hz)	Mains input frequency
Power factor	Proportion of the mains input active power to the mains input apparent power.

Table 4-6 Bypass input

Item	Description
Phase voltage (V)	Bypass input phase voltage
Line voltage (V)	Bypass input line voltage
Phase current (A)	Bypass input phase current
Frequency (Hz)	Bypass input frequency
Power factor	Proportion of the bypass input active power to the bypass input apparent power.

 Copyright © Huawei Technologies Co., Ltd.

Table 4-7 Battery status

Item	Description
Battery Status	Lead-acid battery: The value can be Not connected, Equalized charging, Float charging, Hibernating, discharging, or Not chg. or dis. Lithium battery: The value can be Not connected, Float charging, discharging, or Not chg. or dis.
Voltage (V)	Voltage of the battery string.
Current (A)	Current of the battery string (the current is **+** when batteries are being charged and **–** when discharged).
Temperature (°C) (only for lead-acid batteries)	Battery operating temperature (A battery sensor is required. If the sensor is not installed, **N/A** is displayed).
Backup time (min)	Battery backup time estimated at the current load.
Remaining cap. (%)	Remaining battery capacity.
SOH	State of health.
Maximum Cell Temperature (°C) (only for lithium batteries)	-
Min Cell Temperature (°C) (only for lithium batteries)	-

Table 4-8 Total runtime

Item	Description
Bypass runtime (h)	Time for which the UPS runs in bypass mode.
Inv. runtime (h)	Time for which the UPS runs in inverter mode.

NOTE

The value must be an integer. For example:

- If the value is less than 1, the value takes 0.
- If the value is greater than or equal to 1 and less than 2, the value takes 1.

 Copyright © Huawei Technologies Co., Ltd.

Table 4-9 Environment data

Item	Description
Ambient temperature (°C)	Temperature measured by the ambient temperature and humidity sensor. (An ambient temperature and humidity sensor is required. If no sensor is connected, the ambient temperature sampled by the bypass module is displayed.)
Ambient humid. (%RH)	Humidity measured by the ambient temperature and humidity sensor. If the sensor is not installed, **N/A** is displayed.

- Module Data: reflects each data of a module.
- Battery System - Battery String Summary: reflects the voltage, current, SOC, and SOH data of each battery string.
- Battery System - Battery String N: reflects the temperature, voltage, internal resistance, current, SOC, and SOH data of a single battery in the battery string.

4.1.2.3 Alarms Screen

Tap on the **System Info** screen to enter the **Alarms** screen.

Figure 4-6 Alarms Screen

Active alarms

This screen displays alarm information including the severity, name, ID, location, and generation time.

Figure 4-7 Active alarms

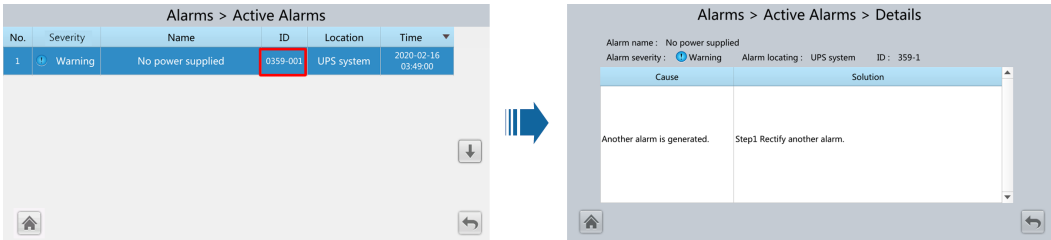

Historical alarms

This screen displays alarm information including the severity, name, ID, location, generation time, and clear time.

Figure 4-8 Historical alarms

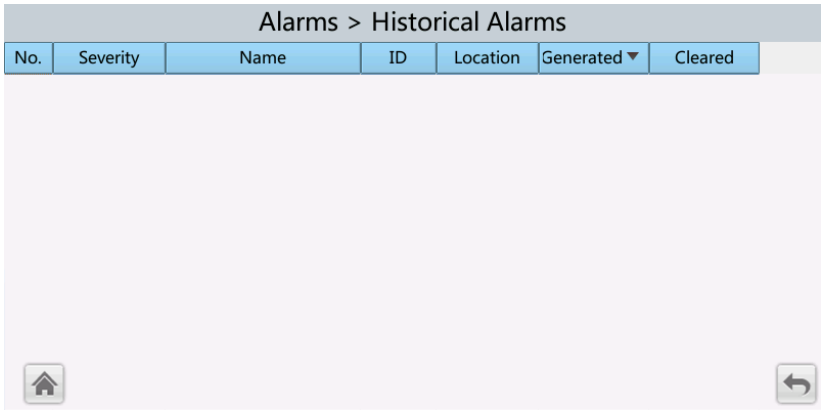

Buzzer Off

Two buzzer menus are available:

- **Buzzer On**

  If this selection is enabled, when a critical alarm, a minor alarm, or a certain warning is generated the buzzer is activated.
- **Buzzer Off**

  If this selection is enabled, the buzzer is muted.

If the buzzer is enabled, **Buzzer Off** is displayed on the operation screen.

Twinkle

When the UPS communicates with the northbound NMS, the function determines the position of the UPS in the NMS layout diagram.

4.1.2.4 Settings

On the **System Info** screen, tap to access the **Settings** screen.

Figure 4-9 Settings 1

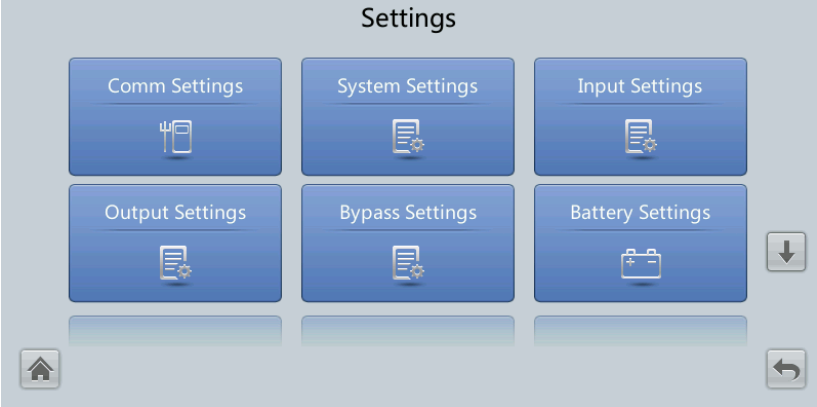

Figure 4-10 Settings 2

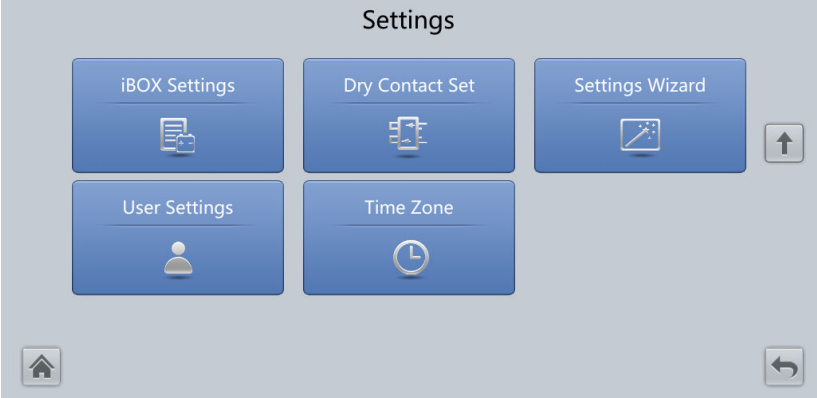

Comm Settings

Figure 4-11 Comm. Settings (lead-acid battery)

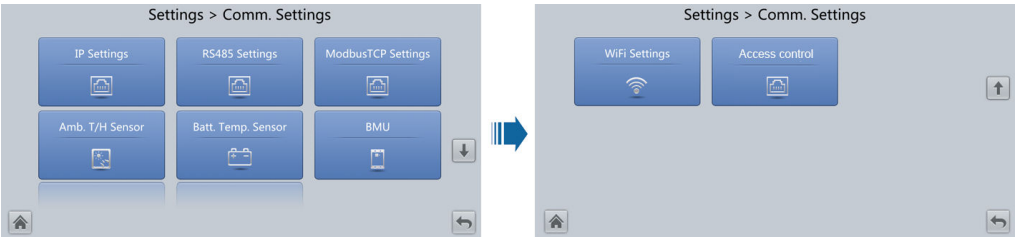

Figure 4-12 Comm. Settings (lithium battery)

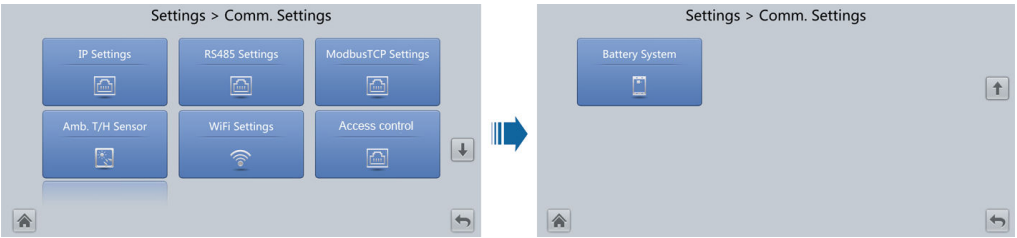

Figure 4-13 IP Settings

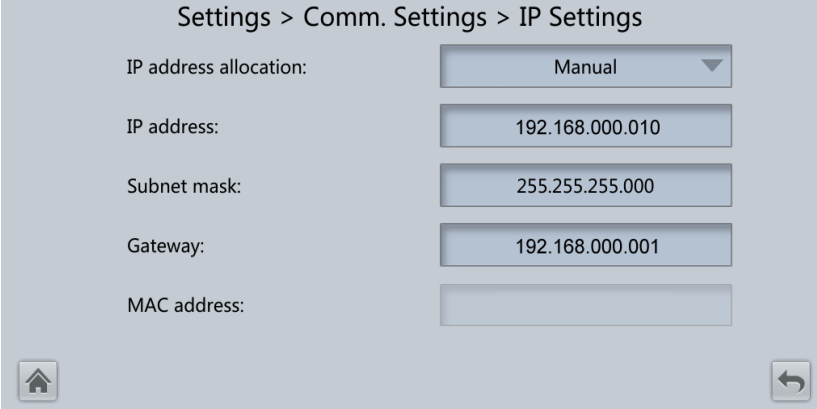

IP address allocation

- If the MDU is directly connected to a computer, the IP address can only be allocated manually. The IP addresses of the MDU and computer must be in the same network segment, and must be different.
- If the MDU is connected to a computer through a LAN switch or router with the DHCP function, the IP address can be allocated manually or automatically. Manual allocation is used by default.
  - **Manual**: Check that their IP addresses are two different values on the same network segment. Set the UPS IP address to be in the same subnet as the PC IP address. Perform the bitwise AND operation for the UPS IP address and the PC IP address with the subnet mask respectively. If the operation results are the same, the two IP addresses are in the same subnet.

    AND operation rule: 1 AND 1 = 1, 1 AND 0 = 0, 0 AND 1 = 0, 0 AND 0 = 0. That is when the corresponding bits are both 1, the result is 1. In other cases, the result is 0.

    Table 4-10 Bitwise AND operation example

N/A	PC IP address (182.98.225.125)	UPS IP address (182.98.225.112)
PC IP address/UPS IP address	10110110.01100010.11100001.01111101	10110110.01100010.11100001.01110000
Subnet mask (255.255.255.192)	11111111.11111111.11111111.11000000	11111111.11111111.11111111.11000000
Bitwise AND operation result	10110110.01100010.11100001.01000000	10110110.01100010.11100001.01000000

  - **Automatic**: The MDU automatically searches for available IP addresses in the connected network. Ensure that the MDU and PC are on the same network segment.

NOTE

After you restart the device, **IP address allocation** changes back to **Manual**. The IP address is set to the IP address set previously.

Item	Description	Default Value	Value Range
IP address	Specifies the IP address for the Ethernet. **NOTICE** Ensure that the UPS IP address is unique on the network segment. Otherwise, the WebUI display function may not function properly.	192.168.0.10	1.0.0.0–223.255.255.255
Subnet mask	Specifies the subnet mask of the Ethernet.	255.255.255.0	0.0.0.0–255.255.255.255
Gateway	Specifies the Ethernet gateway.	192.168.0.1	1.0.0.0–223.255.255.255
MAC address	Defines the physical address of network equipment and is not configurable.	N/A	N/A

Figure 4-14 RS485 settings

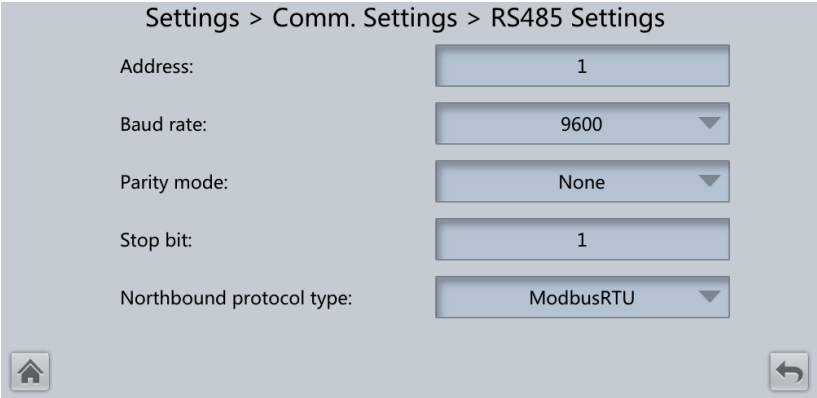

Item	Description	Default Value	Value Range
Address	This serial port address is allocated by the user.	1	1–254
Baud rate	Select a baud rate to match the user's network management conditions onsite.	9600	9600, 19200, 115200

 Copyright © Huawei Technologies Co., Ltd.

Item	Description	Default Value	Value Range
Parity mode	Verify the validity of RS485 communication characters. When a device node adopts RS485 communication, ensure that the parity modes for the device nodes are set to the same mode.	None	None, Odd, Even
Stop bit	Stop bit in the Modbus communication frame format. When the UPS is connected over the serial port Modbus, set this parameter based on the frame format that the upstream device Modbus supports.	1	1–2
Northbound protocol type	Set the northbound protocol type.	ModbusRTU	ModbusRTU, YDN

Figure 4-15 Modbus TCP settings

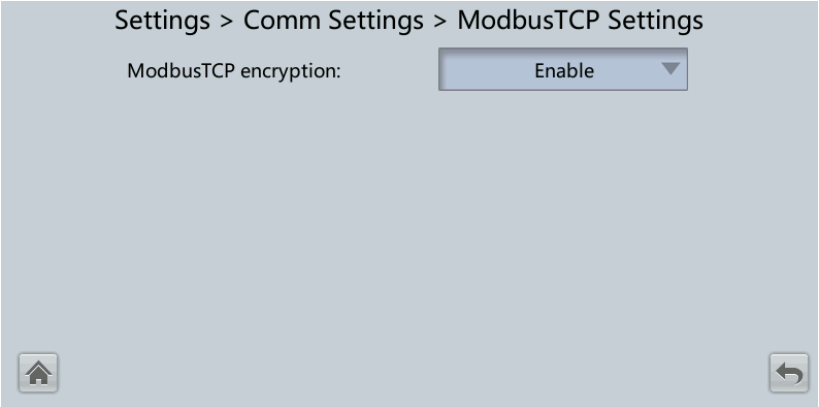

Item	Description	Default Value	Value Range
ModbusTCP encryption	If Modbus TCP is used for communication, communication links do not implement encryption or implement encryption based on the selected encryption mode.	Enable	Disable, Enable

Figure 4-16 Ambient temperature and humidity sensor

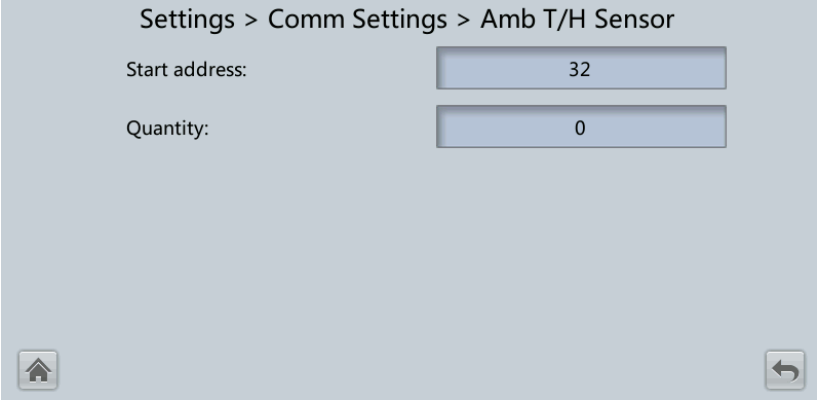

Item	Description	Default Value	Value Range
Start address	N/A	32	32–44
Quantity	Number of cascaded ambient temperature and humidity sensors	0	0–4

Figure 4-17 Battery temperature sensor

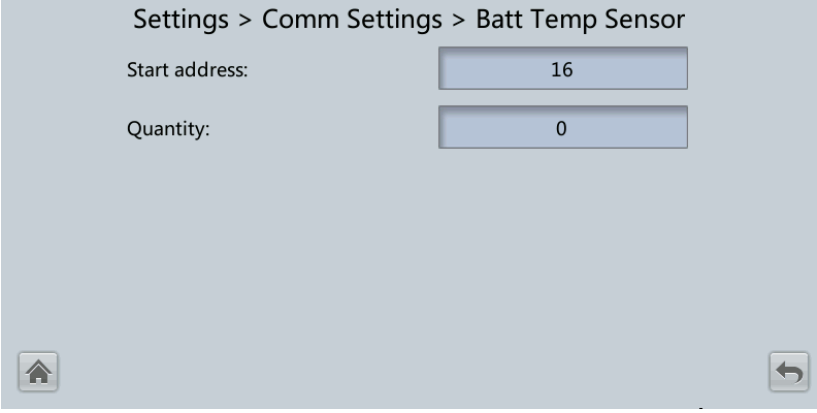

Item	Description	Default Value	Value Range
Start address	N/A	16	16–28
Quantity	Number of cascaded battery temperature sensors	0	0–4

 Copyright © Huawei Technologies Co., Ltd.

Figure 4-18 BMU

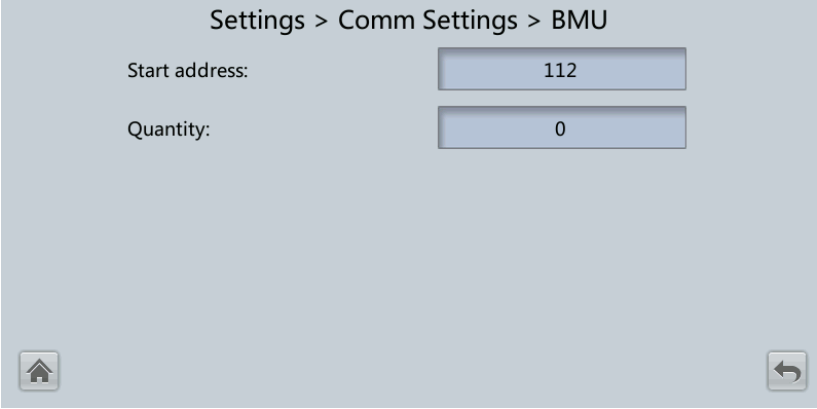

Item	Description	Default Value	Value Range
Start address	N/A	112	N/A
Quantity	Number of cascaded BMUs	0	0–12

Figure 4-19 WiFi communication settings

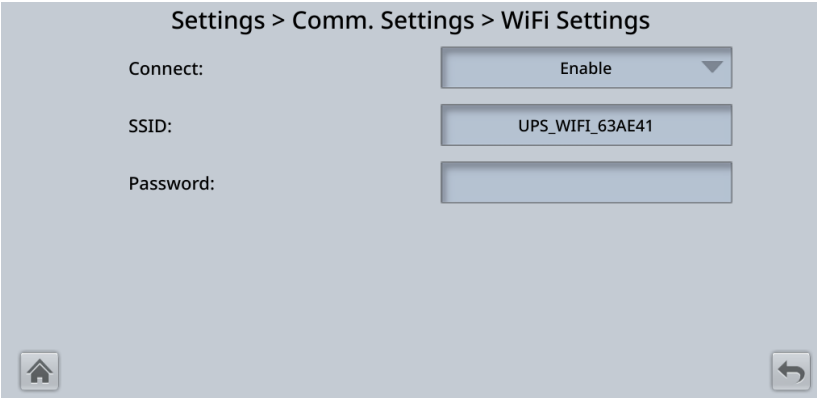

Item	Description	Default Value	Value Range
Connect	If this parameter is set to **Enable**, you can implement the WiFi function by connecting to the USB WiFi module.	Disable	Disable, Enable
SSID	When using the mobile app for site setup or inspection, set WiFi SSID after connecting a WiFi module over a USB port to identify the WiFi device to which the mobile phone is connected.	UPS_WIFI + Last six characters of the MAC address	N/A

 Copyright © Huawei Technologies Co., Ltd.

Item	Description	Default Value	Value Range
Password	The password for accessing WiFi.	Changeme	N/A

Figure 4-20 Access control

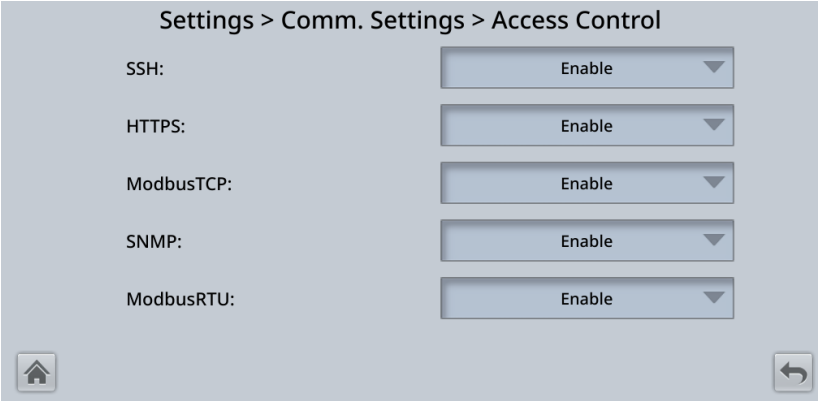

Item	Description	Default Value	Value Range
SSH	Refers to a secure encrypted transmission protocol used to access the UPS with a terminal tool. **Disable**: The SSH port is disabled and cannot be accessed. **Enable**: The SSH port is enabled and can be accessed.	Enable	Disable, Enable
HTTPS	Refers to a secure transmission protocol used to access the UPS through a browser. **Disable**: The HTTPS services are unavailable. **Read-only**: Only operator users are allowed to access the services and have only the read permission. **Enable**: All functions are available.	Enable	Disable, Enable, Read-only

 Copyright © Huawei Technologies Co., Ltd.

Item	Description	Default Value	Value Range
ModbusTCP	Refers to an Ethernet-based Modbus protocol used to connect to the NetEco. **Disable**: The Modbus TCP services are unavailable. **Read-only**: Only the read permission is enabled. Settings are not allowed. **NetEco**: The read permission and the write permission on related parameters supported by the NetEco are enabled. **Enable**: All functions are available.	Enable	Disable, Enable, Read-only, NetEco
SNMP	Refers to the Simple Network Management Protocol used to connect to the NetEco. **Disable**: The SNMP services are unavailable. **Read-only**: Only the read permission is enabled. Settings are not allowed. **NetEco**: The read permission and the write permission on related parameters supported by the NetEco are enabled. **Enable**: All functions are available.	Enable	Disable, Enable, Read-only, NetEco
ModbusRTU	Refers to a Modbus protocol based on the RS485 bus, which is used to connect to the NetEco. **Disable**: The Modbus RTU services are unavailable. **Read-only**: Only the read permission is enabled. Settings are not allowed. **NetEco**: The read permission and the write permission on related parameters supported by the NetEco are enabled. **Enable**: All functions are available.	Enable	Disable, Enable, Read-only, NetEco

 Copyright © Huawei Technologies Co., Ltd.

Figure 4-21 Battery System

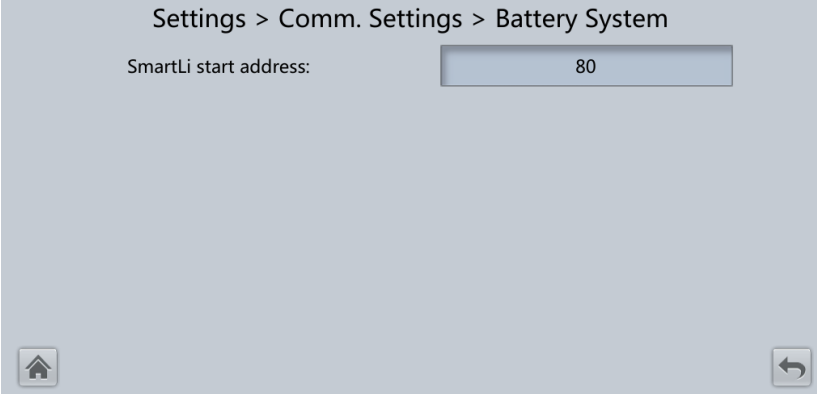

Item	Description	Default Value	Value Range
SmartLi start address	SmartLi communication address when the UPS queries SmartLi data	80	N/A

System Settings

Figure 4-22 System settings 1

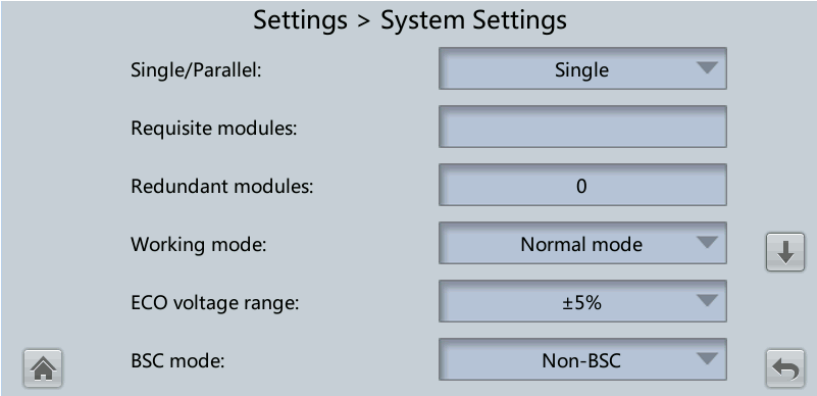

Figure 4-23 System settings 2

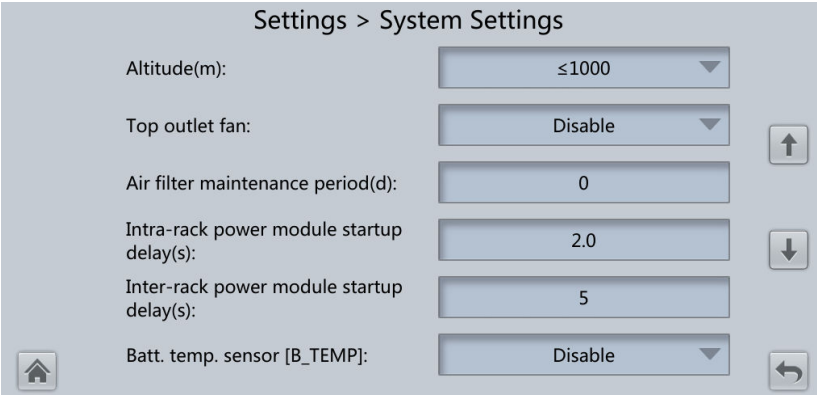

Figure 4-24 System settings 3

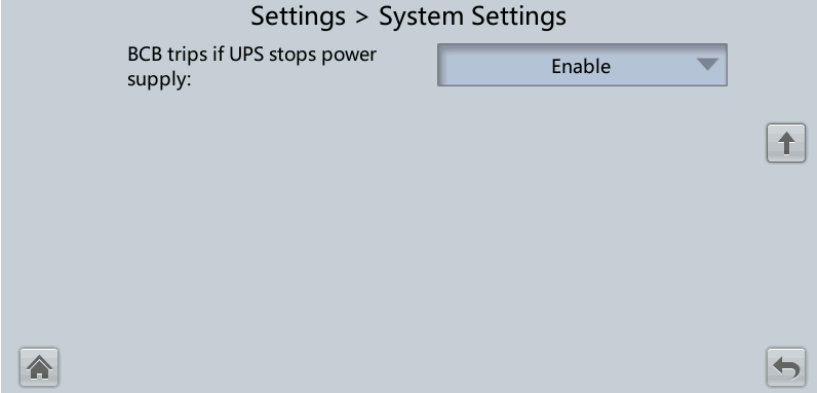

Item	Description	Default Value	Value Range
Single/ Parallel	Specifies whether the UPS works in single mode or parallel mode.	Single	Single, Parallel
Requisite modules	Matches the system capacity.	4	N/A
Redundant modules	Set this parameter based on load capacity and redundancy requirements.	0	N/A
Working mode	UPS working mode	Normal mode	Normal mode, ECO, Self-load mode, Converter mode
ECO voltage range	In ECO mode, when the difference between the bypass voltage and the rated voltage is greater than this value, the system determines that the ECO voltage is abnormal and transfers to normal mode.	±5%	±5%, ±6%, ±7%, ±8%, ±9%, ±10%

 Copyright © Huawei Technologies Co., Ltd.

Item	Description	Default Value	Value Range
BSC mode	• Set this parameter to **Standard BSC** for a dual-bus system. • After setting this parameter to **Standard BSC**, you need to set the two UPS systems in the dual-bus system to **BSC master system** and **BSC slave system** respectively in the **BSC master/slave system** setting. (The two UPS systems cannot be BSC master systems or BSC slave systems at the same time. If you need to change the settings in the future, perform operations under the guidance of maintenance engineers.) **NOTE** Ensure that the BSC signal cable between the BSC master and slave systems is properly connected and that BSC-related hardware is properly installed.	Non-BSC	Non-BSC, Standard BSC mode, and Opt. BSC card mode
Altitude (m)	Set this parameter based on the altitude of the place where the rack is used.	≤ 1000	≤ 1000, 1000–2000, 2000–3000, 3000–4000, 4000–5000
Top outlet fan	Enable this parameter if a top outlet fan is configured. Then the fan running status can be checked.	Disable	Disable, Enable
Air filter maintenance period (d)	Specifies the rack air filter maintenance interval. If it is set to **0**, there is no reminder.	0	0–365
Intra-rack power module start delay (s)	These two parameters enable the UPS to control the interval that each rack (or module) transfers from battery mode to normal mode, which reduces the impact on the generator or power grid. In the case of battery undervoltage, the system automatically	1.0	0.5–120.0

 Copyright © Huawei Technologies Co., Ltd.

Item	Description	Default Value	Value Range
Inter-rack power module start delay (s)	shortens the delay for transferring to normal mode to 1/8 of the normal delay to accelerate the transfer and prevent battery overdischarge. The start delay of a module in a rack varies depending on the rack number and module number. #1 module in rack 1 does not have a start delay.	5	2–120
Batt. temp. sensor [B_TEMP]	The short-distance battery temperature sensor monitors the ambient temperature near batteries, and ensures that batteries work reliably and securely.	Disable	Disable, Enable
BCB trips if UPS stops power supply	Indicates whether the BCB trips when the system stops supplying power and the output power is off.	Enable	Disable, Enable

Input Settings

Figure 4-25 Input settings

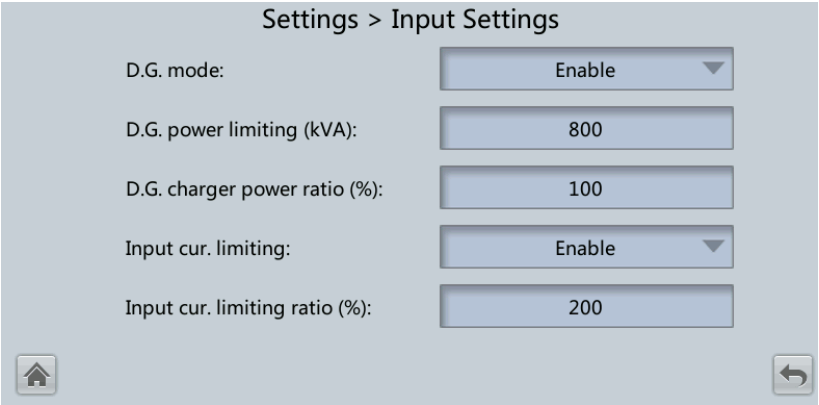

Item	Description	Default Value	Value Range
D.G. mode	Set this parameter to **Enable** when a D.G. connects to the input PDC. The UPS enters the D.G. mode when a D.G. is detected over dry contacts.	Disable	Disable, Enable

 Copyright © Huawei Technologies Co., Ltd.

Item	Description	Default Value	Value Range
D.G. power limiting (kVA)	Set these two parameters to control the valid input current and limiting input current, which prevents load impact and facilitates better cooperation between the UPS and the D.G.	Depends on the actual model.	0 kVA to 5000 kVA
D.G. charger power ratio (%)		100	0%–100%
Input cur. limiting	Specifies whether to enable or disable input current limiting to protect generators.	Disable	Disable, Enable
Input cur. limiting ratio (%)	Limits the input current to protect the D.G.	200%	50%–200%

Output Settings

Figure 4-26 Output settings

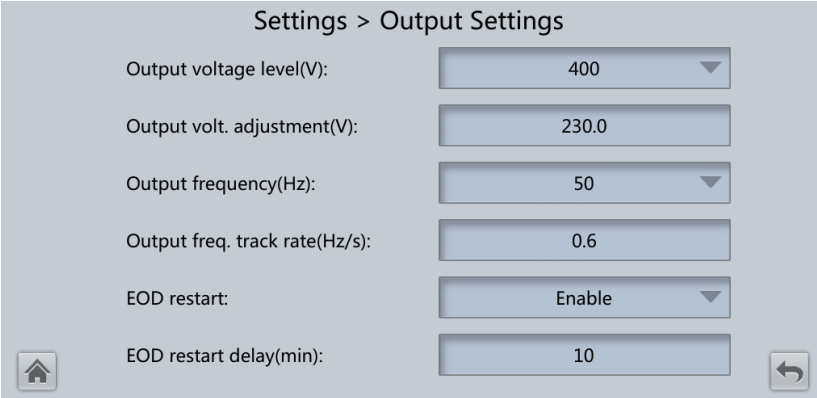

Item	Description	Default Value	Value Range
Output voltage level (V)	Specifies the system output voltage level. This parameter is configurable only after the inverter shuts down. After you change the voltage level, the upper limit of the bypass voltage restores to the default value. (If the voltage level is 380 V or 400 V, the default upper limit is +15%. If the voltage level is 415 V, the default upper limit is +10%.)	400	380, 400, 415

Item	Description	Default Value	Value Range
Output volt. adjustment (V)	The output voltage can be slightly adjusted based on the onsite power distribution condition to ensure a minimum difference between the output voltage and the bypass voltage and facilitate uninterruptible power supply when the UPS transfers from normal mode to bypass mode.	The default value is 220.0, 230.0, and 240.0 when the voltage level is 380 V, 400 V, and 415 V respectively.	380 V: 209.0–231.0 400 V: 218.5–241.5 415 V: 228.0–252.0
Output frequency (Hz)	Specifies the system output frequency level.	50 Hz	50 Hz, 60 Hz
Output freq. track rate (Hz/s)	This parameter can be adjusted based on site requirements. If **Output freq. track rate (Hz/s)** is slow, the inverter frequency is different from the bypass frequency when the bypass frequency changes. If output is overloaded or the inverter is faulty, an interruption (less than 20 ms) occurs when the UPS transfers from normal mode to bypass mode. If **Output freq. track rate (Hz/s)** is fast, the inverter frequency is unstable.	0.6 Hz/s	0.1 Hz/s to 2.0 Hz/s
EOD restart	If the mains is not functioning normally, the UPS will transfer to battery mode. When batteries reach the EOD threshold, the bypass is disabled, and **EOD restart** is **Enable**, the UPS will restart as soon as the mains resumes. If **EOD restart** is disabled, clear the alarm manually or enable the restart function for the UPS.	Enable	Disable, Enable

 Copyright © Huawei Technologies Co., Ltd.

Item	Description	Default Value	Value Range
EOD restart delay (min)	If **EOD restart** is set to **Enable**, the UPS starts working after the time set for **EOD restart delay** when the input recovers from the power failure upon EOD.	10	1–1440

Bypass Settings

Figure 4-27 Bypass settings

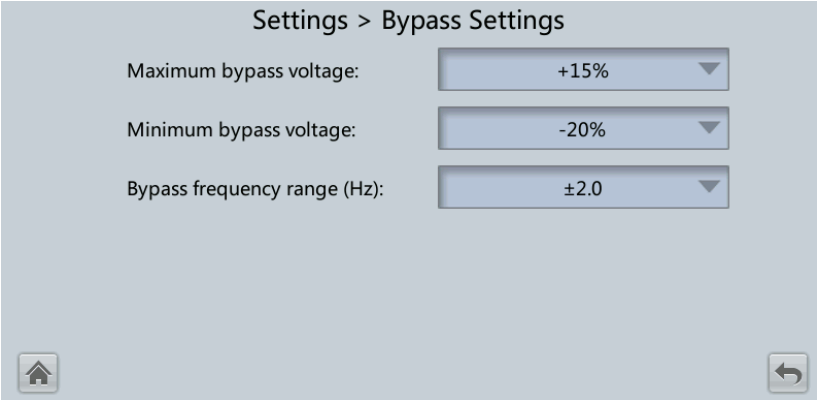

Item	Description	Default Value	Value Range
Maximum bypass voltage	When the difference between the bypass voltage and the rated voltage exceeds the upper threshold for the bypass voltage, the system determines that the bypass voltage is not normal and that the bypass is unavailable.	• When the voltage level is 380 V, the value range is +10%, +15%, +20%, and +25%. The default value is +15%. • When the voltage level is 400 V, the value range is +10%, +15%, and +20%. The default value is +15%. • When the voltage level is 415 V, the value range is +10% and +15%. The default value is +10%.	

Item	Description	Default Value	Value Range
Minimum bypass voltage	When the difference between the bypass voltage and the rated voltage exceeds the upper threshold for the bypass voltage, the system determines that the bypass voltage is not normal and that the bypass is unavailable.	–20%	–10%, –15%, –20%, –30%, –40%, –50%, –60%
Bypass frequency range (Hz)	When the difference between the bypass input frequency and the rated frequency is greater than the specified value, the system determines that the bypass frequency is abnormal, so the bypass is unavailable.	±2 Hz	±0.5 Hz to ±6 Hz

Battery Settings

NOTICE

Battery parameter settings impact battery maintenance, battery lifespan, and UPS discharge time. When you set battery parameters, note the following:

- **Battery string sharing** is unavailable when **Single/Parallel** is set as **Single**.
- **Battery string sharing** affects the actual charge current and the estimated discharge time. An incorrect setting will cause a high or low charge current, which may damage the batteries. An incorrect estimated discharge time may cause a data backup fault.
- When you set parameters, ensure the following: **Dis. cur. 0.1C EOD** ≥ **Dis. cur. 0.3C EOD** ≥ **Dis. cur. 0.5C EOD** ≥ **Dis. cur. 1.0C EOD**.
- A cell consists of electrodes and electrolyte, which is the basic unit for the battery. Each cell has a nominal voltage of 2 V. A battery is a module consisting of single or multiple cells in a shell. Each battery has a nominal voltage of 2 V, 6 V, or 12 V.

 Copyright © Huawei Technologies Co., Ltd.

Figure 4-28 Battery Settings (lead-acid battery)

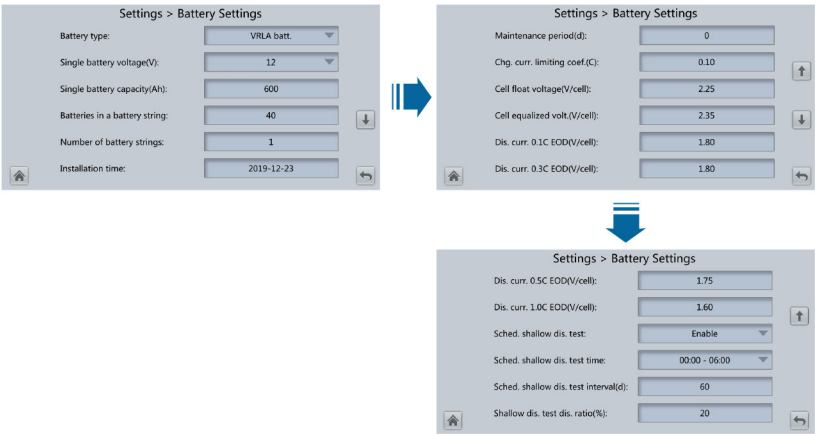

Figure 4-29 Battery Settings (lithium battery)

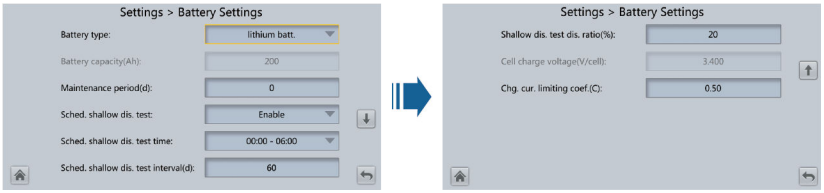

Item	Description	Default Value	Value Range
Battery type	Specifies the type of batteries connected to the UPS.	VRLA batt.	VRLA batt., lithium batt.
Battery capacity(Ah)	Specifies the capacity of lithium batteries connected to the UPS (the value is automatically obtained).	N/A	N/A
Single battery voltage(V)	Specifies the voltage of each battery that is connected in series in a battery string.	Depends on the actual model.	2, 6, 12
Single battery capacity(Ah)	Specifies the capacity of each battery that is connected in series in a battery string.	Depends on the actual model.	5–9999
Batteries in a battery string	Specifies the number of batteries in a battery string.	Depends on the actual model.	Depends on the model.
Number of battery strings	Specifies the number of battery strings connected in parallel.	Depends on the actual model.	1–6

 Copyright © Huawei Technologies Co., Ltd.

Item	Description	Default Value	Value Range
Installation time	A battery maintenance reminder is displayed when the maintenance time (counted from the installation time) comes.	N/A	N/A
Maintenance period(d)	Specifies the interval for reminding users of battery maintenance.	0	0–365
Cell float voltage(V/cell)	Specifies the battery float charging voltage.	2.25	2.23–2.30
Cell equalized volt.(V/cell)	Specifies the battery equalized charging voltage.	2.35	2.30–2.40
Dis. curr. 0.1C EOD(V/cell)	Specifies the EOD threshold when the discharge current is 0.1C, 0.3C, 0.5C, or 1.0C respectively.	1.80	1.80–1.90
Dis. curr. 0.3C EOD(V/cell)		1.80	1.80–1.90
Dis. curr. 0.5C EOD(V/cell)		1.75	1.75–1.85
Dis. curr. 1.0C EOD(V/cell)		1.60	1.60–1.75
Sched. shallow dis. test	When certain conditions are met, the charger shuts down, and batteries supply power to loads. The system records the battery discharge data as a reference for battery capacity and lifespan.	Disable	Disable, Enable
Sched. shallow dis. test time	Specifies the time for a scheduled shallow discharge test.	00:00 - 06:00	00:00 - 06:00, 06:00 - 12:00, 12:00 - 18:00, 18:00 - 24:00
Sched. shallow dis. test interval(d)	Specifies the interval for a scheduled shallow discharge test.	60	30–90
Shallow dis. test dis. ratio(%)	Specifies the proportion of the discharge capacity to the total discharge capacity. The value is configurable in any mode.	20	10–50

 Copyright © Huawei Technologies Co., Ltd.

Item	Description	Default Value	Value Range
Cell charge voltage(V/cell)	Specifies the charge voltage of lithium batteries (the value is automatically obtained).	N/A	N/A
Chg. cur. limiting coef. (C)	Lithium battery: You can set the charge current limit value. The current limit coefficient is a multiple of the battery capacity.	0.50	0.10–1.00
	Lead-acid battery: You can set the charge current limit value. The current limit coefficient is a multiple of the battery capacity.	0.10	0.05–0.15

iBOX Settings

Figure 4-30 iBOX Settings

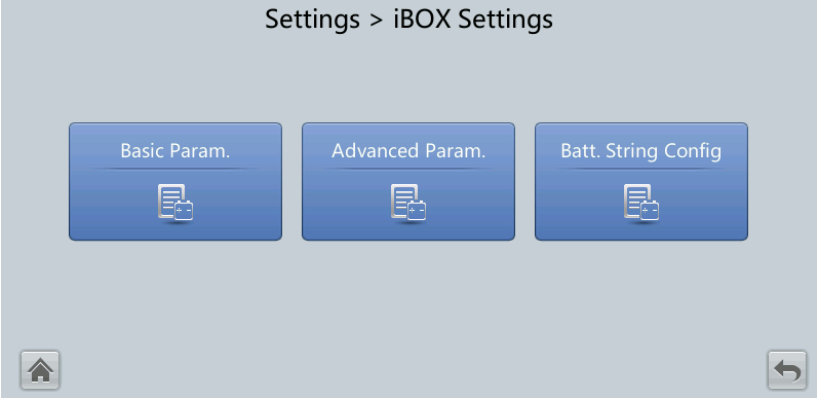

NOTE

On the **System Info** > **Settings** > **iBOX Settings** > **Basic Param.** screen, if the **Number of iBOXs** is not **0** the **Batt. String Config** is displayed on the **iBOX Settings** screen.

Figure 4-31 Basic Param.

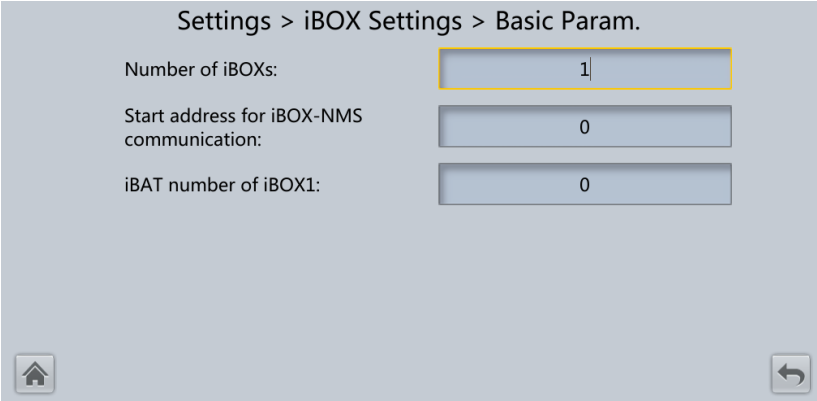

Item	Description	Default Value	Value Range
Number of iBOXs	The number of iBOXs connected to UPS.	0	0–6
Start address for iBOX-NMS communication	Specifies the communication address when the northbound device queries iBOX data.	0	0–124
iBOX number of iBATs	Specifies the number of iBATs managed by the iBOX.	0	0–300

Figure 4-32 Advanced Param.

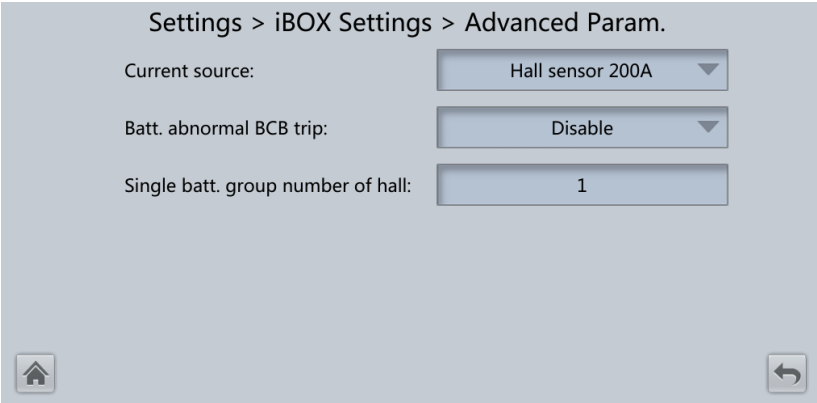

Item	Description	Default Value	Value Range
Current source	Specifications of the Hall effect sensor used to detect iBOX current.	Hall sensor 200A	Hall sensor 200A, Hall sensor 600A
Batt. abnormal BCB trip	Specifies whether BCB trips when batteries are abnormal.	Disable	Disable, Enable
Single batt. group number of hall	**Single batt. group number of hall** is equal to the number of Hall effect sensors at the positive or negative terminal of a battery string (Single batt. group number of hall≥ 1).	1	1–8

 Copyright © Huawei Technologies Co., Ltd.

Figure 4-33 Batt. String Config

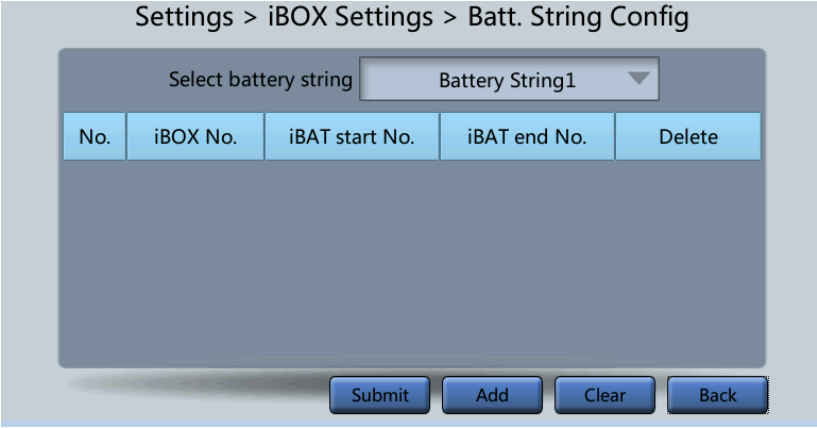

Set the iBOX and iBAT number for each battery string.

Dry Contact Set

NOTICE

- Set only the dry contacts that are needed. Otherwise, the UPS may not run properly.
- When a dry contact card is disabled, its dry contact signals are disabled.
- After a dry contact card is enabled, its dry contact signals can be displayed on the LCD.
- Disable all the dry contacts for a dry contact card that is not connected and all the dry contacts that are not used to prevent false alarms.
- ( ) encloses a unit, and [ ] encloses silk screen.

Specify dry contact settings on the following cards:

- Dry contact card (MUE05A): provides dry contact signals for the battery grounding failure detector, D.G., BCB box, and PDCs.
- Backfeed protection board (MUE06A): provides backfeed protection signals. This board can be enabled or disabled.
- Monitoring interface card (MUS05A): provides four routes of configurable output dry contact signals.
- Dry contact extended card (MUE07A): provides five routes of input signals and five routes of output signals.

Item	Description
MUE05A connection	Specifies the MUE05A connection status. Independent input signals can be enabled only when this parameter is set to **Enable**.
Batter ground fault [BTG]	Enable or disable battery grounding fault detection.

Item	Description
D.G. connection [GEN]	Enable or disable D.G. connection detection.
BCB connection [OL]	Enable or disable BCB connection detection.
Battery breaker [STA]	Enable or disable battery circuit breaker status detection.
PDC output breaker [OUT]	Enable or disable PDC output circuit breaker status detection.
PDC maintenance breaker [MT]	Enable or disable PDC maintenance circuit breaker status detection.
BP/SYSMT Switch	If the BP/SYSMT switch is set to **Enable**, the port has dry contact signal access. Using the port depends on the status of the BP/SYSMT switch.
BP/SYSMT switch function	If the BP/SYSMT switch is set to **Enable**, this parameter is displayed on the screen. Set this parameter to determine whether the port is used to detect the status of the PDU bypass input switch, or system maintenance switch.
SPD/SYSOUT Switch	If the SPD/SYSOUT switch is set to **Enable**, the port has dry contact signal access. How a user uses the port depends on the status of the SPD/SYSOUT switch.
SPD/SYSOUT switch function	If the SPD/SYSOUT switch is set to **Enable**, this parameter is displayed on the screen. Set this parameter to determine whether the port is used to detect the status of the PDU input surge protector, or system output switch.
MUE06A connection	Specifies the MUE06A connection status. If this parameter is set to **Enable**, the mains and bypass backfeed protection is enabled.
MUS05A DO_1 Action, MUS05A DO_2 Action, MUS05A DO_3 Action, MUS05A DO_4 Action	Controls the status of DO ports on the MUS05A dry contact card.
MUE07A DO_1 Action, MUE07A DO_2 Action, MUE07A DO_3 Action, MUE07A DO_4 Action, MUE07A DO_5 Action	Controls the status of DO ports on the MUE07A extended dry contact card.
MUS05A DO_1, MUS05A DO_2, MUS05A DO_3, MUS05A DO_4	Corresponds to the signal of the output dry contact DO on the MUS05A.

 Copyright © Huawei Technologies Co., Ltd.

Item	Description
MUE07A DO_1, MUE07A DO_2, MUE07A DO_3, MUE07A DO_4, MUE07A DO_5	Corresponds to the signal of the output dry contact DO on the MUE07A.
MUE07A DI_1, MUE07A DI_2, MUE07A DI_3, MUE07A DI_4, MUE07A DI_5	Corresponds to the signal of the input dry contact DI on the MUE07A.

User Settings

Figure 4-34 User settings

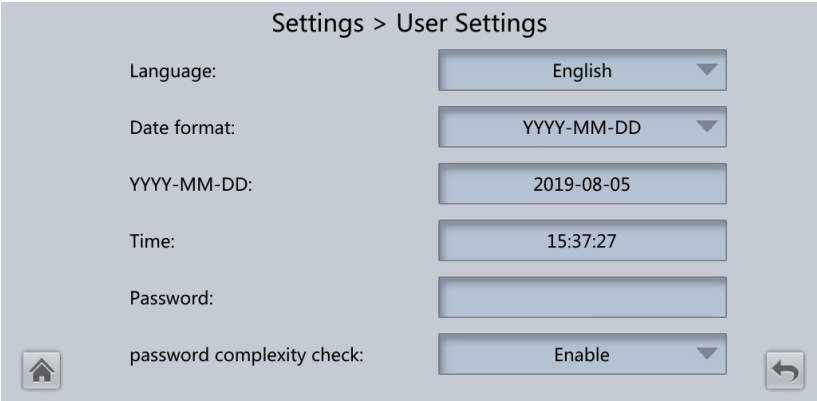

Item	Description	Default Value	Value Range
Language	Thirteen languages are supported	English	English, Chinese, Spanish, Dutch, French, German, Italian, Polish, Portuguese, Russian, Swedish, Turkish, Japanese
Password	N/A	000001	N/A

 Copyright © Huawei Technologies Co., Ltd.

Item	Description	Default Value	Value Range
password complexity check	If the password complexity check is disabled, the user password is required to be a string of six to eight digits. If the password complexity check is enabled, the password is required to be a string of 6–20 characters and contain at least two types of characters.	Enable	Disable, Enable

Time Zone

Figure 4-35 Time zone

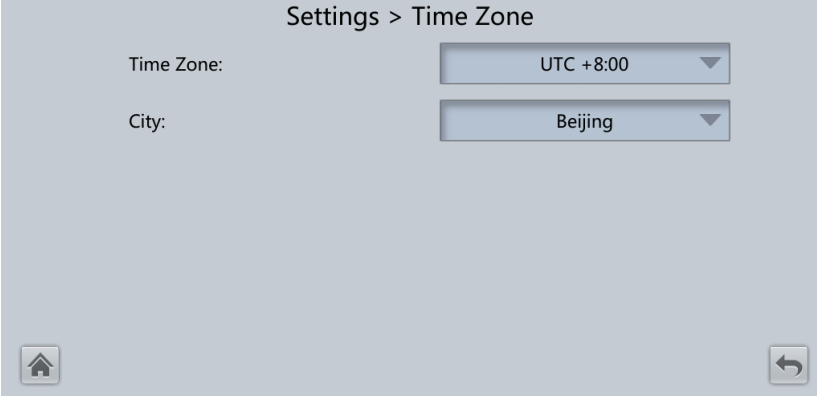

- Set the local time zone.
- You can enable DST in areas where DST is used.

4.1.2.5 Maintenance

On the **System Info** screen, tap to display the **Maintenance** screen.

Figure 4-36 Maintenance 1

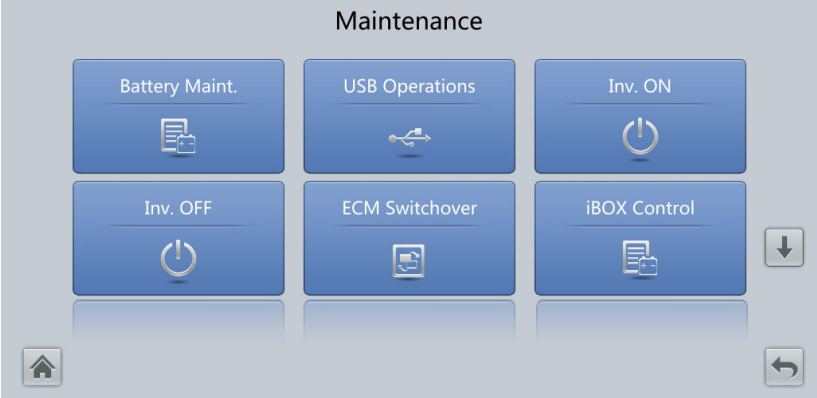

Figure 4-37 Maintenance 2

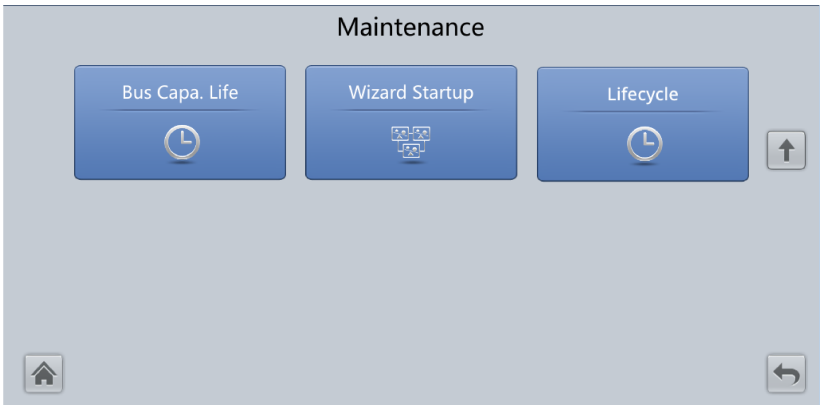

NOTE

- On the **System Info** > **Settings** > **iBOX Settings** > **Basic Param.** screen, if the **Number of iBOXs** is not **0** the **Maintenance** is displayed on the **iBOX Control** screen.
- Choose **Monitoring** > **UPS System** > **Running Parameter** > **System Settings** on the WebUI, if the **Bus capa. life** is set to **Enable**, the **Maintenance** is displayed on the **Bus Capa. Life** screen.

Battery Maint. screen

NOTICE

- Perform battery maintenance when no alarm is active on the UPS. Otherwise, the UPS may supply no power.
- A proportion of battery capacity will discharge during battery maintenance. This reduces the discharge time before the next charge.
- Do not perform battery maintenance when a D.G. is connected.

Battery maintenance includes **Forced Equalized Charging**, **Shallow Dis. Test**, and **Capacity Test**.

Figure 4-38 Battery Maint. (lead-acid battery)

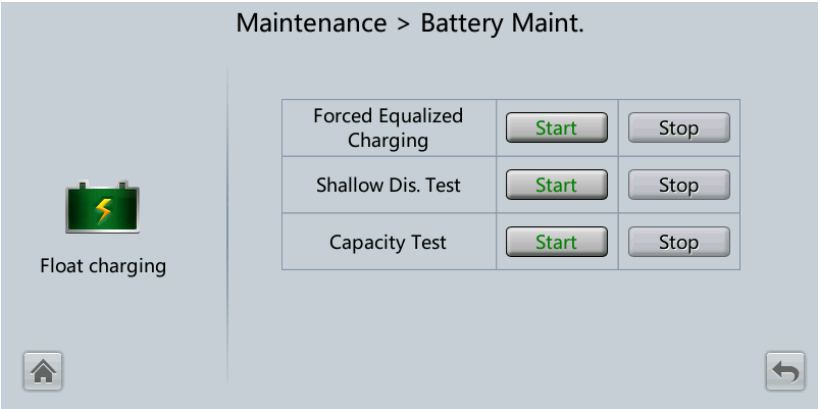

Figure 4-39 Battery Maint. (lithium battery)

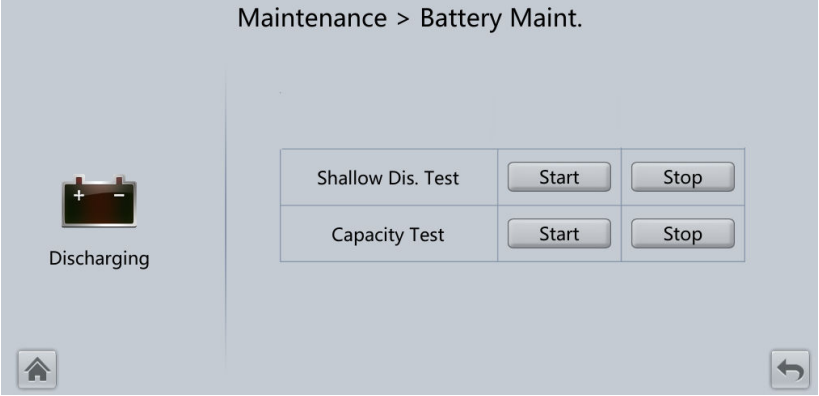

Item	Description
Forced Equalized Charging	Forcibly perform equalized charging on batteries.
Shallow Dis. Test	Partially discharge batteries. A shallow discharge test can be conducted to test the battery loop reliability and short-time discharge capacity when the batteries have not discharged for a long time.
Capacity Test	Fully discharge batteries. A deep discharge test is conducted to obtain the battery discharge performance data.

USB Operations

You can export **Fault Data**, and perform **Upgrade Software**, **BSP Upgrade**, **Export Config.**, and **Import Config.** with USB.

Figure 4-40 USB Operations

 Copyright © Huawei Technologies Co., Ltd.

Starting or Shutting Down the Inverter

Item	Description
Inv. ON	The **Inv. ON** screen allows you to start the inverter manually.
Inv. OFF	The **Inv. OFF** screen allows you to shut down the inverter manually.

ECM Switchover

NOTICE

- Only professional personnel are allowed to use this function.
- Clear faults before performing ECM active/standby switchover.
- After an ECM is inserted, active and standby switchover is supported only after the ECM is configured and starts working properly (about 30 seconds).

If the ECM to be maintained is still working, perform ECM active/standby switchover on this screen (a dialog box is displayed for you to confirm this operation). After performing active/standby switchover, ensure that this ECM is in standby state (that is, the green indicator is blinking) and then maintain the ECM.

iBOX control

Reset the specified iBOX and iBAT, and sets the iBAT blinking function or measures the iBAT internal resistance.

Item	Description
Reset	Restart an iBAT or an iBOX.
Blink	Make the red indicator on the iBAT start or stop blinking super fast.
Internal resistance	Measure the battery internal resistance. If the condition for measuring internal resistance is met (batteries are fully charged), you can tap **Measure** to start measuring the internal resistance of the selected iBAT in an iBOX. **NOTE** The interval between two measurement operations must be greater than 10 minutes.

Bus capacitor life forecast

If the service life of a capacitor is about to end, that is, **Module X bus capacitor life (y)** is less than 1.0, contact Huawei technical support to replace the power module.

 Copyright © Huawei Technologies Co., Ltd.

Wizard Startup

The wizard startup can be used to test the bypass, mains inverter, inverter/bypass switch, battery inverter, battery charging capability, battery switch tripping and so on.

Perform operations as prompted.

NOTICE

Before starting the wizard, ensure that:

- The system is a single UPS system.
- No minor or critical alarm occurs.
- The UPS works in normal mode with a load ratio fluctuation less than 10%.
- The UPS generates no battery overtemperature, overvoltage, or overcurrent alarm. No generator is connected to the UPS.
- The mains, batteries, charger, and discharger are normal. No overload alarm is generated.
- SOC > 30%

Figure 4-41 Wizard startup

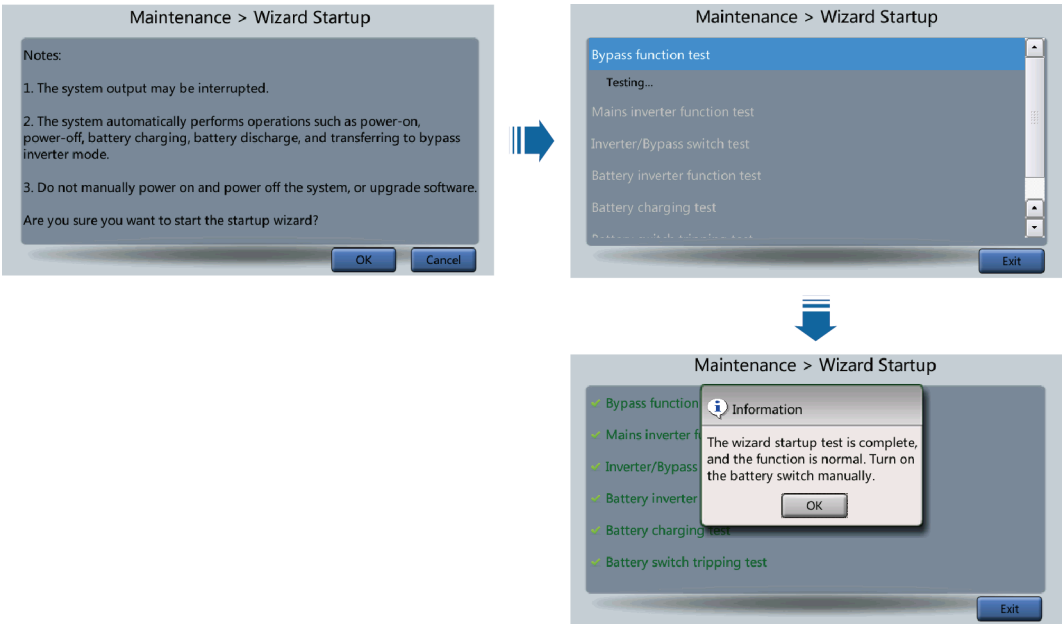

NOTE

On the **System Info** > **Settings** > **Dry Contact Set** screen, set **MUE05A connection** to **Enable**, and set **BCB connection [OL]** to **Enable**. Wizard-based startup can be used to test the battery switch tripping function.

Lifecycle

On **Lifecycle**, you can view monitor information such as **First Power-on**, **Arrival Date**, and **Service Life**.

4.1.2.6 About Screen

On the **System Info** screen, tap **About** to view the UPS model, manufacturer name, monitoring version and power version, as shown in **Figure 4-42**. To view version details, tap **Version Info**.

Figure 4-42 About screen

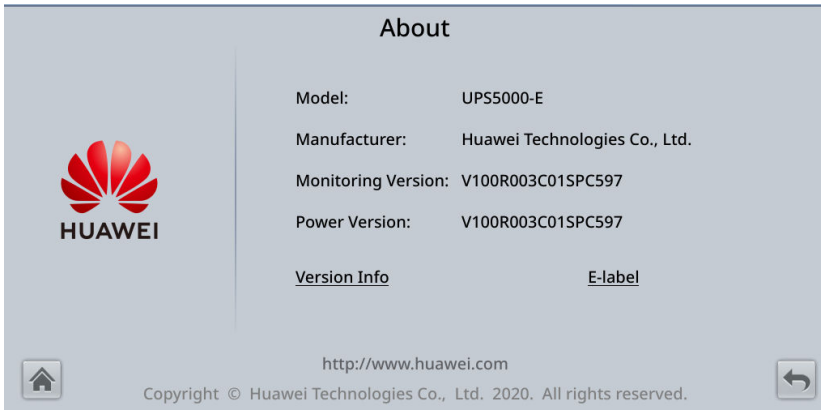

4.1.3 System Status

On the **System Status** to view the mains input, bypass input, load, and battery information.

Figure 4-43 System status

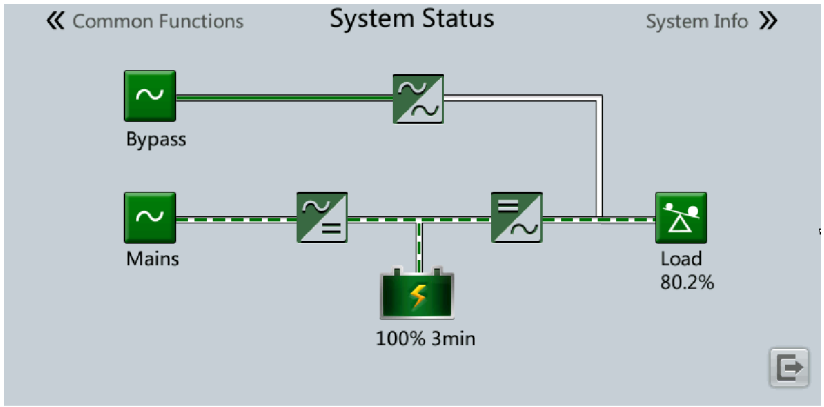

4.1.4 Common Functions

Figure 4-44 Common functions 1

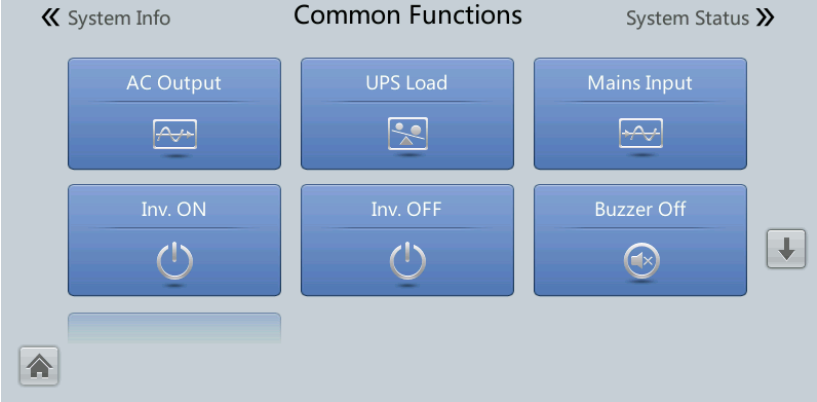

Figure 4-45 Common functions 2

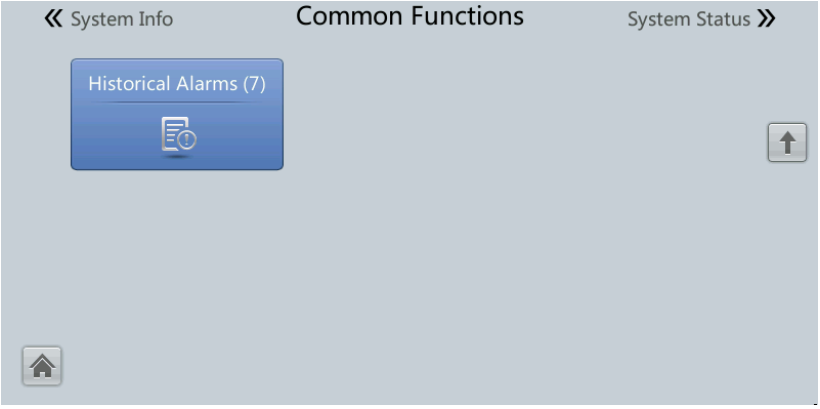

4.2 WebUI

4.2.1 Login

Context

Internet Explorer 11 is used as the example browser.

The system supports Internet Explorer 11 and Firefox 31.0.

Procedure

Step 1 Open the browser and choose **Tools** > **Internet Options**.

Step 2 On the **Advanced** tab page, ensure that **Use TLS 1.0**, and **Use TLS 1.1** are selected and click **OK**.

 Copyright © Huawei Technologies Co., Ltd.

Figure 4-46 Settings in the Internet Options dialog box

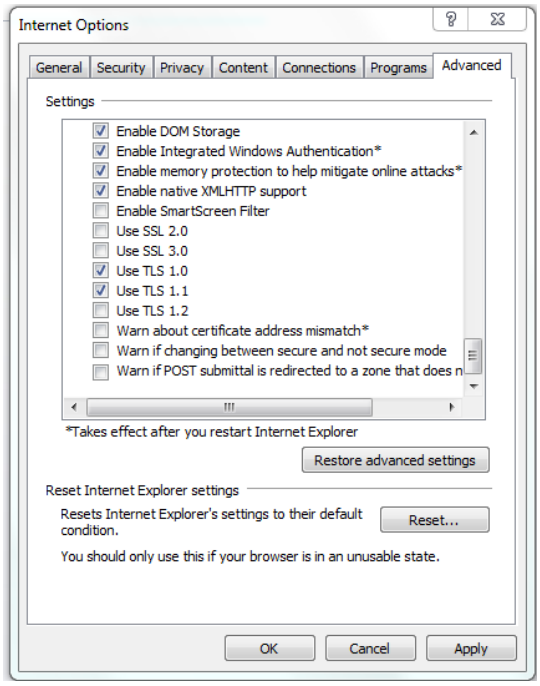

Step 3 Enter **https://*UPS IP address*** in the address box of the browser, select a language, set **User name** and **Password**, and click **Login**.

NOTE

The preset UPS IP address is 192.168.0.10. You can set the UPS Ethernet IP address on the LCD or WebUI. The value range is 1.0.0.0–223.255.255.255.

Table 4-11 User description

Default User	Preset Password	User Rights
admin (system administrator)	Changeme	Performs all operations on the LCD and WebUI, including system running information browsing, system information exporting, parameter setting, system control, system configuration, and system maintenance.
operator (common user)	Changeme	Only browses the system running information, exports system information, starts/shuts down the inverter, rectifies faults, and controls the buzzer. Other control and maintenance functions that may affect system operation are invisible and parameters cannot be set.

NOTE

- If an incorrect password is entered five consecutive times, the account will be logged out for 5 minutes.
- After a user logs in to the WebUI, if another user logs in with the same user name, the current account will be logged out.
- It is advised to change the password after the first login using **User Mgmt.** on the **Config.** page to prevent unauthorized access.

----End

4.2.2 Monitoring

Figure 4-47 Monitoring

Item	Description
UPS system	View **Running Information** of the UPS, set **Running Parameter** for the UPS, and perform the **Running Control** operation on the UPS.
Bypass	View the bypass input **Running Information** and set **Running Parameter**.
Module Summary	Query the module **Running Information** and set **Running Parameter**.
ECM Summary	Set **Running Parameter** for the ECM.
Battery System	View the battery **Running Information** and set **Running Parameter**.
Battery String Summary	Set parameters for the iBOX and iBAT connected to each battery string.

 Copyright © Huawei Technologies Co., Ltd.

UPS system

Table 4-12 System settings

Item	Description	Default Value	Value Range
High ambient temperature alarm threshold (°C)	An alarm is generated when the ambient temperature reaches or exceeds the threshold specified by this parameter.	55	40–60
Low ambient temperature alarm threshold (°C)	An alarm is generated when the ambient temperature is lower than the threshold specified by this parameter.	–10	–20 to 0
EPO detection	Indicates whether to enable emergency power-off (EPO). EPO is performed only when this parameter is enabled and the EPO switch is triggered. When **EPO detection** is changed from **Disable** to **Enable**, check that the EPO cable is connected correctly.	Disable	Disable, Enable
Bus capa. life	If this parameter is set to **Enable**, the UPS detects the bus capacitor lifespan.	Enable	Disable, Enable
Paral. sys. hibernate	When customer loads are light, enable parallel hibernation to alternate modules in hibernation mode, which can prolong their service life and improve the system efficiency.	Disable	Disable, Enable
Module cycle hiber. period (d)	Indicates the rotation interval of modules in hibernation mode. The default value is 30, which means that the hibernating module is rotated every 30 days.	30	1–100
D.G. ECO bypass supply	Indicates whether ECO bypass is allowed to supply power in D.G. mode. When the D.G. is connected to the dry contact signal GEN: ● If this parameter is set to **Enable**, the system can enter ECO bypass mode when the D.G. supplies power to the bypass and the ECO function is enabled. ● If this parameter is set to **Disable**, the system is not allowed to enter ECO mode when the D.G. supplies power to the bypass.	Enable	Disable, Enable

 Copyright © Huawei Technologies Co., Ltd.

Item	Description	Default Value	Value Range
RAM verification	Enable or disable the memory check function. If this parameter is set to **Enable**, the control chip RAM working status is checked regularly. If this parameter is set to **Disable**, regular check is disabled.	Disable	Disable, Enable
Collect real-time site waveform	If this parameter is set to **Enable**, one waveform can be stored manually.	Disable	Disable, Enable
BCB trips in case of EOD	If this parameter is set to **Enable**, the BCB will trip in case of EOD.	Enable	Disable, Enable

Table 4-13 Input settings

Item	Description	Default Value	Value Range
Input adaptability	Input adaptability mode 1: It is applicable to the normal power grid and DGs, and DGs that are sensitive to the output reactive component. Input adaptability mode 2: It is applicable to the normal power grid and DGs, and input power sources with high internal resistance.	Mode 2	Mode 1, Mode 2

Table 4-14 Output settings

Item	Description	Default Value	Value Range
Zero display with no load output	If this parameter is set to **Enable**, the output current is displayed as 0 when no load is output. The output load rate is displayed as 3%. When this parameter is set to **Disabled**, the output current and output load rate are not adjusted to zero.	Enable	Disable, Enable
Calib. output current if no load	If this parameter is set to **Enable**, the current at no load will be calibrated once automatically. This function can be used only when the UPS carries no load.	Disable	Disable, Enable

 Copyright © Huawei Technologies Co., Ltd.

Item	Description	Default Value	Value Range
Output interruption transfer time (ms)	Set this parameter based on the output interruption time acceptable to loads.	0	0 ms, 40 ms, 60 ms, 80 ms, 100 ms, 120 ms
Max. BPM transfer times	Cross currents occur during the transfer between bypass mode and normal mode, which impacts the system. This parameter specifies the number of transfers between bypass mode and normal mode within 1 hour, which ensures system security.	5	1–10
Current equal. detection	Monitors the current differences between racks or modules. If this parameter is set to **Enable**, the **Mod. Cur. Eql. Data** can be viewed on the running information screen.	Disable	Disable, Enable
Inverter async. alarm	Specifies whether an **Inverter asynchronous** alarm can be displayed on the LCD when the inverter cannot track the bypass frequency change. Normal power supply is not affected no matter whether this parameter is set to **Enable** or **Disable**.	Disable	Disable, Enable

 Copyright © Huawei Technologies Co., Ltd.

Item	Description	Default Value	Value Range
Bus overvoltage recovery	Specifies whether to automatically clear the alarm and restart the power module when the rectifier or inverter shuts down due to a bus overvoltage alarm. If **Bus overvoltage recovery** is set to **Enable**, the bus overvoltage alarm is automatically cleared, and the rectifier and inverter automatically start when the bus voltage recovers (less than 420 V) within **Bus overvolt. recovery time**. When **Bus overvoltage recovery** is set to **Disable**, the bus overvoltage alarm cannot be automatically cleared, and the rectifier and inverter cannot automatically start.	Enable	Disable, Enable
Bus overvolt. recovery time	If **Bus overvoltage recovery** is set to **Enable**, the bus overvoltage alarm is automatically cleared, and the rectifier and inverter automatically start when the bus voltage recovers (less than 420 V) within **Bus overvolt. recovery time**.	5s	5s, 1 min, 5 min, 10 min
Capacitor failure detection	If **Capacitor failure detection** is set to **Enable**, the power module (power unit) performs inverter capacitor fault detection based on the settings of **Capacitor failure detection upper limit** and **Capacitor failure detection lower limit**. If the power module determines that the inverter capacitor is faulty, it shuts down the inverter to prevent the fault from expanding.	Disable	Disable, Enable

 Copyright © Huawei Technologies Co., Ltd.

Table 4-15 Bypass settings

Item	Description	Default Value	Value Range
BPM mode upon BPM overtemp.	Specifies whether to start bypass mode when overtemperature occurs.	Enable	Disable, Enable
Lightload BPM cur. eql. detect	Enable or disable the light load bypass current imbalance alarm. If this parameter is set to **Enable**, the load is light (less than 30% load), and the load rate of a certain rack is less than 10%, the system will generate a bypass current imbalance alarm and cannot enter the ECO mode. If this parameter is set to **Disable**, the preceding detection is not performed. Whether the bypass current is imbalanced does not affect the ECO bypass mode.	Enable	Disable, Enable

Battery System

NOTICE

Battery parameter settings impact battery maintenance, battery lifespan, and UPS discharge time. When you set battery parameters, note the following:

- Retain default settings for **Chg. cur. limiting coef.** and **Cell float voltage**. Only professional maintenance personnel are allowed to change the settings.
- When you set parameters, ensure the following: **Chg. cur. limiting coef.** > **Transfer-to-equalized charging cur. coef**.
- **Single batt. float chg. voltage deviation alarm thres.** and **Single batt. dis. voltage deviation alarm thres.** are used to check whether the batteries in each battery string have the same charge voltage and discharge voltage. When a value exceeds the specified range, an alarm is generated. The calculation formula is (Charge/Discharge voltage – Average voltage)/Average voltage x 100%. The charge/discharge voltage and average voltage are obtained from the BMU. If the BMU is not configured, these two parameters do not need to be set.

 Copyright © Huawei Technologies Co., Ltd.

Item	Description	Default Value	Value Range
Float volt. temp. comp.	If this parameter is set to **Enable**, the float voltage is calibrated based on the battery temperature when a battery temperature sensor is connected. The parameter is configurable in any mode.	Enable	Disable, Enable
Float volt. temp. comp. coef. (mV/(°C·cell))	Calibration coefficient during float voltage temperature compensation.	3.3	0.0–6.0
Float Chg temp. comp. center (°C)	Indicates the reference temperature during temperature compensation of the float charging voltage.	25	20–30
Automatic equalized charging	If this parameter is set to **Enable**, the UPS automatically changes the battery management status to equalized charge based on the charge current and float charge time.	Enable	Disable, Enable
Transfer-to-equalized charging cur. coef. (C10)	The battery enters equalized charge state when the battery current exceeds this parameter value.	0.05	0.02–0.08
SOC to start equalized charging (%)	If the SOC is lower than the specified value, batteries start equalized charging.	70	0–100
Scheduled equalized charging interval (d)	After batteries transfer from equalized charging to float charging, if the batteries do not discharge, equalized charging starts only after the float charging time reaches **Equalized charging protection interval**. After equalized charging is complete, scheduled equalized charging starts when the non-equalized charging time exceeds **Scheduled equalized charging interval**.	60	30–180
Equalized charging protection interval (d)		7	0–15

 Copyright © Huawei Technologies Co., Ltd.

Item	Description	Default Value	Value Range
Forced equalized charging protection time (h)	When batteries are continuously under float charging or hibernation, enable forced equalized charging. When the forced equalized charging time reaches the value of this parameter, batteries automatically transfer to float charging mode.	18	12–24
Max. batt. dis. time (h)	Set the maximum battery discharge time. When the discharge time reaches this value, the UPS powers off. The battery discharge time can be set only to 0 hours or a value only in the range of 16–48 hours. If the time is set to 0 hours, battery discharge protection is not implemented.	24	0–48
Undertemp. alarm thresh. (°C)	Battery temperatures can be monitored in a timely manner. If a battery overtemperature alarm is detected, the charging current limit decreases to 0.03 CA. Battery charging stops if a battery overtemperature protection alarm (when the temperature reaches the high temperature threshold plus 3°C) is generated.	–5°C	–20°C to +5°C
Overtemp. alarm thresh. (°C)		50°C	35°C to 55°C
Single batt. float chg. voltage deviation alarm thres. (%)	**Single batt. float chg. voltage deviation alarm thres. (%)** and **Single batt. dis. voltage deviation alarm thres. (%)** are used to check whether the cells in each battery string have the same charge voltage and discharge voltage. When a value exceeds the specified range, an alarm is generated. The calculation formula is (Charge/Discharge voltage –	10	5–30

 Copyright © Huawei Technologies Co., Ltd.

Item	Description	Default Value	Value Range
Single batt. dis. voltage deviation alarm thres. (%)	Average voltage)/Average voltage x 100%.	20	10–30
Batt. charging capacity mismatch	After this function is enabled, an alarm is generated if the configured battery capacity exceeds the charging capacity of the rack.	Enable	Disable, Enable
Batt. mode shut	In battery mode, the UPS can automatically power off according to the preset shutdown delay time. If the parameter is disabled, this function is not available.	Disable	Disable, Enable
Bat mode shut delay (s)	Shutdown delay in battery mode.	7200	0–7200
Backup time warning	An alarm is generated if this parameter is set to **Enable** and the backup time is less than the warning threshold.	Disable	Disable, Enable
Backup time warning thresh. (min)	Backup time warning threshold.	5	3 to 30
Remain. cap. warning	An alarm is generated if this parameter is set to **Enable** and the remaining capacity is less than the warning threshold.	Disable	Disable, Enable
Remain. cap. warn. thresh. (%)	Remaining capacity warning threshold	20	5–50
Intelligent hibernation	If this parameter is set to **Enable**, the intelligent battery hibernation function is enabled.	Disable	Disable, Enable
Class 1 grid hiber. time (d)	Hibernation time for class 1 power grids.	13	0–30
Class 2 grid hiber. time (d)	Hibernation time for class 2 power grids.	6	0–15

 Copyright © Huawei Technologies Co., Ltd.

Item	Description	Default Value	Value Range
Thres. of low batt. SOC over dry contact (%)	If an output dry contact is set to **Low battery SOC**, and the battery SOC is lower than this threshold, the output dry contact will output signals.	75	5–80
Thres. of low batt. volt. over dry contact (V/cell)	Lead-acid battery: If **Batt. Volt. Below Threshold** is set for an output dry contact and the battery voltage is lower than this threshold, the output dry contact generates a signal.	1.70	1.70–2.10
	Lithium battery: If **Batt. Volt. Below Threshold** is set for an output dry contact and the minimum electrochemical cell voltage is lower than the threshold, the output dry contact generates a signal.	2.80	2.60–3.20

Battery String Summary

Item	Description
No. of iBOX	Number of an iBOX connected to the UPS.
iBAT start No.	Start number of an iBAT connected to the iBOX.
iBAT end No.	End number of an iBAT connected to the iBOX.

4.2.3 Query

On the **Query** page, you can query **Historical Alarm**, **Battery Test Record**s, and **Performance Data**, and perform **Export Data**.

Figure 4-48 Query

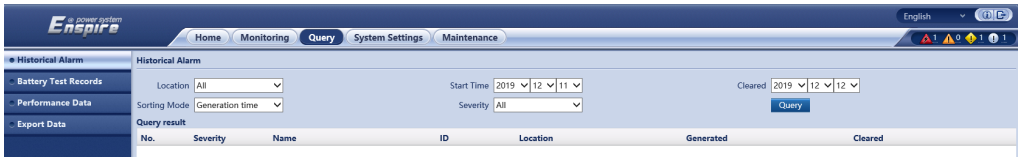

Item	Description
Historical Alarm	View historical alarm information for systems or devices.
Battery Test Records	Query and export **Cap. test logs** and **Common test logs**.
Performance Data	Query the performance data of related components of the system.
Export Data	Export **Historical Alarm**, **Active Alarm**, **Operation Log**, and **Performance Data**.

4.2.4 System Settings

Figure 4-49 System settings (lead-acid battery)

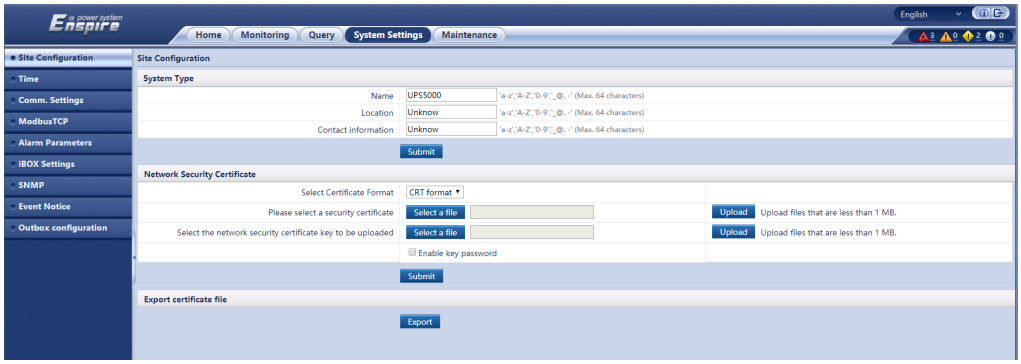

Figure 4-50 System settings (lithium battery)

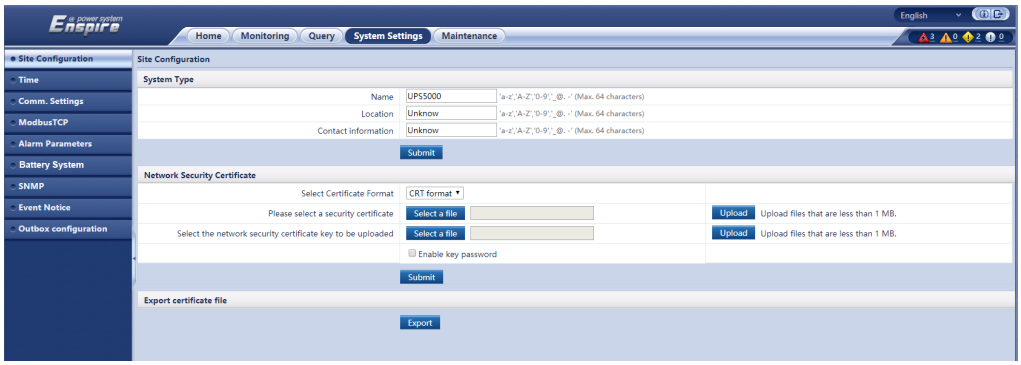

Site Configuration

Table 4-16 System type

Item	Description
Name	Site name.

Item	Description
Location	Site location.
Contact information	Site contact information.

Table 4-17 Network security certificate

Item	Description
Select Certificate Format	**CRT format** and **PFX format** are supported.
Please select a security certificate	Upload a network security certificate.
Select the network security certificate key to be uploaded	Upload the key of the network security certificate.

Export certificate file: Export the root certificate.

System Time

Set the time zone and time for the site.

Comm. Settings

Set **IP Settings**, **RS485 Settings**, **ModbusTCP Settings**, **Amb. T/H Sensor**, **Batt. Temp. Sensor**, **BMU**, and **WIFI Settings**.

ModbusTCP

Table 4-18 Access ModbusTCP security certificate

Item	Description
Upload CA certificate file	Import a CA certificate for the UPS to verify the certificate of the Modbus-TCP communication access party.
Upload local certificate file	Users can replace the UPS certificate with a trusted certificate.
Upload key file	Key file of the certificate.
Key password	Decryption password of the key.
Confirm key password	Confirm the decryption password of the key.

 Copyright © Huawei Technologies Co., Ltd.

Set twice challenge prelim share code: Set the user authentication password between the NetEco and the UPS.

Alarm Parameters

Enable or disable alarm information for components in the system.

iBOX Settings

Set iBOX parameters.

Battery System

Check the SmartLi start address.

SNMP

- The default SNMP version is SNMPv3, and the preset MD5/SHA password is **Changeme1**, and the preset DES/AES password is **Changeme2**. Change the password after your first login, preventing unauthorized access.

  NOTE

  - The standard protocols SNMP V1 and SNMP V2 have security risks. You are advised to use the secure protocol SNMP V3.
  - The standard encryption algorithms MD5 and DES have security risks. You are advised to use the secure encryption algorithms SHA and AES.
- To obtain the Mib file, choose **System Settings** > **SNMP** > **Mib File** > **Export**.
- The **SNMP Trap** is used to set the IP address of a server on which the NMS software is installed. The trap port needs to be the same as that on the NMS. If **SNMP Trap** is incorrectly set or not set, system information will be lost or not reported in time.

Event Notice

- Mailbox Settings: Set the email address of the recipient in **Mailbox Settings**.
- **Alarm Notification**, set **Alarm notification delay** in **Alarm Notification Parameter Settings**, set **Time of the first reminder** and **Interval** in **Alarm Reminder Configuration**, and perform the **Add**, **Modify**, or **Delete** operation on alarm notifications in **Alarm Notification User Settings**.
- After the **Event Notice** information is configured, alarms will be sent to the configured mailbox.

Outbox configuration

Table 4-19 Outbox settings

Item	Description
Address type	**IP address** is supported.

Item	Description
Mailbox server IP address	After the IP address of the outbox server is configured, alarm notification emails will be sent to the configured server.
Encryption mode	**TLS**, **SSL**, and **No encryption** are supported.
SMTP port	The default value is **587**.
Outbox	Outbox address.
User authentication for mailbox server login	After **Enable** is selected, user authentication is required for server login.
User Name	User name for authentication.
Password	Password for authentication.

Mailbox Certificate: Upload the CA certificate file.

4.2.5 Maintenance

On the **Maintenance** page, you can perform **Soft Upgrade** and **User Management**, query **Version Information**, query and export **E-label**, export **Fault Information**, and import and back up **Configuration File**.

Figure 4-51 Maintenance

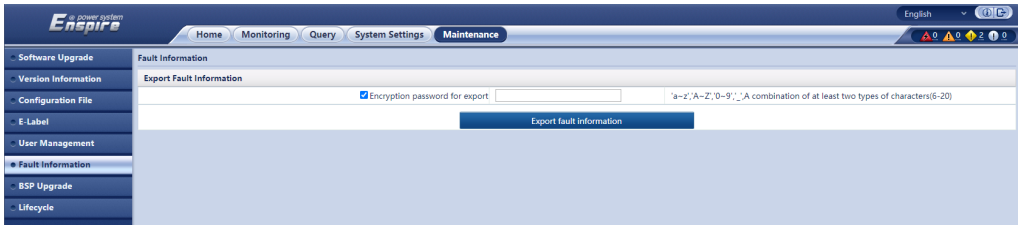

Item	Description
Soft Upgrade	Upgrade the system software version.
Version Information	Query the software and hardware versions of devices in the system.
Configuration File	Import and export system configuration files.
E-label	Query and export E-labels of devices in the system.
User Management	Users can add, modify, delete, lock, and unlock operations, and set passwords.
Fault Information	Export fault information.
BSP Upgrade	Upgrade the BSP version.

Item	Description
Lifecycle	View monitor information such as **First Power-on**, **Arrival Date**, and **Service Life**.

 Copyright © Huawei Technologies Co., Ltd.

5 Operations

5.1 Powering On and Starting the UPS

5.1.1 Powering On the UPS

Prerequisites

Measure the voltage and frequency of the UPS upstream input switch. Voltage range: 138–485 V AC (line voltage); frequency range: 40–70 Hz.

Context

- The following operations are applicable to a single UPS. For parallel systems, contact Huawei technical support.
- Before powering on the UPS, ensure that the UPS has passed all check items in the section "Installation Verification".
- Before powering on the UPS, ensure that all the UPS switches and upstream switch are OFF.

Procedure

Step 1 Close the upstream bypass and mains input switches.

Step 2 (Optional) If a surge protective module is configured, turn on its switch.

Step 3 Close the UPS bypass input switch, mains input switch, and output switch.

After the UPS is powered on, initialization begins. The MDU displays the Huawei logo and an initialization progress bar.

----End

5.1.2 Initial Startup

 Copyright © Huawei Technologies Co., Ltd.

NOTICE

- If the UPS is powered on for the first time, you need to obtain the startup password from the **Service Expert** app. Skip this step if the UPS is not powered on for the first time.
- The **Service Expert** app can be downloaded from **Google Play Store** and can run on Android.
- This document corresponds to the app version V100R001C00SPC111.

5.1.2.1 Obtaining Startup Password

Procedure

Step 1 Download and install the **Service Expert** app.

Step 2 On the app home screen, tap **StartUp** to access the **Set Startup** screen.

- Online Startup
  a. Insert the WiFi module into the USB port on the MDU. Enable the mobile phone WLAN, search for the **UPS_WIFI** signal, and connect to the WiFi signal. The password is **Changeme**.
  b. Set the **Site** and **Device Type** as required, and connect the device. Set **IP** to **192.168.0.10**, **Port** to **443**, **Username** to **admin**, **Password** to **Changeme**, and click **Login**.
  c. After login, tap **Power-on password activation** on the screen. A message is displayed, indicating whether to start the UPS. Tap **OK**.
- Offline Startup
  a. Set **Site** and **Device Type** as required, and tap **Offline Activation**.
  b. Enter **Bar code** and **Verification code** obtained from the LCD on the **Offline Activation** screen. Tap **Generate PWD** to generate a startup password.
  c. Enter the generated password in the password text box on the LCD to start the inverter.

----End

5.1.2.2 Settings Wizard

Procedure

Step 1 Set the language, time, network parameters, system parameters, and battery parameters on the **Settings Wizard** screen.

NOTICE

Set system parameters with caution because the settings determine normal UPS operation.

- Set **Single/Parallel** after double check. Incorrect setting may affect the normal UPS operation.
- **Output voltage level** refers to the line voltage level. Set it based on site requirements.
- Set **Output frequency** correctly; otherwise, loads may be affected and the UPS may not work properly.
- Battery parameter settings are critical to battery maintenance, battery lifespan, and UPS discharge time.

Figure 5-1 Settings Wizard

NOTE

- Set the time and date correctly. Incorrect time and date will cause false fault analysis during maintenance or repair.
- After you set network parameters, connect the UPS to the network over a network cable, which enables you to remotely manage the UPS. If you do not need remote management, retain the default network parameter settings.

Step 2 After you set parameters on the **Settings Wizard** screen, the system displays the **Bypass mode** and **No battery** alarms, which do not need to be handled. If there is any other alarm, you need to rectify the fault.

NOTE

- After you set parameters on the **Settings Wizard** screen, choose **System Info** > **Settings** > **System Setting**. Check that **System Capacity**, **Power module capacity**, **Requisite modules**, and **Redundant modules** match the actual values.
- If dry contact signals are connected to the system, choose **System Info** > **Settings** > **Dry contacts Set** and check that the connected dry contacts have been enabled and that the disconnected dry contacts have been disabled.

Step 3 If the system has connected to the remote EPO switch, you need to choose **Monitoring** > **UPS System** > **Running Parameter** > **System Settings** on the WebUI and set **EPO detection** to **Enable**.

Step 4 View the system running diagram on the MDU to check that the UPS is working in bypass mode.

----End

5.1.3 Starting the Inverter

UPS System User List

Table 5-1 UPS system user list

Default User	Preset Password	
admin (administrator)	LCD	000001
	WebUI	Changeme
operator (common user)	LCD	000001
	WebUI	Changeme

Starting the UPS on the MDU

Step 1 Choose **Common Functions** > **Inv. ON**.

NOTE

You can also start the inverter by choosing **System Info** > **Maintenance** > **Inv. ON**.

Step 2 In the displayed login screen, select a user name and enter the password.

 Copyright © Huawei Technologies Co., Ltd.

Step 3 In the displayed dialog box, tap **Yes** to start the inverter.

----End

Starting the UPS on the WebUI

Step 1 Open a browser (Internet Explorer 11 for example) and choose **Tools** > **Internet Options**.

Step 2 Click the **Advanced** tab, check that **Use TLS 1.0** and **Use TLS 1.1** are selected, and then click **OK**.

Figure 5-2 Setting the Internet options

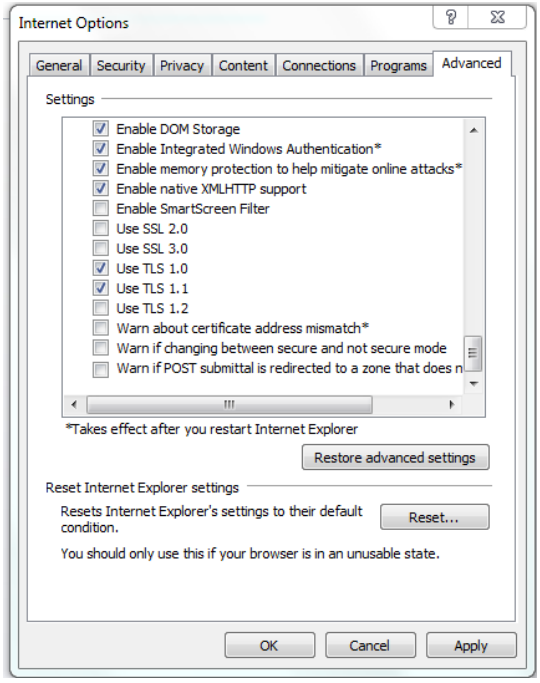

Step 3 In the address box of the browser, enter https://*UPS IP address*.

Step 4 Enter the correct user name and password and click **Login**.

Step 5 On the home page of the WebUI, choose **Monitoring** > **UPS System** > **Running Control**, click **Inv. ON**, and confirm the operation to start the inverter.

Figure 5-3 Starting the inverter

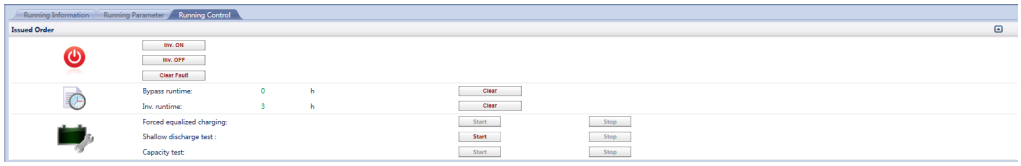

NOTE

If the power module receives a startup command when it cannot be started, the startup command will be kept for 1 minute. If the startup command is not cleared within 1 minute (for example, other faults occur on the module, or you perform shutdown or rectify faults) and the module can be started, the module responds to the startup command.

----End

5.1.4 Powering On Loads

Context

After the inverter starts, the UPS works in normal mode. The **Bypass mode** alarm disappears.

Procedure

Step 1 After confirming that the battery strings are properly connected, close the battery string input circuit breaker. If there are multiple battery strings, close the circuit breaker for each battery string and then the general circuit breaker between battery strings and the UPS. The **No battery** alarm disappears from the MDU.

Step 2 Close the UPS downstream output switch to supply power to the loads.

----End

5.1.5 (Optional) Setting Parameters for the BCB Box

Prerequisites

A BCB box is installed.

Procedure

Step 1 On the **System Info** > **Settings** > **Dry Contact Set** screen, set **MUE05A connection** to **Enable**, and set **BCB connection [OL]** and **Battery breaker [STA]** to **Enable**.

Figure 5-4 BCB connection setting

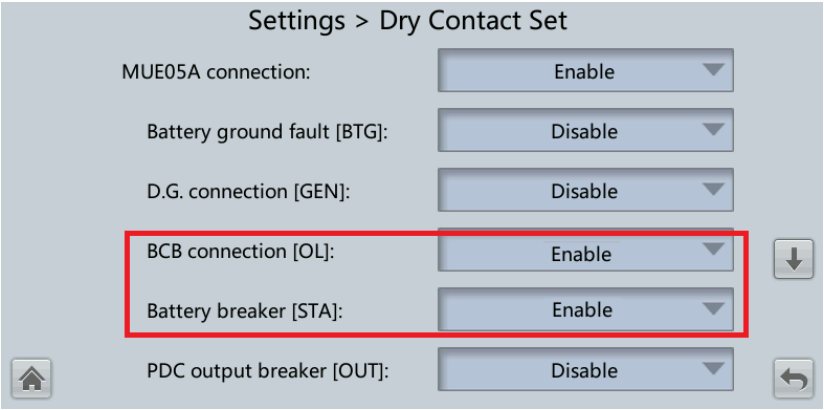

----End

5.2 Shutting Down and Powering Off the UPS

Context

NOTICE

After the inverter is shut down, if the bypass is normal, the UPS transfers to bypass mode; if the bypass is not normal, the UPS supplies no power. Before shutting down the UPS, ensure that all loads have shut down.

Procedure

Step 1 Shut down the inverter.

- On the LCD

  On the LCD main screen, tap **Common Functions**. Tap **Inv. OFF**.

  NOTE

  To shut down the inverter on the **Maintenance** screen, tap **System Info** > **Maintenance**.

  Figure 5-5 Normal bypass

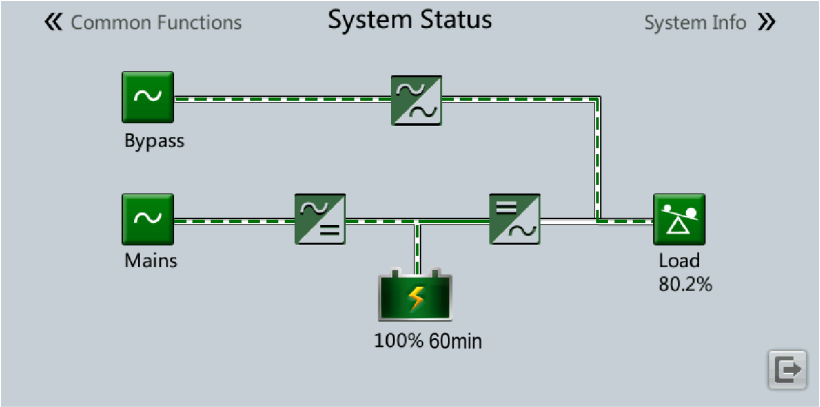

  NOTE

  After you shut down the inverter, the **Bypass mode** alarm is displayed on the LCD.

 Copyright © Huawei Technologies Co., Ltd.

Figure 5-6 Abnormal bypass

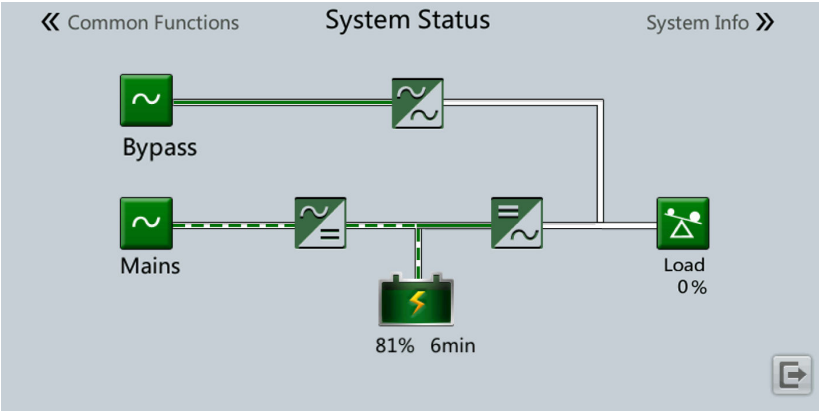

NOTE

If you need to shut down the inverter and transfer the UPS to bypass mode, check that the UPS has not generated an alarm and perform "Step 1".

- On the WebUI

  Choose **Monitoring** > **UPS System** > **Running Control**, and click **Inv. OFF**.

Step 2 After shutting down the inverter, open the output switch, or external output power distribution switch in the UPS output PDC.

Step 3 Open the battery string switch. If there are multiple battery strings, open the general switch between battery strings and the UPS and then the switch for each battery string.

Step 4 Open the external input power distribution switch and the UPS internal switch, perform the following operations:

1. Open the internal mains input switch, bypass input switch, output switch.
2. Open the upstream UPS mains and bypass input switches.

NOTE

- If the inverter needs to shut down to transfer the UPS to bypass mode, check that the UPS has not generated an alarm and perform **Step 1**.
- If you need to shut down the UPS, perform all of the preceding steps.

----End

5.3 Cold-Starting the UPS Using Batteries

Lead-Acid Battery Cold Start

1. Ensure that batteries have been connected properly. Use a multimeter to check that the absolute voltages of positive and negative battery strings are greater than a certain value (single battery voltage x number of batteries in the battery string).
2. Open the upstream mains input and bypass input switches, and close the battery circuit breaker. If there are multiple battery strings, close the circuit

breaker for each battery string and then the general circuit breaker between battery strings and the UPS.

3. Use a multimeter to measure the positive and negative battery string voltages at the UPS battery input terminal. If the absolute values of the voltages are greater than a certain value (single battery voltage x number of batteries in the battery string), the batteries are connected properly.
4. Press and hold down the **BATT START** button on the bypass module for at least 2 seconds. The system automatically enters the battery cold start status. The LCD displays the Huawei logo and an initialization progress bar.
5. After LCD initialization, start the inverter on the LCD.

Lithium Battery Cold Start

1. Check that the cables between the UPS and the lithium battery cabinet are properly connected.
2. Open the upstream mains input and bypass input switches.
3. Power on the lithium battery cabinet. For details, see the user manual for the lithium battery cabinet.
4. Use a multimeter to measure the voltages of the positive and negative battery strings connected to the UPS battery input terminals. If the measured values are consistent with the voltages displayed on the **System Status** screen of the lithium battery cabinet, the batteries are properly connected.
5. Check that the green indicator on the battery control unit in the lithium battery cabinet blinks at 1 Hz or is steady on. Then, press and hold down the BATT START button on the bypass module for at least 2 seconds. The system automatically enters the battery cold start status. The LCD displays the Huawei logo and an initialization progress bar.
6. After LCD initialization, start the inverter on the LCD.

5.4 Transferring to Bypass Mode

NOTICE

Before shutting down the inverter, ensure that the bypass is normal. If the bypass is not normal, after the inverter is shut down, the UPS supplies no power, and the loads shut down.

Shut down the UPS inverter. Shut down the inverter on the LCD or WebUI, and the UPS transfers to bypass mode.

NOTE

If the inverter is shut down when the input voltage or frequency exceeds the specified threshold, the UPS supplies no power, and the loads shut down.

5.5 Setting ECO Mode

 Copyright © Huawei Technologies Co., Ltd.

Prerequisites

The system is working in inverter mode.

Context

- The UPS is set to non-ECO mode by default. Set the UPS to ECO mode when energy saving is required.
- In ECO mode, the bypass takes priority over the inverter in supplying power. If the bypass is disconnected, the UPS transfers to normal mode.
- Both a single UPS and the parallel system support the ECO mode for higher efficiency.
- To avoid frequent transfer between ECO mode and normal mode, do not set the ECO mode when the bypass input is unstable or is sensitive to load changes.
- ECO mode is not recommended when the load is less than 10%.
- Before transferring the UPS to ECO mode, ensure that the bypass module works properly.

Procedure

Step 1 On the LCD, set **System Info** > **Settings** > **System Settings** > **Working mode** to **ECO**. The information indicating that the UPS works in ECO mode is displayed on the LCD.

Step 2 Set the ECO voltage range.

Figure 5-7 ECO parameters

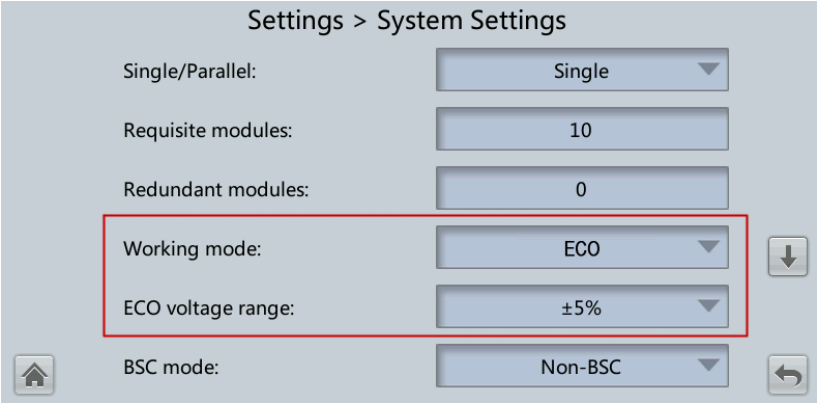

Step 3 (Optional) If you set ECO mode in bypass mode, manually start the UPS inverter.

NOTICE

After the inverter starts, the UPS still works in bypass mode and the inverter is on standby. If the bypass is not normal, the inverter supplies power immediately. If the inverter is not started, the UPS may be disconnected.

 Copyright © Huawei Technologies Co., Ltd.

Figure 5-8 System status in ECO mode

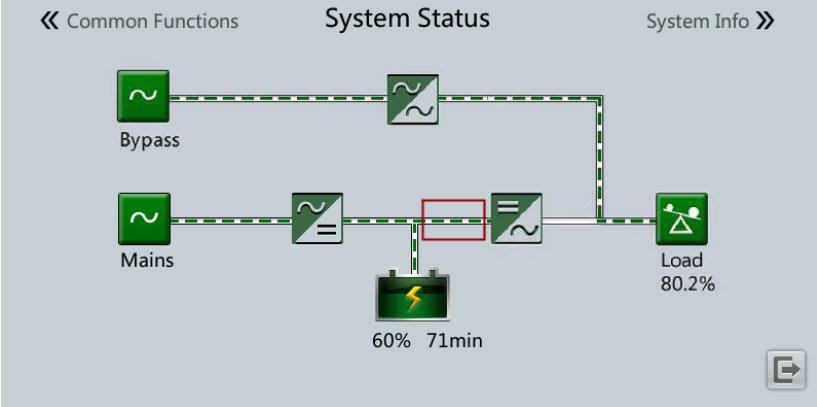

----End

5.6 Testing Batteries

5.6.1 Lead-Acid Battery Test

5.6.1.1 Forced Equalized Charging Test

Context

NOTICE

Before a forced equalized charging test, ensure that:

- The mains input is normal.
- Batteries are properly connected.
- Batteries are not in the equalized charging state.

Procedure

Step 1 On the home screen of the LCD, choose **System Info** > **Maintenance** > **Battery Maint**.

Step 2 Tap **Start** next to **Forced Equalized Charging** to start a forced equalized charging test.

Figure 5-9 Starting a forced equalized charging test

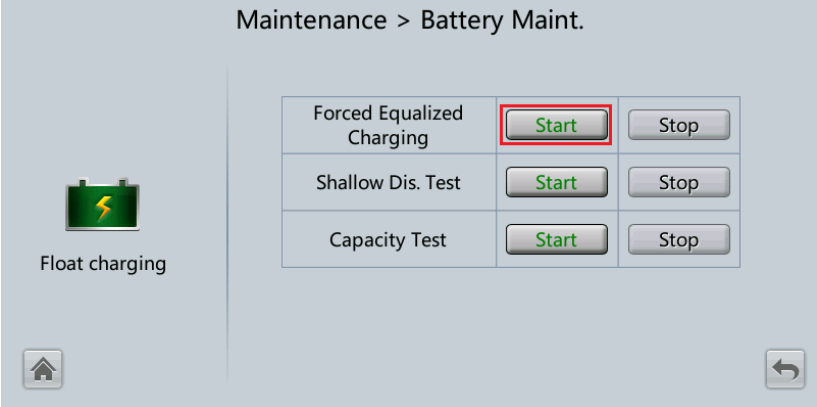

NOTE

The forced equalized charging test automatically stops in any of the following cases:

- The forced equalized charging test duration reaches the forced equalized charging protection time (12–24 h, 18 h by default).
- The UPS generates a battery overtemperature, overvoltage, or overcurrent alarm.
- An alarm is generated.

----End

5.6.1.2 Shallow Discharge Test

NOTICE

Before performing a shallow discharge test, ensure that:

- The UPS works in normal mode with a load ratio fluctuation less than 10%.
- The UPS generates no battery overtemperature, overvoltage, or overcurrent alarm. No generator is connected to the UPS.
- The mains, batteries, charger, and discharger are normal. No overload alarm is generated.

Automatic Shallow Discharge Test

Step 1 On the home screen of the LCD, choose **System Info** > **Settings** > **Battery Settings** and set **Sched. shallow dis. test** to **Enable**.

Step 2 Set **Sched. shallow dis. test time** and **Sched. shallow dis. test interval** as required. After setting is complete, the system will perform automatic shallow discharge tests based on the settings.

----End

Manual Shallow Discharge Test

Step 1 On the home screen of the LCD, choose **System Info** > **Maintenance** > **Battery Maint**.

Step 2 Tap **Start** next to **Shallow Dis. Test** to start a shallow discharge test.

Figure 5-10 Starting a shallow discharge test

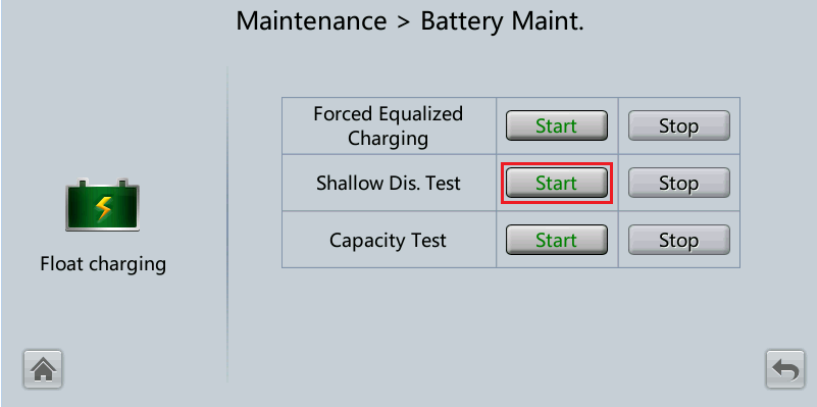

NOTE

When the battery test is complete, the test data is used as common test data. Record the data obtained from the latest five tests.

The shallow discharge test automatically stops in any of the following cases:

- The battery discharge capacity reaches the specified value (10%–50%, 20% by default).
- The discharge voltage reaches the warning threshold (calculated in real time).
- The load ratio fluctuation exceeds 10%.
- An alarm is generated.

----End

5.6.1.3 Capacity Test

Context

NOTICE

Before a capacity test, ensure that:

- The UPS is working in normal mode; float charging or hibernation has lasted for 2 hours after the state of charge (SOC) reaches 100%; and the load ratio fluctuation is less than 10%.
- The UPS has generated no battery overtemperature, overvoltage, or overcurrent alarm. No generator is connected to the UPS.
- The mains, batteries, charger, and discharger are normal. No overload alarm is generated.

Procedure

Step 1 On the home screen of the LCD, choose **System Info** > **Maintenance** > **Battery Maint**.

Step 2 Tap **Start** next to **Capacity Test** to start a capacity test.

Figure 5-11 Starting a capacity test

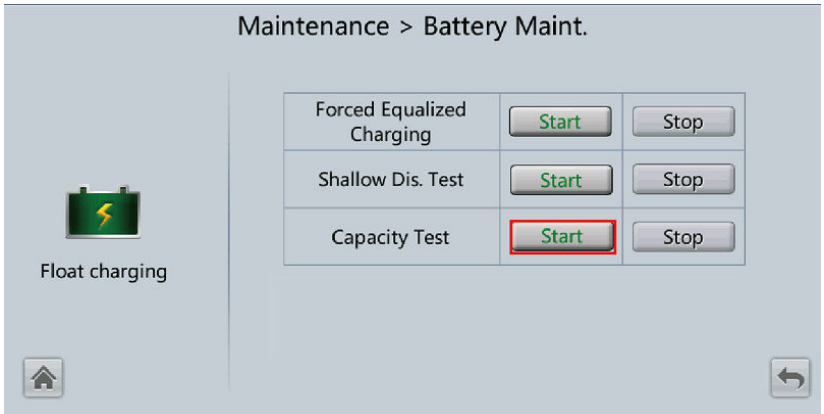

NOTE

The capacity test automatically stops in any of the following cases:

- The battery discharge voltage reaches the end of discharge (EOD) voltage plus 0.01 V.
- The load fluctuation exceeds 10%.
- An alarm is generated.

When the battery discharge voltage reaches the EOD voltage plus 0.01 V, the test is complete. The test data is used as capacity test data. Save the capacity test data record with the largest discharge capacity in a month as the capacity test data for the month. A maximum of recent 36 capacity test records can be saved.

----End

5.6.2 Lithium Battery Test

5.6.2.1 Shallow Discharge Test

NOTICE

Before performing a shallow discharge test, ensure that:

- The UPS is working in normal mode; float charging or hibernation has lasted for 2 hours after the state of charge (SOC) reaches 100%; and the load ratio fluctuation is less than 10%.
- The UPS generates no battery overtemperature, overvoltage, or overcurrent alarm. No generator is connected to the UPS.
- The mains, batteries, charger, and discharger are normal. No overload alarm is generated.
- The SmartLi has generated no alarms related to lithium batteries.

 Copyright © Huawei Technologies Co., Ltd.

Automatic Shallow Discharge Test

1. On the home screen of the UPS LCD, choose **System Info** > **Settings** > **Battery Settings** and set **Sched. shallow dis. test** to **Enable**.
2. Set **Sched. shallow dis. test time** and **Sched. shallow dis. test interval** as required. After setting is complete, the system will perform automatic shallow discharge tests based on the settings.

Manual Shallow Discharge Test

1. On the home screen of the UPS LCD, choose **System Info** > **Maintenance** > **Battery Maint**.
2. Tap **Start** next to **Shallow Dis. Test** to start a shallow discharge test.

Figure 5-12 Starting a shallow discharge test

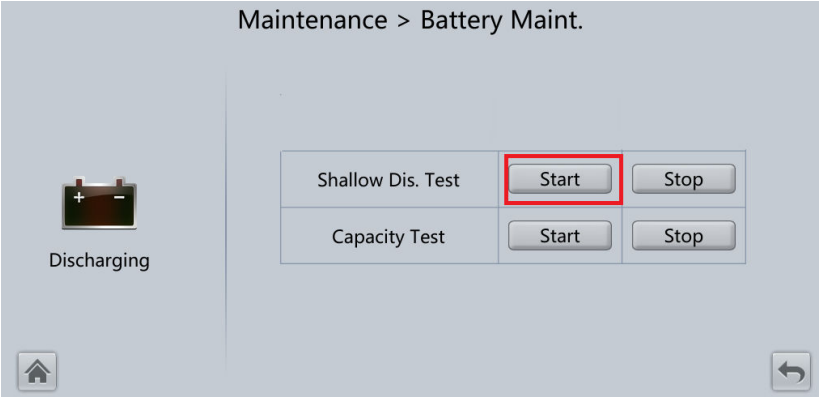

NOTE

When the battery test is complete, the test data is used as common test data. Record the data obtained from the latest five tests.

The shallow discharge test automatically stops in any of the following cases:

- The battery discharge capacity reaches the specified value (10%–50%, 20% by default).
- The discharge voltage reaches the warning threshold (calculated in real time).
- The load ratio fluctuation exceeds 10%.
- An alarm is generated.

5.6.2.2 Capacity Test

Context

NOTICE

Before a capacity test, ensure that:

- The UPS is working in normal mode; float charging or hibernation has lasted for 2 hours after the state of charge (SOC) reaches 100%; and the load ratio fluctuation is less than 10%.
- The UPS has generated no battery overtemperature, overvoltage, or overcurrent alarm. No generator is connected to the UPS.
- The mains, batteries, charger, and discharger are normal. No overload alarm is generated.
- The SmartLi has generated no alarms related to lithium batteries.

Procedure

Step 1 On the home screen of the UPS LCD, choose **System Info** > **Maintenance** > **Battery Maint**.

Step 2 Tap **Start** next to **Capacity Test** to start a capacity test.

Figure 5-13 Starting a capacity test

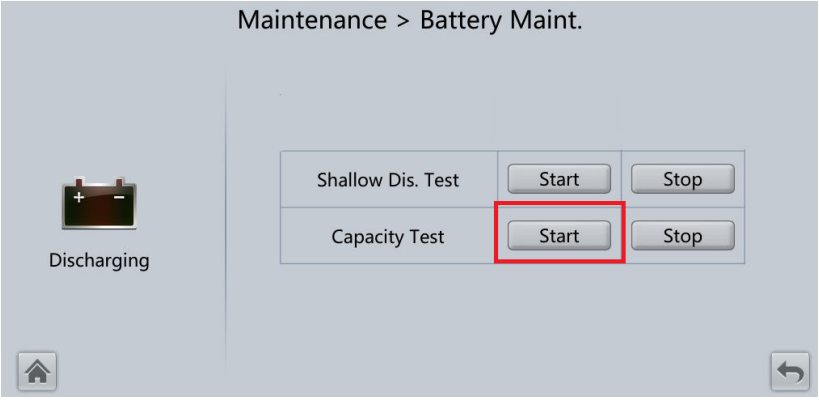

NOTE

The capacity test automatically stops in any of the following cases:

- The minimum cell voltage reaches 2.6 V.
- The load fluctuation exceeds 10%.
- An alarm is generated.

The test is complete when the minimum cell voltage reaches 2.6 V. Data about the most amount of energy discharged is stored once a month for 36 months.

----End

5.6.3 Test Data Download

- Web
  a. On the WebUI, choose **Query** > **Operation Log**, choose logs that need to be queried from the **Log** drop-down list box, and click **Query**.

     Figure 5-14 Operation Log

  b. Choose logs that have been queried from the **Log** drop-down list box, and click **Export**.

5.7 Transferring to Maintenance Bypass Mode

Context

NOTICE

- Strictly observe the following procedure to transfer the UPS to maintenance bypass mode. Otherwise, loads may power off.
- In maintenance bypass mode, the mains supplies power to the loads directly over the maintenance bypass. If the mains is not normal, the loads may power off.

Procedure

Step 1 Manually transfer the UPS to bypass mode.

Step 2 Close the maintenance bypass switch. Then the UPS transfers to maintenance bypass mode.

NOTE

The maintenance bypass switch in the figures below is for reference only. Close the maintenance bypass switch according to site specifications.

The **Maint. breaker closed** alarm is displayed in the alarm list, as shown in **Figure 5-16**.

Figure 5-15 Closing the maintenance bypass switch

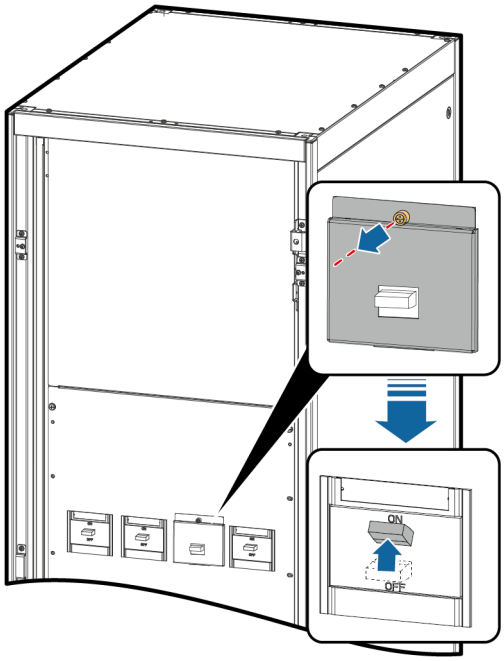

Figure 5-16 Maint. breaker closed alarm

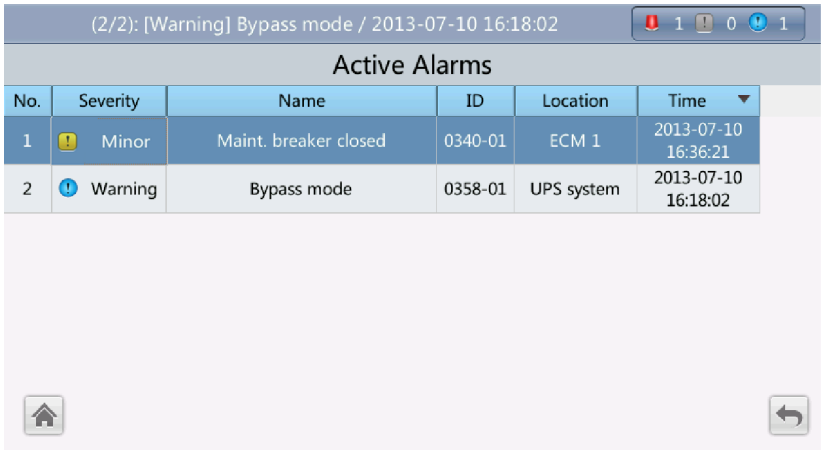

NOTE

After the UPS transfers to maintenance bypass mode, the **Maint. breaker closed** and **Bypass mode** alarms are displayed on the LCD.

----End

5.8 Transferring from Maintenance Bypass Mode to Normal Mode

Context

NOTICE

Before transferring the UPS from maintenance bypass mode to normal mode, ensure that the bypass input and output are normal.

Procedure

Step 1 Open the maintenance bypass switch.

The **Maint. breaker misoperation** and **Maint. Breaker closed** alarms disappear from the alarm list. Check whether the UPS works in bypass mode by viewing the system running status diagram on the LCD or WebUI.

NOTE

If the stopper or barrier of the maintenance bypass switch is configured, reinstall the stopper or barrier on the maintenance bypass switch.

Step 2 Start UPS inverters.

----End

5.9 Performing EPO

NOTICE

- After the EPO button is turned on, the UPS supplies no power and the loads shut down.
- In maintenance bypass mode, the UPS continues to supply power even after the EPO button is turned on.

Press the external EPO switch that connects to the dry contact card or remove the 4-pin terminal on the EPO port of the dry contact card.

Figure 5-17 EPO ports

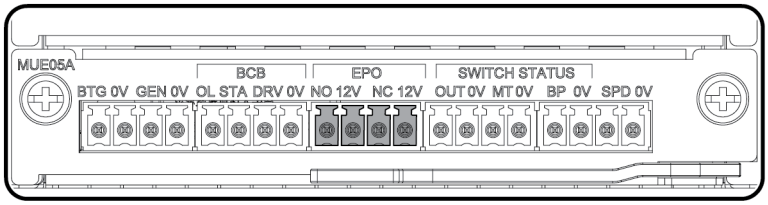

UA10000097

After you press the EPO button, the **EPO** and **No power supplied** alarms are displayed on the LCD.

5.10 Clearing the EPO State

Procedure

Step 1 Clear the EPO state. Ensure that the EPO button connected to the dry contact is not in the EPO state.

Step 2 Clear the EPO alarm.

- On the LCD

  On the LCD, choose **System Info** > **Alarms** and tap **Clear Faults**. In the displayed dialog box, tap **Yes**. The EPO alarm is cleared successfully.

- On the WebUI

  Choose **Monitoring** > **UPS system** > **Running Control > Issued Order** and click **Clear Fault**. The EPO alarm is cleared successfully.

Step 3 Check that the EPO alarm is cleared by viewing active alarms. If the system bypass input is normal, the UPS transfers to bypass mode.

- Viewing active alarms on the LCD

  Choose **System Info** > **Alarms > Active Alarms** to check that the EPO alarm is cleared.

- Viewing active alarms on the WebUI

  Choose **Home** > **Active Alarm** to check that the EPO alarm is cleared.

Step 4 Start the inverter.

----End

5.11 Exporting Data

The following data can be exported:

- Historical Alarm
- Active Alarms
- Performance Data
- Operation Log
- E-Label
- Fault Information

NOTE

This topic describes how to export historical alarms.

Web

1. Choose **Query > Export Data > Export Historical Data**. Set **Encryption Password for Export**, and select **Historical Alarm** from the **Data Type** drop-down list.

   Figure 5-18 Export Historical Data

   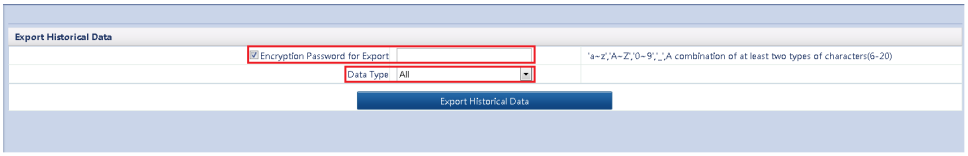

2. Click **Export Historical Data** and save the displayed webpage.

5.12 Setting Hibernation Mode

When the load power is small and stable, you can shut down the inverters in some power modules so that these power modules enter hibernation mode and other power modules bear all the load power. This improves the system efficiency in the case of small load power and increases the power module service life. The hibernation function can be set on the WebUI.

NOTICE

- Ensure that the load power is stable. If the system load power fluctuation is greater than the rated capacity of half a module (for example, the single-phase load power fluctuation is greater than 5 kVA for a 30 kVA module), the UPS may enter and exit from hibernation mode repeatedly.
- Check that the number of redundant power modules and racks are appropriate. If the number is insufficient, the UPS may not enter hibernation mode.

Web

1. On the WebUI, choose **Monitoring** > **UPS System > Running Parameter** > **System Settings** and set **Paral sys hibernate** to **Enable**.
1. Set the module cycle hibernation period to an integer ranging from 1 to 100. The default value is 30.

Figure 5-19 Running Parameter

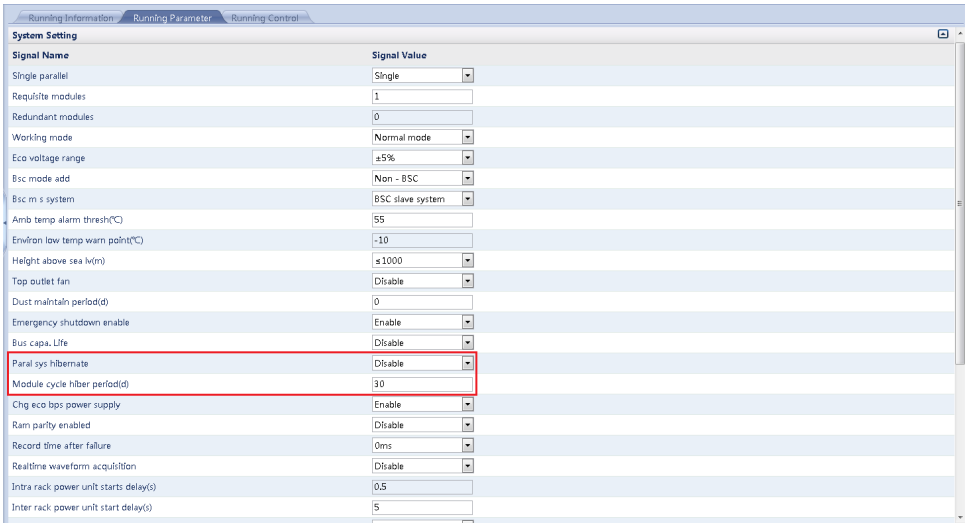

NOTE

Click **Submit** after setting parameters on the WebUI.

6 Routine Maintenance

6.1 UPS Maintenance

NOTICE

- Only trained personnel are allowed to perform maintenance. Before performing operations on the UPS, wear electrostatic discharge (ESD) clothes, ESD gloves, and an ESD wrist strap. Remove conductive objects such as jewelry or watches during operations to avoid electric shocks or burns.
- Use insulated tools when maintaining internal devices. Only trained personnel are allowed to perform maintenance. Customers are not allowed to maintain components behind protective covers that can be removed only using tools. If the components are to be maintained, contact Huawei technical support.
- Only maintenance engineers can maintain power modules and bypass modules.
- Maintain UPSs regularly based on the following requirements. Otherwise, the UPSs may fail to operate properly and the service life may be shortened.

 Copyright © Huawei Technologies Co., Ltd.

6.1.1 Monthly Maintenance

Table 6-1 Monthly maintenance

Check Item	Expected Result	Troubleshooting
Operating environment	• Ambient temperature: 0–40°C • Humidity: 0–95% RH (non-condensing) • Rodent-proof measures have been taken for the equipment room. • The equipment room is airtight.	• If the humidity or temperature is abnormal, check the air conditioner status. • Put rodent-proof baffle plates at the door of the UPS equipment room. • Check that the equipment room is airtight and not in a direct ventilation environment.
Power grid environment	• Input voltage: 380 V AC, 400 V AC, or 415 V AC (line voltage) • Output voltage: 380 V AC, 400 V AC, or 415 V AC (tolerance ± 1%, line voltage) • Frequency: 40–70 Hz	• If the input voltage is abnormal, check the power grid status and input cable connection. • If the output voltage is abnormal, check the UPS running status and check whether an alarm is generated.
Information on the LCD	The status icons on the LCD indicate that all units are operating properly, all operating parameters are within their normal ranges, and no fault or alarm information is displayed.	If an alarm is generated, rectify the fault by checking the device status and parameters.

6.1.2 Quarterly Maintenance

Table 6-2 Quarterly maintenance

Check Item	Expected Result	Troubleshooting
Cleanliness	Wipe the cabinet surface using a white paper and the paper does not turn black.	Remove the dust, especially from the air filter on the front door, or replace the air filter.

 Copyright © Huawei Technologies Co., Ltd.

Check Item	Expected Result	Troubleshooting
Parameter configuration	The configuration of the output voltage grade, frequency, number of batteries, and battery capacity meets requirements.	Reset the parameters.
Status record	Record the three-phase load rate and output power factor.	If an exception occurs, check the load status.
Shallow discharge test (recommended)	Conduct a shallow discharge test when the UPS is backed up to verify that the batteries can discharge normally.	If an alarm is generated, refer to the alarm list.

6.1.3 Annual Maintenance

Table 6-3 Annual maintenance

Check Item	Expected Result	Troubleshooting
Grounding	Check that the ground cables are connected securely.	Tighten the screws.
Power cables and terminals (between the UPS and the power distribution cabinet)	The insulation layer of cables is intact and terminals are free from black marks and noticeable sparks.	• Replace the cables. • Secure the output terminals.
Cables and circuit breaker through-current capacity	The circuit breakers and cables meet load requirements. The actual cable through-current capacity is greater than the circuit breaker specifications.	• Replace the circuit breaker. • Replace the cable.

 Copyright © Huawei Technologies Co., Ltd.

6.2 Battery Maintenance

NOTICE

Before installing batteries, read through the battery user manuals and pay attention to safety precautions and connection methods provided by battery manufacture.

When installing and maintaining batteries, pay attention to the following points:

- Wrap tools with insulation tape to prevent electric shock.
- Protect your eyes with relevant devices and apply other protective measures.
- Wear insulated gloves and a protective coat in case of electrolyte overflow.
- When moving batteries, avoid handling the battery upside down, handle batteries gently, and pay attention to personal safety.
- Keep the battery switch off when installing or maintaining the batteries.

6.2.1 Precautions for Battery Maintenance

- Before battery maintenance, get the tools, such as handles, insulated. Do not place other objects on the top of batteries.
- Never use any organic solvent to clean batteries.
- Never try to remove the safety valve or pour anything into batteries.
- Never smoke or have an open flame around batteries.
- After battery discharge, charge the battery in time to maintain a good service life.
- Only professionals are allowed to perform the maintenance tasks.

6.2.2 Monthly Maintenance

Table 6-4 Monthly maintenance

Item	Expected Result	Troubleshooting
Battery management alarm	No battery management alarm is generated.	Identify the cause of an alarm based on the alarm information.

 Copyright © Huawei Technologies Co., Ltd.

Item	Expected Result	Troubleshooting
Battery appearance	1. The surface is clean and tidy without stains. 2. The battery terminals are intact. 3. Batteries are free from damage and cracks. 4. Batteries are free from acid leakage. 5. Batteries are not deformed or bulged.	If the battery appearance is abnormal, contact Huawei technical support.
Battery operating temperature	1. The ambient battery temperature is 25±5°C. 2. The battery operating temperature is lower than battery temperature +20°C. 3. Battery charge and discharge conditions meet the requirements specified in the battery specifications.	1. Identify the cause of an abnormal battery operating temperature. 2. If the fault persists, contact Huawei technical support.
Charge voltage of battery string	• Equalized charging voltage: (2.35 V/cell ±1%) x Single battery voltage/2 x Number of batteries in a battery string • Float charging voltage: (2.25 V/cell ±1%) x Single battery voltage/2 x Number of batteries in a battery string	1. If the voltage drop between the battery string output terminals and the battery input terminals at the UPS side is greater than 1% of the battery string voltage, check whether the cable between the battery string and the UPS is excessively long, or the cable diameter is excessively small. 2. Check whether the equalized charging voltage and float charging voltage are correctly set for the UPS. 3. If the fault persists, contact Huawei technical support.

 Copyright © Huawei Technologies Co., Ltd.

6.2.3 Quarterly Maintenance

Table 6-5 Quarterly maintenance

Item	Expected Result	Troubleshooting
Battery temperature sensor measurement accuracy	The difference between the temperature measured by the temperature sensor and the temperature displayed on the MDU is less than 3°C.	1. Install the temperature sensor in the correct position. 2. Replace the battery temperature sensor.
Battery management parameter settings	The settings of battery management parameters meet the requirements in the user manual.	Set parameters correctly.
Tightness of battery screws	The location of the signs marked on battery terminals indicating tight connections does not change.	Take photos from multiple angles and contact Huawei technical support.
Cables between batteries	No cable deteriorates and the insulation layer does not crack.	Replace the faulty cable.
Battery voltage	• Equalized charging voltage: 2.35 V/cell ±0.02 V/cell • Float charging voltage: 2.25 V/cell ±0.02 V/cell	1. Check whether the equalized charging voltage and float charging voltage of a battery are normal. 2. If the charging voltage of a battery exceeds the specifications requirement, perform a complete forcible equalized charging for the battery, and check again whether the voltage is normal. 3. If the fault persists, contact Huawei technical support.

 Copyright © Huawei Technologies Co., Ltd.

Item	Expected Result	Troubleshooting
Shallow discharge test (recommended)	Conduct a shallow discharge test when the UPS is backed up to verify that the batteries can discharge normally.	1. If the batteries cannot discharge normally, locate the fault (for abnormal alarms, see the alarm list). 2. If the fault persists, contact Huawei technical support.

6.2.4 Annual Maintenance

Table 6-6 Annual maintenance

Item	Expected Result	Troubleshooting
Capacity Test	When the UPS is backed up, discharge a battery to the undervoltage alarm threshold, to refresh the capacity of the battery.	1. Locate the cause when an exception is identified. 2. If the fault persists, contact Huawei technical support.
Battery connection reliability	1. Each battery terminal is connected reliably. (When battery strings are powered off, check the reliability of each terminal in the order from positive terminals to negative terminals.) 2. The tightening torque of each battery screw meets the requirements of the battery manufacturer. (A torque wrench is used for checking the torque. After checking that the battery screws meet the requirements, mark the screws for later check.)	1. Rectify any abnormal connection. 2. If the fault persists, contact Huawei technical support.

 Copyright © Huawei Technologies Co., Ltd.

7 Troubleshooting

CAUTION

- If the UPS is faulty, alarm information is displayed on the LCD. Clear critical alarms before powering on the UPS again. Otherwise, the fault scope expands or the UPS is damaged.
- Do not clear alarms by reseating modules.
- Remove a faulty module after it is confirmed that the module needs replacing. After removing the module, do not insert it into the UPS again.

NOTICE

- After a UPS finishes troubleshooting and is started, if the LCD continues displaying alarm information, choose **System Info** > **Alarms** > **Clear Faults** to clear the alarm and then start the inverter.
- When batteries reach EOD, the battery switch in the BCB box trips if the BCB box is configured. To restore battery discharge, close the battery switch in the BCB box (if any) first.
- To restore battery discharge after batteries reach EOD, use one of the following methods: 1. Switch to another battery string. Ensure that each battery has a voltage greater than the EOD voltage and 11.3 V/cell. 2. Restore the mains power supply to start the inverter. Close the battery switch and charge batteries until each battery has a voltage greater than the EOD voltage and 11.3 V/cell.

For details about how to rectify common faults, see **Table 7-1**. If any unmentioned faults occur, see the alarm list chapter, or contact Huawei technical support.

 Copyright © Huawei Technologies Co., Ltd.

Table 7-1 Troubleshooting

Case	Symptom	Possible Cause	Measure
The rectifier is not normal.	The rectifier is not working, and the bus voltage is not boosted.	The mains voltage exceeds the upper threshold 280 V or is less than the lower threshold 80 V.	Check whether the mains voltage exceeds the threshold. If yes, contact the electric power company.
		PFC soft-startup fails.	Replace the power module.
		The power module is faulty.	Replace the power module.
The inverter is not normal.	The buzzer is activated, the Fault indicator is on, the inverter is faulty, and the UPS transfers to bypass mode.	The UPS is overloaded or short-circuited.	Reduce load or rectify short circuits.
		The power module is faulty.	Replace the power module.
The charger generates an alarm.	The buzzer is activated, the Fault indicator is on, and the charging function fails.	The charger fails.	Replace the power module.
		The charger experiences overcurrent.	Replace the power module.
		The charger experiences undervoltage.	Check whether the configured number of batteries is correct. If the value is correct but the alarm persists, replace the power module.
The UPS works in bypass mode and does not transfer to inverter mode.	When the mains is normal, the UPS works in bypass mode and does not transfer to inverter mode.	Set the UPS working mode to ECO mode.	Set the working mode correctly.
		The bypass transfer times reach the upper threshold.	On the LCD, choose **Clear Faults**.
The bypass is not normal.	The buzzer is activated, and the Fault indicator is on.	The bypass thyristor is damaged.	Replace the bypass module.

 Copyright © Huawei Technologies Co., Ltd.

Case	Symptom	Possible Cause	Measure
		The bypass module experiences overtemperature.	Reduce the load, or improve ventilation.

NOTE

For details about component replacement and maintenance involved in Troubleshooting and Alarm List, consult Huawei maintenance engineers.

 Copyright © Huawei Technologies Co., Ltd.

8 Technical Specifications

8.1 Physical Features

Item	Specifications
Cable routing mode	• Top cable routing • Bottom cable routing (cable entry cabinet required)
Protection level	IP20
Dimensions (H x W x D)	2000 mm x 600 mm x 850 mm (not packaged) 2050 mm x 700 mm x 1200 mm (packaged)
Product weight (net weight)	Without redundant modules: • 30kVA: 250 kg • 60 kVA: 270 kg • 90 kVA: 290 kg • 120 kVA: 310 kg

8.2 Internal Switch Parameters

Switch	Specifications
Maintenance bypass switch	690 V AC/250 A/3P
Mains input switch	690 V AC/250 A/3P
Bypass input switch	690 V AC/250 A/3P
Output switch	690 V AC/250 A/3P

 Copyright © Huawei Technologies Co., Ltd.

8.3 Environmental Specifications

Item	Specifications
Operating temperature	0°C to 40°C
Storage temperature	–40°C to +70°C
Humidity	0–95% RH (non-condensing)
Altitude	0–1000 m When the altitude is greater than 1000 m and less than 4000 m, the rated power should be derated. For details, see the IEC62040-3.

8.4 Safety Regulations and EMC

Item	Specifications	
Safety regulations	CE	EN62040-1
	CB	IEC62040-1
	TLC	YD/T2165-2010
EMC	Conducted emission	EN/IEC62040-2
	Radiated emission (RE)	EN/IEC62040-2
	Low-frequency signal interference	IEC61000-2-2
	Electrostatic discharge immunity	IEC61000-4-2
	Conducted susceptibility	EN/IEC62040-2 EN/IEC61000-4-6
	Radiated susceptibility	EN/IEC62040-2 EN/IEC61000-4-3
	Electrical fast transient (EFT)	EN/IEC62040-2 IEC61000-4-4
	Surge protection	EN/IEC62040-2 IEC61000-4-5

 Copyright © Huawei Technologies Co., Ltd.

Item	Specifications	
	Power frequency magnetic field	IEC61000-4-8
	Voltage sag and short time interruption	IEC61000-4-11

8.5 Mains Input Electrical Specifications

Item	Specifications
Input system	Three-phase, four-wire, and PE
Rated input voltage	380 V AC/400 V AC/415 V AC (line voltage)
Input voltage range	80–280 V AC (phase voltage) ● At 30–40°C: The UPS works at full load when the voltage is 187–280 V AC and is derated to 40% load when the voltage is 187–80 V AC. ● At 0–30°C: The UPS works at full load when the voltage is 176–280 V AC and is derated to 40% load when the voltage is 176–80 V AC.
Rated frequency	50 Hz / 60 Hz
Input frequency range	40–70 Hz
Input power factor	● > 0.99 (full load) ● > 0.98 (half load)
THDi	● ≤ 3% (linear load) ● ≤ 5% (non-linear load)

8.6 Bypass Input Electrical Specifications

NOTICE

The UPS supports the SmartLi. For details about the parameters, see the SmartLi user manual.

Item	Specifications
Rated input voltage	380 V AC, 400 V AC, or 415 V AC (line voltage)

 Copyright © Huawei Technologies Co., Ltd.

Item	Specifications
Input voltage range	Upper threshold: +10%, +15% (default), +20%, +25% (when the voltage system is 380 V AC) Upper threshold: +10%, +15% (default), +20% (when the voltage system is 400 V AC) Upper threshold: +10% (default), +15% (when the voltage system is 415 V AC) Lower threshold: –10%, –15%, –20% (default), –30%, –40%, –50%, –60%
Input system	Three-phase, four-wire, and PE
Rated frequency	50 Hz / 60 Hz
Frequency range	50/60 Hz ±6 Hz (adjustable, 0.5–6 Hz, ±2 Hz by default)
Input mode	The mains input and bypass input share a power source or use different power sources

8.7 Battery Electrical Specifications

Item	Specifications
Number of batteries (VRLA battery)	The UPS supports 30–44 batteries (40 by default). 34 batteries, the output power is derated to 94%. 32 and 30 batteries, the output power is derated to 80%.
Cold start	In the case of a mains failure, batteries can start the UPS to power loads.
Charger output power	(6250 W±200 W) x N. The maximum charge power of a power module is 6250 W±200 W (the maximum current is 10 A). N represents the number of power modules in the rack.
Charge voltage (VRLA battery)	• Equalized charging voltage: 2.3–2.4 V/cell, 2.35 V/cell by default (30–42 batteries); 2.3–2.35 V/cell, 2.35 V/cell by default (44 batteries) • Float voltage: 2.23–2.3 V/cell, default: 2.25 V/cell (30–44 batteries)

 Copyright © Huawei Technologies Co., Ltd.

8.8 Output Electrical Specifications

Item	Specifications
Output system	Three-phase, four-wire, and PE
Voltage	380 V AC, 400 V AC, or 415 V AC (tolerance ±1%) (line voltage)
THDv	● THDv ≤ 1% (full linear load) ● THDv ≤ 3% (full non-linear load)
Output PF	1
Transfer time	● 0 ms (uninterruptible transfer) ● ≤ 20 ms (interruptible transfer)
Output voltage unbalance	Voltage unbalance: ±3%, phase unbalance: 120±2°

 Copyright © Huawei Technologies Co., Ltd.

Item	Specifications
Overload capability	Inverter overload capability: At 0–30°C ● 100% < load ≤ 110%: after 60 minutes, transfer to bypass mode if the bypass is normal or disconnect output if the bypass is abnormal. ● 110% < load ≤ 125%: after 10 minutes, transfer to bypass mode if the bypass is normal or disconnect output if the bypass is abnormal. ● 125% < load ≤ 150%: after 1 minute, transfer to bypass mode if the bypass is normal or disconnect output if the bypass is abnormal. ● Load > 150% or in case of shout circuit, the inverter can work for 200 ms. At 30–40°C ● 100% < load ≤ 110%: after 60 minutes, transfer to bypass mode if the bypass is normal or disconnect output if the bypass is abnormal. ● 110% < load ≤ 125%: after 3 minutes, transfer to bypass mode if the bypass is normal or disconnect output if the bypass is abnormal. ● 125% < load ≤ 150%: after 30 second, transfer to bypass mode if the bypass is normal or disconnect output if the bypass is abnormal. ● Load > 150% or in case of shout circuit, the inverter can work for 200 ms.

8.9 System Electrical Specifications

Item	Specifications
Power distribution system	TT, TN-C, TN-S and TN-C-S
ECO in a parallel system	Supported

 Copyright © Huawei Technologies Co., Ltd.

A (Optional) TN-C System Application

If the TN-C system is adopted, short-circuit the input N and PE. The recommended cross-sectional area for the cable is 50 mm^2.

NOTE

The following cable connections are for reference only.

Figure A-1 Connecting the input N and PE

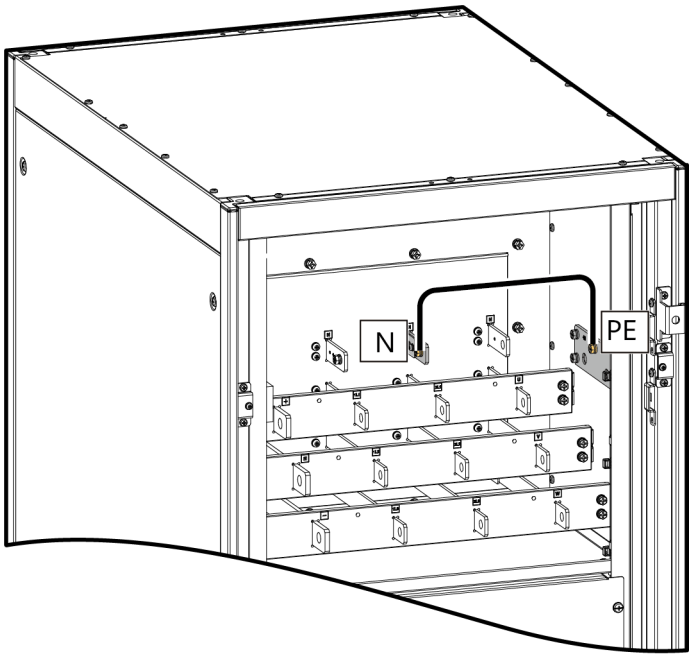

 Copyright © Huawei Technologies Co., Ltd.

B Alarm List

NOTE

This table lists only common alarms. For more information, contact Huawei technical support.

Alarm ID (Alarm ID-Cause ID)	Alarm Name	Severity	Cause	Solution
0001-1	Mains voltage abnormal	Minor	• Cable connections are incorrect. • The mains is not normal. • The power module is faulty. • The output or battery is incorrectly grounded.	1. Check whether cables to mains are disconnected, loose, or incorrectly connected. 2. If cable connections are correct, measure the mains voltage with a multimeter. If the mains voltage exceeds 280 V, the mains input is not normal; if the mains voltage is less than 272 V, the sampling circuit of the power module is not normal. Replace the faulty module. 3. Check whether the output or battery is incorrectly grounded.

 Copyright © Huawei Technologies Co., Ltd.

Alarm ID (Alarm ID-Cause ID)	Alarm Name	Severity	Cause	Solution
0001-2			• Cable connections are incorrect. • The mains is not normal. • The mains input fuse for the power module is blown.	1. Check whether cables to mains are disconnected, loose, or incorrectly connected. 2. If cable connections are correct, measure the mains voltage with a multimeter. If the mains voltage is less than 80 V, the mains voltage is not normal; if the mains voltage exceeds 88 V, the power module sampling circuit or fuse may not be working properly. Replace the faulty module.
0001-3			The mains is not normal.	Check the mains.
0004-1	Mains ph. Reversed	Minor	Cable connections are incorrect.	Verify the cable connections.
0005-1	Mains neutral absent	Minor	Cable connections are incorrect.	1. Secure or connect the neutral wire to the cabinet if it is loose or disconnected. 2. Check that the neutral wire to the power distribution system is normal.
0006-1	Mains undervoltage	Minor	• The mains is not normal. • The power module sampling circuit is not normal.	Check whether the mains voltage ranges from 80 V (excluding 80 V) to 176 V. If no, the mains monitoring circuit for the power module is faulty. Replace the faulty module.
0010-1	Abnormal bypass voltage	Minor	• The bypass voltage range is not correctly set. • The bypass input voltage is not normal.	1. Check the bypass input voltage or cable connections with a multimeter. 2. Check the voltage system and bypass voltage thresholds configured on the LCD.

 Copyright © Huawei Technologies Co., Ltd.

Alarm ID (Alarm ID-Cause ID)	Alarm Name	Severity	Cause	Solution
0010-2			• The bypass frequency range is not correctly set. • The bypass input frequency is not normal.	1. Check the bypass input voltage or cable connections with a multimeter. 2. Check the bypass input frequency. Check the rated frequency and frequency range configured on the LCD.
0011-1	Bypass phase reversed	Minor	The phase sequence of the three-phase bypass input is reversed.	Check whether the cable phase sequence is correct using a multimeter. If no multimeter is available, exchange the positions of any two cables.
0012-1	Bypass neutral absent	Minor	The neutral wire of bypass input is not installed properly.	1. Secure or connect the neutral wire to the cabinet if it is loose or disconnected. 2. Check that the neutral wire to the power distribution system is normal.
0020-1	Battery connected reversely	Critical	Batteries are not properly installed.	1. Check whether battery polarities are correctly installed by using a multimeter. If no, correct the installation. 2. Check whether the battery input voltage of the UPS is normal. If yes, the battery sampling circuit of the power module is faulty. Replace the power module.
0021-1	Battery EOD	Critical	The battery voltage reaches the EOD voltage threshold due to continuous discharge.	If the BCB box is configured, check whether the BCB box trips. If it trips, close the BCB box switch.

 Copyright © Huawei Technologies Co., Ltd.

Alarm ID (Alarm ID-Cause ID)	Alarm Name	Severity	Cause	Solution
0022-1	No battery	Minor	• There is no battery string. • The battery string is not properly installed. • The power module battery fuse is blown.	1. Check that battery cables are correctly connected. 2. Check that the battery terminal voltage is normal. 3. Check that the battery fuse in the power module is intact.
0025-1	Battery overvoltage	Minor	• The configured number of batteries is less than the actual number. • The battery neutral wire is not installed properly.	1. Check whether battery parameters are correctly set. 2. If they are correctly set, certain batteries may be faulty. 3. Check whether the battery neutral wire is correctly connected.
0026-1	Low battery voltage	Minor	• Battery discharge results in low battery voltage. • The battery neutral wire is not installed properly. • The charger is faulty.	1. If the low battery voltage alarm is generated in battery mode, check whether the mains voltage recovers. If yes, charge batteries immediately. 2. Check whether the battery neutral wire is correctly connected. 3. If this alarm is generated in normal mode, check whether the battery switch is ON. If yes, the charger may be faulty. Replace the related power module.

 Copyright © Huawei Technologies Co., Ltd.

Alarm ID (Alarm ID-Cause ID)	Alarm Name	Severity	Cause	Solution
0530-1	Battery ground fault	Critical	• The battery string is not properly grounded. • The battery ground monitoring cable is faulty. • The dry contact board is faulty.	1. Check whether the positive and negative terminals of the battery string are grounded or have sufficient resistance to the ground. 2. Check whether the battery grounding failure detector is faulty by replacing it with a new one. 3. If no battery grounding failure detector is available, check on the dry contact board whether the battery grounding failure detector is enabled. If yes, disable it and check whether the alarm is cleared. If the alarm persists, the dry contact board may be faulty. Replace the board.
0032-1	Battery overvoltage protection	Critical	• The battery voltage is greater than the upper threshold. • The configured number of batteries is less than the actual number. • The actual number of batteries does not meet requirements.	1. Check the battery voltage. 2. Check that the configured number of batteries matches the actual number. 3. Check that the actual number of batteries meets requirements.
0036-2	Battery maintenance reminder	Warning	The time for maintenance arrives.	Maintain the batteries.

 Copyright © Huawei Technologies Co., Ltd.

Alarm ID (Alarm ID-Cause ID)	Alarm Name	Severity	Cause	Solution
0037-1	Battery undervoltage	Critical	• The UPS has worked in battery mode for an extended amount of time. • The charger is faulty.	1. Check whether the battery voltage is normal. 2. Check whether the output is overloaded. 3. Check whether any battery is damaged. If yes, replace the battery. 4. Check whether any battery charger generates an alarm. If yes, replace the faulty module.
0040-7	Rectifier abnormal	Critical	• The fan for the power module is not functioning properly. • The air channel for the power module is obstructed.	1. Check that the air channel for the module is free from blockage. 2. Check whether the fans are functioning properly. Replace the power module if the fans are faulty.
0043-1	Fan abnormal	Critical	• The fan for the power module is abnormal. • The fan monitoring cable for the power module is not working properly.	Replace the faulty power module.
0043-2			The fan is faulty.	Check the fan or replace the bypass module.
0043-3			• The fan is faulty. • The fan monitoring cable is faulty.	1. Replace the fan. 2. Check the fan monitoring cable.
0043-4				
0047-1	Not ready	Critical	The ready switch is OFF.	Close the ready switch.

 Copyright © Huawei Technologies Co., Ltd.

Alarm ID (Alarm ID-Cause ID)	Alarm Name	Severity	Cause	Solution
0060-4	Inverter abnormal	Critical	• A load short-circuit occurs. • A short circuit occurs inside the module. (This fault seldom occurs.) • The output is incorrectly grounded.	1. Check load cable distributions. 2. Check whether the output is grounded. 3. If the load cable connections are normal and the output is correctly grounded, replace the power unit or module.
0061-2	Inverter alarm	Minor	• The I2C bus is not normal. • The E2PROM is faulty.	1. Rectify the fault and check whether the alarm is cleared. 2. If the alarm is generated again, replace the power module.
0061-7	Inverter alarm	Minor	The bypass waveform is not normal.	• If not all modules generate the alarm, start the UPS, transfer it to normal mode, and replace the faulty module. • If all modules generate the alarm, open the bypass input circuit breaker. After the inverter relay is closed, close the bypass input circuit breaker 10 seconds later.

 Copyright © Huawei Technologies Co., Ltd.

Alarm ID (Alarm ID-Cause ID)	Alarm Name	Severity	Cause	Solution
0564-1	Overload timeout	Critical	• The load is excessive. • Derating reduces the rated system power. • The module is damaged. • The output is incorrectly grounded. • The peak load current is too high.	1. Check that there is no overload. 2. Check that the module power is not derated due to a fan fault. 3. Check whether the power grid has a large asymmetric load. 4. Check whether the output is grounded. 5. Check whether the peak load ratio exceeds the upper limit. 6. If the alarm persists, replace the power module.
0565-1	Load impact transfer-to-bypass	Minor	• A large-power RCD load is instantly connected, or the output load short-circuits. • The inverter bridge short-circuits.	1. Check the load. 2. If the load is normal, replace the power module.
0566-1	Output overload	Minor	• The load is excessive. • Derating reduces the rated system power. • The module is damaged.	1. Check that there is no overload. 2. Check that the module power is not derated due to a fan fault. 3. If the alarm persists, replace the power module.

 Copyright © Huawei Technologies Co., Ltd.

Alarm ID (Alarm ID-Cause ID)	Alarm Name	Severity	Cause	Solution
0570-4	BPM module abnormal	Critical	• The bypass fan is not functioning properly, or the air channel is blocked. • The ambient temperature exceeds the upper threshold. • The load is excessive.	1. Check the bypass fan and air channel. If the fan is faulty, replace it. 2. Check that the ambient temperature has not exceeded 40°C. 3. Check that there is no overload.
0583-1	Inter-rack par. cable abnormal	Critical	• The inter-rack parallel system CAN bus is disconnected or short-circuited. • Only one rack works in a parallel system. • An ECM is faulty.	1. Check the inter-rack parallel system CAN bus. 2. Rectify the disconnection or short-circuit fault. 3. Replace the ECM.
0583-4			The inter-rack industrial frequency synchronization cable is broken.	Replace the inter-rack parallel cable.
0583-5			The inter-rack carrier synchronization cable is broken.	
0583-6			• The intra-rack INVBYP cable is broken. • The parallel CAN bus is broken.	
0584-2	Inter-rack par. cable alarm	Minor	The inter-rack parallel cable is faulty.	Replace the inter-rack parallel cable.

 Copyright © Huawei Technologies Co., Ltd.

Alarm ID (Alarm ID-Cause ID)	Alarm Name	Severity	Cause	Solution
0584-4			The inter-rack industrial frequency synchronization cable is broken.	
0085-1	EPO	Critical	The EPO button is pressed.	Restore the EPO button status. Start the UPS after the alarm is cleared.
0086-1	Max. number of BPM transfers	Minor	The system frequently transfers to bypass mode due to overload timeout or load impact.	Check the load.
0087-1	System transfer-to-bypass	Warning	The neighboring UPS is not normal, and transfers to bypass mode.	Check the reason why the neighboring UPS transfers to bypass mode.
0088-1	Rack address conflict	Critical	The configured rack address conflicts with another one.	Check the rack address setting.
0089-1	Rack output overload	Minor	• The load is excessive. • The rack capacity setting is not appropriate.	• Check the load and remove some loads or expand the UPS power capacity if the UPS is overloaded. • Check that the configured rack capacity meets requirements.
0090-1	Dry contact board fault	Critical	I2C communication with the dry contact board MUE05A fails.	Replace the dry contact board MUE05A.
0090-2			I2C communication with the dry contact board MUE06A fails.	Replace the dry contact board MUE06A.

 Copyright © Huawei Technologies Co., Ltd.

Alarm ID (Alarm ID-Cause ID)	Alarm Name	Severity	Cause	Solution
0356	Battery Mode	Minor	The UPS is working in battery mode.	The running status is displayed. See details about how to handle other alarms.
0359	No power supplied	Warning	No power is supplied.	The running status is displayed. See details about how to handle other alarms.
0332	Output disabled	Minor	The output is disabled.	The running status is displayed. See details about how to handle other alarms.
0337	PDC bypass input breaker open	Critical	The bypass input circuit breaker on the PDC is OFF.	The running status is displayed. No further measures are required.
0338	PDC output breaker open	Critical	The output circuit breaker on the PDC is OFF.	1. Check that all UPS output circuit breakers are ON. 2. On the LCD, check that **PDC output breaker open** alarm has disappeared. If the alarm persists, tap the **Clear Fault** button to clear the alarm.
0341	PDC Maint. breaker closed	Minor	The maintenance circuit breaker on the PDC is ON.	The running status is displayed. No further measures are required.
0342	Mains input breaker open	Critical	The mains input circuit breaker is OFF.	The running status is displayed. No further measures are required.
0343	BPM input breaker open	Critical	The bypass input circuit breaker is OFF.	The running status is displayed. No further measures are required.
0340	Maint. breaker closed	Minor	The maintenance circuit breaker is ON.	The running status is displayed. No further measures are required.
0335	Generator connected	Warning	The generator is connected.	The running status is displayed. No further measures are required.

 Copyright © Huawei Technologies Co., Ltd.

Alarm ID (Alarm ID-Cause ID)	Alarm Name	Severity	Cause	Solution
0594-1	Insufficient redundant racks	Minor	• The load is excessive. • The configured number of redundant racks is incorrect.	1. Reduce the load. 2. Decrease the configured number of redundant racks.
0095-1	Insuffi. redundancy	Minor	• The load is excessive. • The configured number of redundant modules is incorrect.	1. Reduce the load. 2. Decrease the configured number of redundant modules.
0096-1	ECO volt. Abnormal	Minor	• The ECO bypass voltage or frequency is out of the preset range. • The ECO bypass voltage or frequency range is incorrectly set. • The bypass input sequence is reverse or the neutral wire is disconnected.	1. Check the bypass input voltage and frequency. 2. Check that the rated voltage, rated frequency, ECO bypass voltage range, and frequency range are correctly set. 3. Check that the bypass cables and circuit breakers are correctly connected.
0098-1	Bypass current not shared	Minor	• The output and input circuit breakers are OFF. • The length of the bypass input or output cables is incorrect. • The bypass SCR open-circuits.	1. Check that the output and bypass input circuit breakers on each rack are ON. 2. Check that bypass input and output power cables on each rack meet the length requirements. 3. Rectify any bypass SCR open-circuit.

 Copyright © Huawei Technologies Co., Ltd.

Alarm ID (Alarm ID-Cause ID)	Alarm Name	Severity	Cause	Solution
0150-1	Inverter asynchronous	Minor	• The bypass frequency changes fast. • The output frequency track rate is incorrectly set.	1. Check that the bypass output frequency does not change fast. 2. Check that the **Output freq. track rate** is properly set.
0101-1	BSC signal abnormal	Minor	• The dual bus connector is loose. • Parameters are set incorrectly.	1. Check the dual bus connector. 2. Check the parameter settings. 3. The master BSC system is not supplying power.
0102-1	Maint. breaker misoperation	Critical	The user operation is incorrect.	1. Shut down the inverter and then close the maintenance circuit breaker. 2. After maintenance, open the maintenance circuit breaker and then start the inverter.
0380	In self-check	Warning	The inverter is in self-check.	Wait until the inverter self-check is complete.

 Copyright © Huawei Technologies Co., Ltd.

C Acronyms and Abbreviations

A

ASIC	application-specific integrated circuit
AWG	American wire gauge

B

BSC	bus synchronization controller
BCB-BOX	battery circuit breaker box
BBB-BOX	battery bus bar box

C

CAN	control area network
CE	Conformite Europeenne

D

DSP	digital signal processing

E

ECO	economic control operation

 Copyright © Huawei Technologies Co., Ltd.

EPO	emergency power off
ECM	energy control module
EOD	end of discharge
F	
FE	fast Ethernet
I	
IEC	International Electrotechnical Commission
L	
LCD	liquid crystal display
M	
MDU	monitor display unit
N	
NC	normally closed
NO	normally open
NTC	negative temperature coefficient
P	
PDC	power distribution cabinet
PDU	power distribution unit
PE	protective earthing

 Copyright © Huawei Technologies Co., Ltd.

PFC	power factor correction
R	
RS485	Recommend Standard 485
S	
SNMP	Simple Network Management Protocol
SOC	state of charge
SOH	state of health
STS	static transfer switch
T	
THDi	total distortion of the input current waveform
THDv	total harmonic distortion of output voltage
U	
UPS	uninterruptible power system
USB	Universal Serial Bus
V	
VRLA	valve-regulated lead acid battery

 Copyright © Huawei Technologies Co., Ltd.