UPS5000-E-(50 kVA-300 kVA)

User Manual (50 kVA Power Modules)

Issue	02
Date	2017-02-25

HUAWEI TECHNOLOGIES CO., LTD.

Copyright © Huawei Technologies Co., Ltd. 2017. All rights reserved.

No part of this document may be reproduced or transmitted in any form or by any means without prior written consent of Huawei Technologies Co., Ltd.

Trademarks and Permissions

HUAWEI and other Huawei trademarks are trademarks of Huawei Technologies Co., Ltd.

All other trademarks and trade names mentioned in this document are the property of their respective holders.

Notice

The purchased products, services and features are stipulated by the contract made between Huawei and the customer. All or part of the products, services and features described in this document may not be within the purchase scope or the usage scope. Unless otherwise specified in the contract, all statements, information, and recommendations in this document are provided "AS IS" without warranties, guarantees or representations of any kind, either express or implied.

The information in this document is subject to change without notice. Every effort has been made in the preparation of this document to ensure accuracy of the contents, but all statements, information, and recommendations in this document do not constitute a warranty of any kind, express or implied.

Huawei Technologies Co., Ltd.

Address: Huawei Industrial Base
Bantian, Longgang
Shenzhen 518129
People's Republic of China

Website: http://e.huawei.com

About This Document

Purpose

This document describes the UPS5000-E-(50 kVA–300 kVA) in terms of its features, performance, working principles, appearance as well as instructions for installation, and operation and maintenance (O&M). UPS is short for uninterruptible power system.

Intended Audience

This document is intended for:

- Sales engineers
- Technical support engineers
- System engineers
- Hardware installation engineers
- Commissioning engineers
- Data configuration engineers
- Maintenance engineers

Symbol Conventions

The symbols that may be found in this document are defined as follows.

Symbol	Description
DANGER	Indicates an imminently hazardous situation which, if not avoided, will result in death or serious injury.
WARNING	Indicates a potentially hazardous situation which, if not avoided, could result in death or serious injury.
CAUTION	Indicates a potentially hazardous situation which, if not avoided, may result in minor or moderate injury.
NOTICE	Indicates a potentially hazardous situation which, if not avoided, could result in equipment damage, data loss, performance deterioration, or unanticipated results.

Copyright © Huawei Technologies Co., Ltd.

Symbol	Description
	NOTICE is used to address practices not related to personal injury.
NOTE	Calls attention to important information, best practices and tips. NOTE is used to address information not related to personal injury, equipment damage, and environment deterioration.

Change History

Updates between document issues are cumulative. Therefore, the latest document issue contains all updates made in previous versions.

Issue 01 (2017-02-25)

Updated the voltage and current data of the monitoring interface card.

Issue 01 (2016-10-20)

This issue is the first official release.

Copyright © Huawei Technologies Co., Ltd.

Contents

About This Document ii

1 Safety Precautions 1

1.1 General Safety 1
1.2 Electrical Safety 3
1.3 Operating Environment 6
1.4 Battery Safety 6
1.5 Mechanical Safety 9
1.6 Laying Out Cables 10

2 Overview 12

2.1 Model Description 12
2.2 Working Principle 13
2.2.1 Conceptual Diagram 13
2.2.2 Working Modes 14
2.2.2.1 Normal Mode 14
2.2.2.2 Bypass Mode 15
2.2.2.3 Battery Mode 16
2.2.2.4 Maintenance Bypass Mode 17
2.2.2.5 ECO Mode 18
2.3 Product Introduction 19
2.3.1 Structure 19
2.3.2 Power Module 24
2.3.3 Bypass Module 25
2.3.4 Control Module 27
2.3.4.1 Overview 27
2.3.4.2 ECM 27
2.3.4.3 Dry Contact Card 29
2.3.4.4 (Optional) Backfeed Protection Card 31
2.3.4.5 (Optional) Dry Contact Extended Card 31
2.3.4.6 Monitoring Interface Card 31
2.4 Typical Configurations 36
2.4.1 Single UPS 37
2.4.2 N+X Parallel System 37

Copyright © Huawei Technologies Co., Ltd.

2.4.3 Dual-Bus System 37
2.5 Optional Components 38
3 Installation 41
3.1 Installation Preparations 41
3.1.1 Site 41
3.1.1.1 Weight and Dimensions 41
3.1.1.2 Installation Environment 45
3.1.1.3 Installation Clearances 45
3.1.2 Tools 45
3.1.3 Preparing Power Cables 47
3.1.4 Unpacking and Checking 52
3.2 Installing a Single UPS 55
3.2.1 Installing the Cabinet 55
3.2.2 Installing Batteries 61
3.2.3 Installing Optional Components 62
3.2.3.1 Installing Antiseismic Kits 62
3.2.3.2 Installing an IP21 Component 64
3.2.3.3 Connecting an Ambient T/H Sensor 65
3.2.3.4 Connecting the BCB box 66
3.2.3.5 Connecting the BBB box 66
3.2.3.6 Installing a Battery Grounding Failure Detector 66
3.2.3.7 Connecting the iBAT 68
3.2.4 UPS Cable Connection Reference 69
3.2.5 Routing Cables (UPS5000-E-200K-SM) 71
3.2.5.1 Routing Cables from the Top 71
3.2.5.2 Routing Cables from the Bottom 78
3.2.6 Routing Cables (UPS5000-E-200K-FM) 83
3.2.6.1 Routing Cables from the Top 83
3.2.6.2 Routing Cables from the Bottom 90
3.2.7 Routing Cables (UPS5000-E-300K-SM) 100
3.2.8 Routing Cables (UPS5000-E-300K-SMT) 107
3.2.9 Remote EPO 113
3.2.10 Connecting Communications Cables 114
3.3 Installing a Parallel System 114
3.3.1 Installing the UPSs 114
3.3.2 Connecting Power Cables 116
3.3.3 Connecting Signal Cables 119
3.4 Installation Verification 121
4 User Interface 124
4.1 LCD Interface 124
4.1.1 LCD 124

Copyright © Huawei Technologies Co., Ltd.

4.1.2 LCD Menu 125
4.1.2.1 Menu Hierarchy 125
4.1.2.2 Initial Startup 126
4.1.2.3 Main Menu 127
4.1.3 System Info Screen 128
4.1.3.1 Module Data Screen 129
4.1.3.2 Runn Info Screen 129
4.1.3.3 Alarms Screen 137
4.1.3.4 Settings Screen 140
4.1.3.5 Maintenance Screen 169
4.1.3.6 About Screen 176
4.1.4 System Status Screen 176
4.1.5 Common Functions Screen 177
4.2 WebUI 178
4.2.1 Login 178
4.2.2 Monitoring Page 180
4.2.2.1 Active Alarms Page 181
4.2.2.2 Real-time Data Page 182
4.2.2.3 Param. Settings Page 182
4.2.2.4 Comm. Config. Page 183
4.2.2.5 CIM Parameters 183
4.2.2.6 Control Page 184
4.2.3 Query Page 184
4.2.3.1 Historical Alarms Page 184
4.2.3.2 Logs Page 185
4.2.4 Config. Page 185
4.2.4.1 User Management 185
4.2.4.2 Site Config. Page 186
4.2.4.3 RCCMD 188
4.2.4.4 Managing the UPS by Using the NMS Complying with RFC1628 Standard 197
4.2.5 Maint. Page 198
4.2.6 Protecting the Server by Using the RCCMD Software 200
4.2.6.1 Introduction to the Software 200
4.2.6.2 RCCMD Event Shutdown and Message Sending 200
4.2.6.3 UPS Alive Check Function 202

5 Operations 205

5.1 Powering On and Starting the UPS 205
5.2 Shutting Down and Powering Off the UPS 216
5.3 Starting the UPS in Battery Mode 218
5.4 Transferring to Bypass Mode 219
5.5 Setting ECO Mode 219

Copyright © Huawei Technologies Co., Ltd.

5.6 Testing Batteries 222
5.6.1 Forced Equalized Charging Test 222
5.6.2 Shallow Discharge Test 223
5.6.3 Capacity Test 224
5.6.4 Test Data Download 226
5.6.4.1 Download over the LCD 226
5.6.4.2 Download over the WebUI 227
5.7 Transferring to Maintenance Bypass Mode 228
5.8 Transferring from Maintenance Bypass Mode to Normal Mode 231
5.9 Performing EPO 233
5.10 Clearing the EPO State 234
5.11 Exporting Data 237
5.12 Setting Hibernation Mode 238
5.12.1 LCD 239
5.12.2 WebUI 240

6 Routine Maintenance 242

6.1 UPS Maintenance 242
6.1.1 Monthly Maintenance 242
6.1.2 Quarterly Maintenance 243
6.1.3 Annual Maintenance 243
6.2 Battery Maintenance 244
6.2.1 Precautions for Battery Maintenance 245
6.2.2 Monthly Maintenance 245
6.2.3 Quarterly Maintenance 246
6.2.4 Annual Maintenance 247

7 Troubleshooting 248

8 Technical Specifications 250

8.1 Physical Specifications 250
8.2 Internal Switch Parameters 250
8.3 Environmental Specifications 251
8.4 Safety Regulations and EMC 251
8.5 Mains Input Electrical Specifications 252
8.6 Bypass Input Electrical Specifications 252
8.7 Battery Specifications 253
8.8 Output Electrical Specifications 253
8.9 System Electrical Specifications 254

A (Optional) TN-C System Application 255

B Menu Hierarchy 258

B.1 Menus on the LCD 258
B.2 Menus on the WebUI 260

Copyright © Huawei Technologies Co., Ltd.

C Alarm List 276

D Acronyms and Abbreviations 289

Copyright © Huawei Technologies Co., Ltd.

1 Safety Precautions

1.1 General Safety

This section describes safety precautions to consider before installing, maintaining, and operating the UPS.

NOTICE

- To minimize the risk of personal injury and damage to equipment, read and follow all the precautions in this document before performing any operation. The "DANGER", "WARNING", "CAUTION", and "NOTICE" statements in this document are only supplemental and do not represent all the safety instructions.
- Only trained and qualified personnel are allowed to install, operate, and maintain Huawei equipment.

Follow the precautions and special safety instructions provided by Huawei when operating Huawei products. Huawei will not be liable for any consequences that are caused due to violations regarding general safety regulations and equipment design, production, and usage safety standards.

Declaration

Huawei does not take responsibilities for the following situations:

- Operation under severe environments that are not specified in this document.
- Installation or use in environments that are not specified in related international standards.
- Unauthorized product changes and software code modification.
- Operations not complying with the operation instructions and safety precautions in this document.
- Damage caused by extreme natural environments.
- Damage caused by using batteries provided by Huawei for non-Huawei UPSs.
- Damage caused by using batteries not provided by Huawei.

Copyright © Huawei Technologies Co., Ltd.

Power Grid Requirements

A standard UPS can connect to a three-phase, five-wire (L1, L2, L3, N, PE) TT, TN-C, TN-S, and TN-C-S AC power distribution system (IEC60364-1).

Local Laws and Regulations

Equipment operations must comply with local laws and regulations. The safety instructions in this document are only supplemental to local safety regulations.

Personal Requirements

DANGER

Only Huawei engineers or engineers certified by Huawei are allowed to perform UPS commissioning and maintenance. Otherwise, human injury or equipment damage may occur, and any resulting UPS faults will be beyond warranty scope.

Personnel who plan to install or maintain Huawei equipment must receive thorough training, understand all necessary safety precautions, and master the correct operation methods. Trained and qualified personnel, or personnel certified or authorized by Huawei are:

- Allowed to install, operate, and maintain the equipment.
- Allowed to remove safety facilities and inspect the equipment.
- Allowed to replace or change the devices or components (including software).
- Operation personnel must report faults or errors that might cause serious safety issues to related owners.
- This product should be installed and used according to the installation and technical, specification requirements found in this manual. Otherwise, the product may be damaged, and the resulting product exceptions or component damage will be beyond the warranty scope.

Grounding Requirements

Devices to be grounded (excluding the energy storage unit) must meet the following requirements:

- When installing a device, install the ground cable first. When removing a device, remove the ground cable at the very end.
- Do not damage the ground conductor.
- Do not operate devices if the ground conductor is not installed. Before operating a device, check the electrical connection of the device to ensure that it is securely grounded.

Personal Safety

- Do not operate the product, or handle cables, during thunderstorms.
- To avoid electric shocks, do not connect safety extra-low voltage (SELV) circuits to telecommunication network voltage (TNV) circuits.

Copyright © Huawei Technologies Co., Ltd.

- Before operating a device, wear electrostatic discharge (ESD) clothes, ESD gloves, and an ESD wrist strap. Remove any conductors (such as jewelry or watches) before the operation to avoid electric shocks or burns.
- In the case of fire, leave the building or the equipment room immediately, and turn on the fire alarm bell or make an emergency call. Never enter the building on fire in any case.
- If the cabinet provides an ESD jack, wear an ESD wrist strap and insert the ground terminal of the ESD wrist strap into the jack.
- Ensure all switches are turned to OFF during device installation.
- Power on the UPS only after authorized engineers arrive at the site.
- If a C2 UPS is used in residential areas, additional measures must be taken to prevent radio frequency interferences.
- If the UPS is used for life-supporting medical apparatus and facilities such as lifts where adequate care has to be taken to ensure personal safety, discuss with the manufacturer in advance about the applicability, settings, management, and maintenance of the UPS, which require special considerations during design.

Device Safety

- Before operation, ensure that the device is firmly anchored to the floor or other solid objects, such as a wall or an installation rack.
- Ensure ventilation vents are unblocked while the system is operating.
- Before powering on the device, ensure that all the screws inside it are securely tightened and will not fall off during operation.
- After the installation, remove packing materials from the equipment area.
- Replace danger signs that have worn out or are unreadable.
- A UPS can be used to serve resistive-capacitive loads, resistive loads, and micro-inductive loads. It is recommended that a UPS not be used for pure capacitive loads, pure inductive loads, and half-wave rectification loads. It does not apply to energy feedback loads.
- Do not alter the UPS internal structure or installation procedure unless consent from the manufacturer is given.
- Never use water to clean electrical components inside or outside the UPS.
- Do not drill holes into a cabinet.

1.2 Electrical Safety

High Voltage

Copyright © Huawei Technologies Co., Ltd.

DANGER

- The high voltage power supply provides power for the device operation. Direct or indirect contact with high voltage power sources may result in fatal injury.
- Non-standard or incorrect high voltage operations may result in fire and electric shocks.

- The personnel who install the AC facility must be qualified to perform high voltage and AC operations.
- When selecting, connecting, and routing power cables, ensure compliance with local laws and regulations.
- When operating the AC power supply facility, ensure compliance with local laws and regulations.
- Before connecting cables to the UPS, ensure that the input power and mains power distribution switches and output power distribution switch are turned off.
- Use only dedicated tools during high voltage and AC operations.
- If the operation is performed in a damp environment, ensure that the device is dry. When water is found in the rack or the rack is damp, switch off the power supply immediately.

High Leakage Current

DANGER

- Ground a device before powering it on. Otherwise, personal injury or device damage may occur.
- If a "high leakage current" tag is attached to the panel of the device, ground the protective ground terminal on the device enclosure before connecting the AC power supply to prevent electric shocks.
- The UPS can generate high leakage currents. Using a circuit breaker that has the leakage current protection function is not recommended.

Power Cable

DANGER

Do not install or remove power cables when the device is on. Transient contact between the core of the power cable and the conductor may generate electric arcs or sparks, which may cause fire or damage eyesight.

- Before moving or reconnecting the UPS, disconnect the mains and batteries, open the output power distribution switch, and wait a period of at least 5 minutes after the UPS completely powers off. Otherwise, electric shocks may occur.
- Before installing or removing the power cable, open the power switch.
- Before connecting a power cable, check that its label is correct.

Copyright © Huawei Technologies Co., Ltd.

Fuse

NOTICE

If a fuse needs replacing, ensure the new fuse is of the same type and specifications so that the system runs safely.

Backfeed Protection Dry Contact

The UPS can be configured with a backfeed protection dry contact to work with an external automatic circuit breaker, preventing the voltage from flowing back to input terminals over static bypass circuits. If device installation and maintenance personnel do not need to use backfeed protection, paste labels on the external bypass input circuit breakers informing that the circuit is connected to the UPS. Disconnect the device from the UPS before performing operations on the circuit.

Electrostatic Discharge

NOTICE

Static electricity generated by human bodies may damage the electrostatic-sensitive components on boards, for example, the large-scale integrated (LSI) circuits.

- Wear a pair of ESD gloves or a well-grounded ESD wrist strap when touching the device or handling boards or application-specific integrated circuits (ASICs).
- When holding a board, hold its edge without touching any components, especially chips.
- Package boards with ESD packaging materials before storing or transporting them.

Figure 1-1 shows how to wear an ESD wrist strap.

Figure 1-1 Wearing an ESD wrist strap

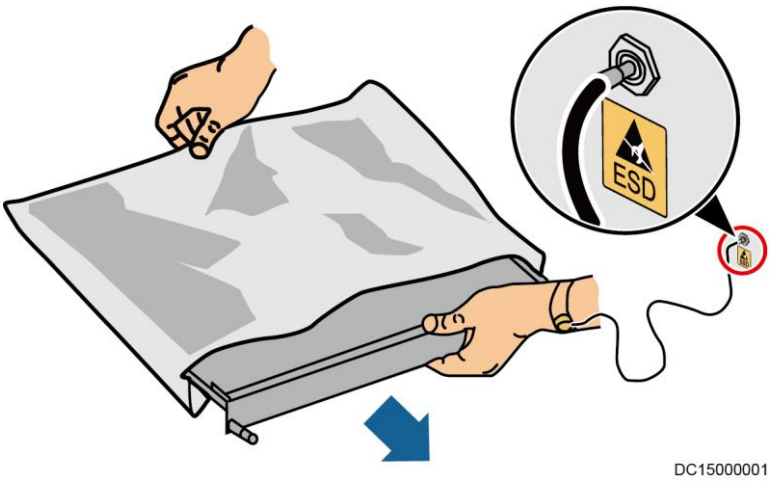

Copyright © Huawei Technologies Co., Ltd.

Liquid Prevention

- Do not place the product under areas prone to water leakage, such as near air conditioner vents, ventilation vents, or feeder windows of the equipment room. Ensure that there is no condensation inside the product or equipment room. Ensure that no liquid enters the product. Otherwise, short circuits will occur and may result in serious injury or death.
- If any liquid is detected inside the product, immediately disconnect the power supply and contact the administrator.

1.3 Operating Environment

DANGER

Do not expose the equipment or perform any operations in an environment with flammable or explosive gas, or smoke.

Any operation on any electrical device in an environment that has flammable air can cause extreme danger. Strictly obey the operating environmental requirements specified in related use manuals when using or storing the device.

Keep the UPS away from the following environments:

- Places where the temperature and humidity are beyond the range of 0–40 ℃ and 0%–95% RH respectively.
- Places in direct sunlight or near heat sources.
- Places subject to vibrations or shocks.
- Dusty places, or places exposed to corrosive substances or salts.
- Marine environments or outdoor land environments (with simple shielding measures) near pollution sources. If a site is near a pollution source, it must be at most:
  - 3.7 km away from saline water areas such as the ocean.
  - 3 km away from serious pollution sources, such as metallurgic plants, coal mines, and thermal power plants.
  - 2 km away from secondary pollution sources, such as chemical, rubber, and galvanization industries.
  - 1 km away from light pollution sources, such as packing houses, tanneries, and boiler rooms.

1.4 Battery Safety

This section describes precautions for operating batteries.

Copyright © Huawei Technologies Co., Ltd.

DANGER

Before operating batteries, carefully read the safety precautions to ensure correct battery handling and connection is performed, and personal safety is managed.

NOTICE

- To ensure battery safety and efficient battery management, use the batteries delivered with the UPS. Huawei shall not be responsible for battery damage caused by using non-Huawei batteries for Huawei UPSs.
- Ensure lead-acid battery handling is in accordance with local regulations.

- Incorrect handling of batteries may cause hazards. When operating batteries, avoid battery short circuits and electrolyte overflow or leakage.
- Electrolyte overflow may damage the device by corroding metal parts and circuit boards, and ultimately damaging the circuit boards.
- Short circuits caused by incorrect operations may cause serious injuries due to high power of batteries.
- Do not reversely connect positive and negative battery terminals.
- Use batteries of the specified type. Otherwise, the batteries may be damaged.
- Check battery connections periodically to ensure that all screws are securely tightened.
- Install or store batteries in clean, cool, and dry environments.
- Do not decompose, transform, or damage batteries. Otherwise, battery short circuit, electrolyte leakage, and even personal injury may occur.

Technical Specifications

Table 1-1 Battery specifications

Battery Type	Minimum/Maximum Number of Batteries	Cell Float Voltage	Cell Equalized Voltage	Cell Minimum Voltage
Sealing lead-acid battery	Thirty to forty-six 12 V batteries	2.23–2.27 V/cell	2.3–2.4 V/cell	1.6–1.9 V/cell
Open lead-acid battery	Thirty to forty-six 12 V batteries	2.23–2.27 V/cell	2.3–2.4 V/cell	1.6–1.9 V/cell

NOTE

A cell indicates a 2 V cell, each 12 V battery consists of six cells.

Copyright © Huawei Technologies Co., Ltd.

Preventative Measures

When installing and maintaining batteries, pay attention to the following points:

- Use dedicated insulated tools.
- Take measures to protect eyes, such as using eye protection devices.
- Avoid skin contact with electrolyte overflow. Wear rubber gloves and protective clothing.
- When handling a battery, ensure that its electrodes always point upward. Do not tilt or overturn batteries.
- Switch off the power supply during installation and maintenance.

Short Circuit

DANGER

Battery short circuits may cause personal injury. The high transient current generated by a short circuit may release a surge of power and cause a fire.

To avoid battery short circuits, do not maintain batteries while they are in use.

Harmful Gas

DANGER

Do not use unsealed lead-acid batteries. Lead-acid batteries emit flammable gas. Therefore, place and secure lead-acid batteries horizontally to prevent fire or corrosion.

Store lead-acid batteries in a place with good ventilation, and take fire safety precautions.

Battery Temperature

DANGER

High temperature may result in battery distortion, damage, and electrolyte overflow.

- Install or store batteries far away from fire sources and heating devices such as transformers. Never burn batteries.
- If the battery temperature exceeds 60 ℃, check the battery for electrolyte overflow. If electrolyte overflows, handle the leakage immediately.

Electrolyte Leakage

Copyright © Huawei Technologies Co., Ltd.

DANGER

In the case of electrolyte leakage, counteract and absorb the leaking electrolyte immediately.

When moving or handling a battery whose electrolyte leaks, note that the leaking electrolyte may harm human bodies. If the electrolyte leaks, use the following substances to counteract and absorb the leaking electrolyte:

- Sodium bicarbonate (baking soda): $NaHCO_3$
- Sodium carbonate (soda): Na_2CO_3

When using substances to counteract and absorb electrolytes, strictly follow the guidelines provided by the battery manufacturer.

If any personnel are exposed to battery electrolyte, wash the exposed area with clean water immediately and seek medical advice if the situation is serious.

1.5 Mechanical Safety

Moving Sharp Objects

CAUTION

Wear protective gloves when moving sharp objects.

Moving Heavy Objects

DANGER

- Perform operations in accordance with all instructional symbols on the device.
- Take caution to avoid injury when moving heavy objects.

- When moving or lifting a device, hold the handle or bottom of the device.
- When transporting a device using a pallet truck, the forks must be properly positioned to ensure that the device does not topple. No excessive tilt or jolt is allowed during the transportation, and the maximum tolerance of the tilting angle during loading and unloading is 15 °. To avoid toppling, secure the device to the pallet truck by using ropes before moving, and assign persons to watch out the device during movement.
- Move the cabinet with caution. Any bumping or falling may damage the device.

Copyright © Huawei Technologies Co., Ltd.

Figure 1-2 Tilting angle of a cabinet

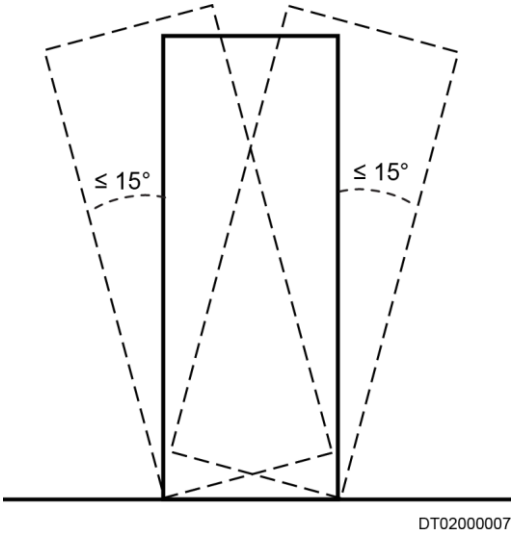

Handling Fans

Do not insert fingers or boards into the operating fans until the fans are switched off, and have stopped running.

1.6 Laying Out Cables

Binding Signal Cables

NOTICE

Signal cables must be bound separately from strong-current cables and high-voltage cables.

Laying Out Cables

When the temperature is low, a violent strike or vibrations may damage the cable sheathing. To ensure cable safety, comply with the following requirements:

- Cables can be laid, or installed, only when the temperature is higher than 0 ℃ (32 ℉). Handle cables with caution, especially at lower temperatures.
- Before laying out cables that have been stored in temperatures lower than 0 ℃ (32 ℉), move the cables to an environment that is at the requisite ambient temperature. Store them in this environment for at least 24 hours.
- Do not drop the cables directly from the vehicle.
- As the insulation layer of a cable may age, or be damaged from high temperatures, ensure a sufficient distance between cables and the DC busbars, shunts, and fuses. Cables prepared by the customer should be flame resistant. Cables must not be routed

Copyright © Huawei Technologies Co., Ltd.

behind the air exhaust vent of the cabinet. The air exhaust vent should not be blocked by any object.

Before connecting a cable, ensure that the cable and cable label to be used meet the actual installation requirements.

Copyright © Huawei Technologies Co., Ltd.

2 Overview

2.1 Model Description

Figure 2-1 numerically labels UPS model number details, and Table 2-1 describes these details.

Figure 2-1 UPS model number

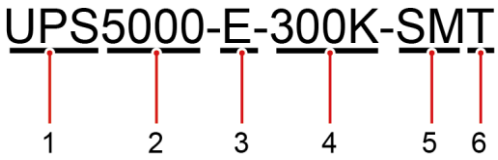

Table 2-1 Model number details

No.	Item	Description
1	Product category	UPS
2	UPS family	5000
3	UPS subcategory	E series
4	Output capacity	• 200K: 200 kVA • 300K: 300 kVA
5	Configuration type	• SM: standard configuration • FM: full configuration
6	Cable routing	Routed from the top (only the UPS5000-E-320K-SMT model contains "T")

This document describes the following UPS models:

- UPS5000-E-200K-SM/FM

  The models provide four configurations: 50 kVA, 100 kVA, 150 kVA, and 200 kVA.

Copyright © Huawei Technologies Co., Ltd.

- UPS5000-E-300K-SM/SMT

  The models provide six configurations: 50 kVA, 100 kVA, 150 kVA, 200 kVA, 250 kVA, and 300 kVA.

NOTE

- The UPS5000-E-200K-SM supports cable routing from the top or bottom.
- The UPS5000-E-200K-FM supports cable routing from the top and can support cable routing from the bottom if a cable entry cabinet is configured.
- The UPS5000-E-300K-SM supports cable routing from the bottom.
- The UPS5000-E-300K-SMT supports cable routing from the top.

2.2 Working Principle

NOTE

- → indicates an input mode.
- ➡ indicates the energy flow direction.

2.2.1 Conceptual Diagram

The UPS5000 is an online UPS with a modular design that facilitates maintenance and capacity expansion. All modules are under intelligent digital signal processing (DSP) control. A power module consists of a rectifier and an inverter. The power module converts inputs into pure, high-quality sine wave outputs by using high-frequency switching. Figure 2-2 shows a conceptual diagram for the UPS.

Copyright © Huawei Technologies Co., Ltd.

Figure 2-2 UPS conceptual diagram

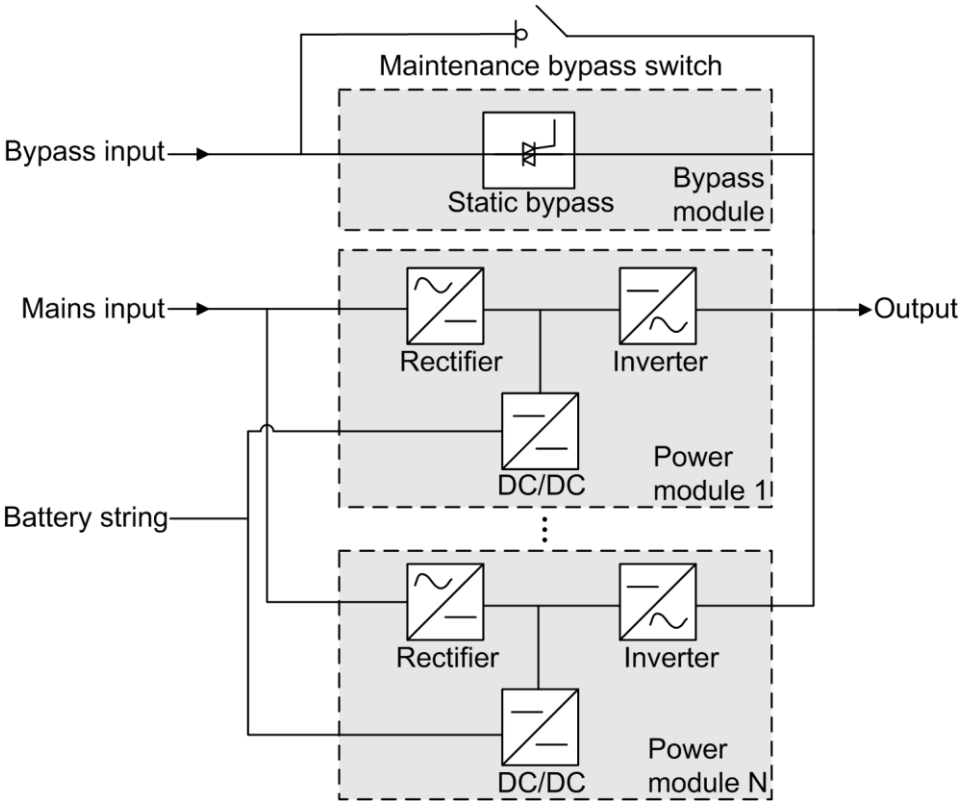

2.2.2 Working Modes

2.2.2.1 Normal Mode

In normal mode, the rectifier converts AC power into DC power, then the inverter converts DC power into high-precision AC outputs. The conversions protect loads from interference such as input harmonics, glitches, and voltage transients. Figure 2-3 shows a conceptual diagram of the UPS working in normal mode.

Copyright © Huawei Technologies Co., Ltd.

Figure 2-3 UPS conceptual diagram in normal mode

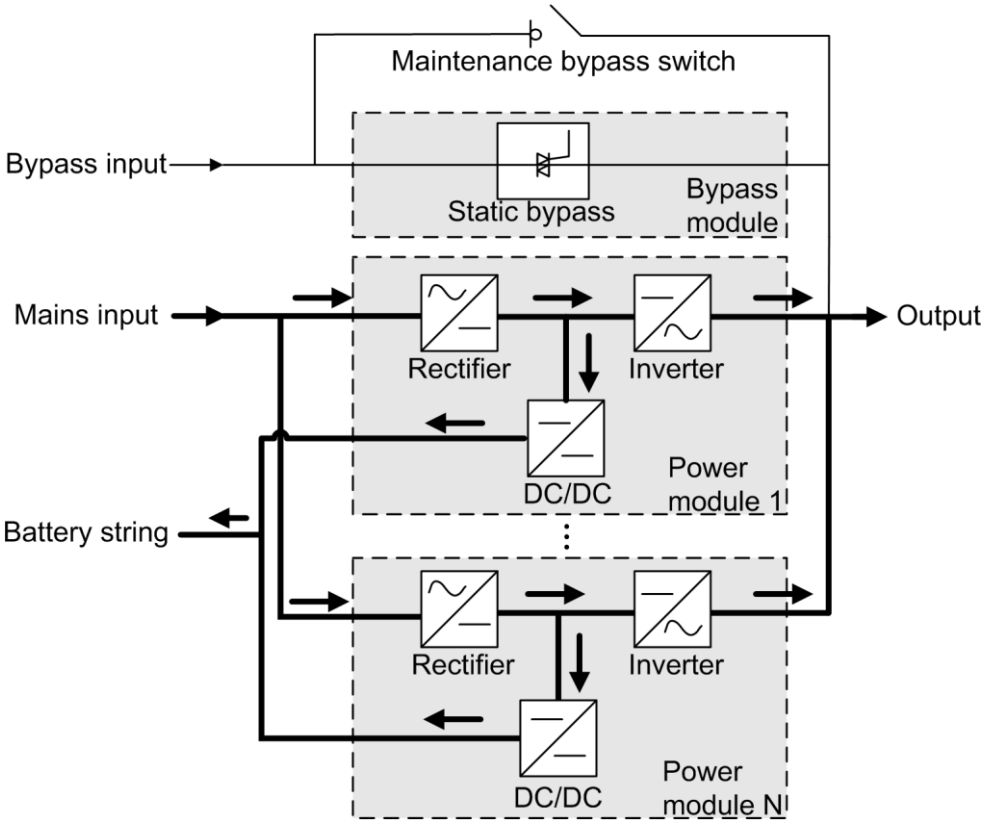

2.2.2.2 Bypass Mode

The UPS automatically transfers to bypass mode upon detecting power module overtemperature, overload, or other faults that may cause the inverter to shut down. The bypass power supply is not protected by the UPS which means it may be affected by mains outage, and incorrect AC voltage or frequency. Figure 2-4 shows a conceptual diagram of the UPS working in bypass mode.

Copyright © Huawei Technologies Co., Ltd.

Figure 2-4 UPS conceptual diagram in bypass mode

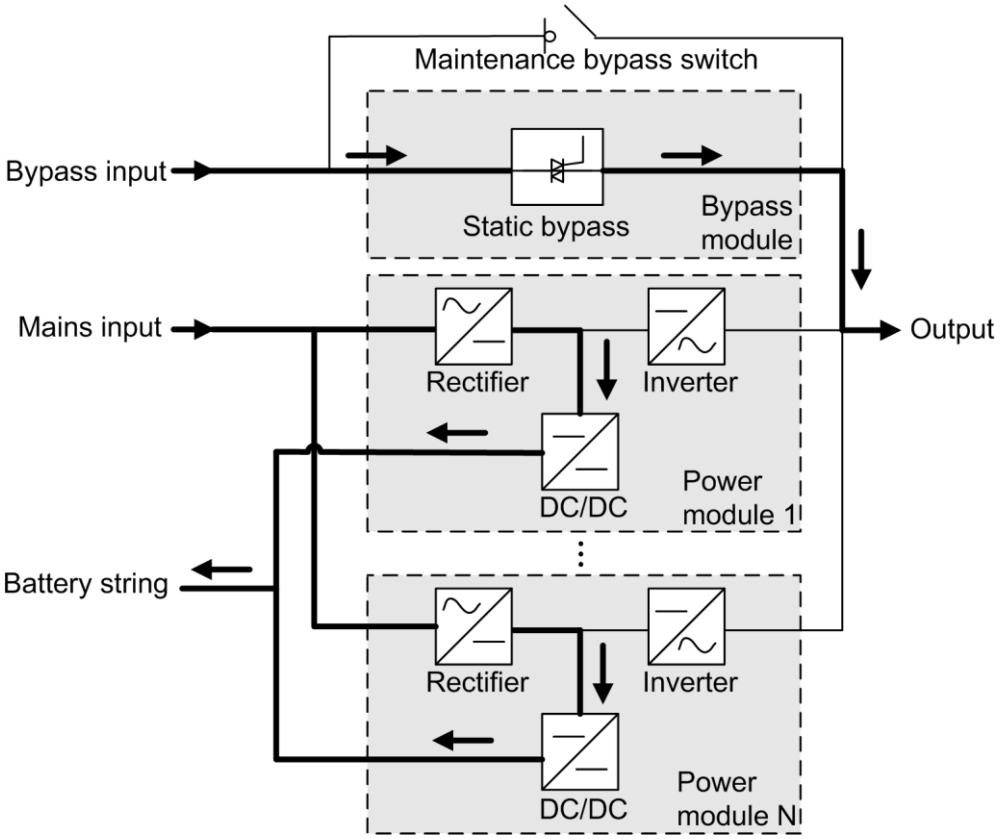

2.2.2.3 Battery Mode

If the AC input voltage is not normal, the UPS transfers to battery mode to obtain power from batteries. The inverter then converts the power into AC outputs. Figure 2-5 shows a conceptual diagram of the UPS working in battery mode.

Copyright © Huawei Technologies Co., Ltd.

Figure 2-5 UPS conceptual diagram in battery mode

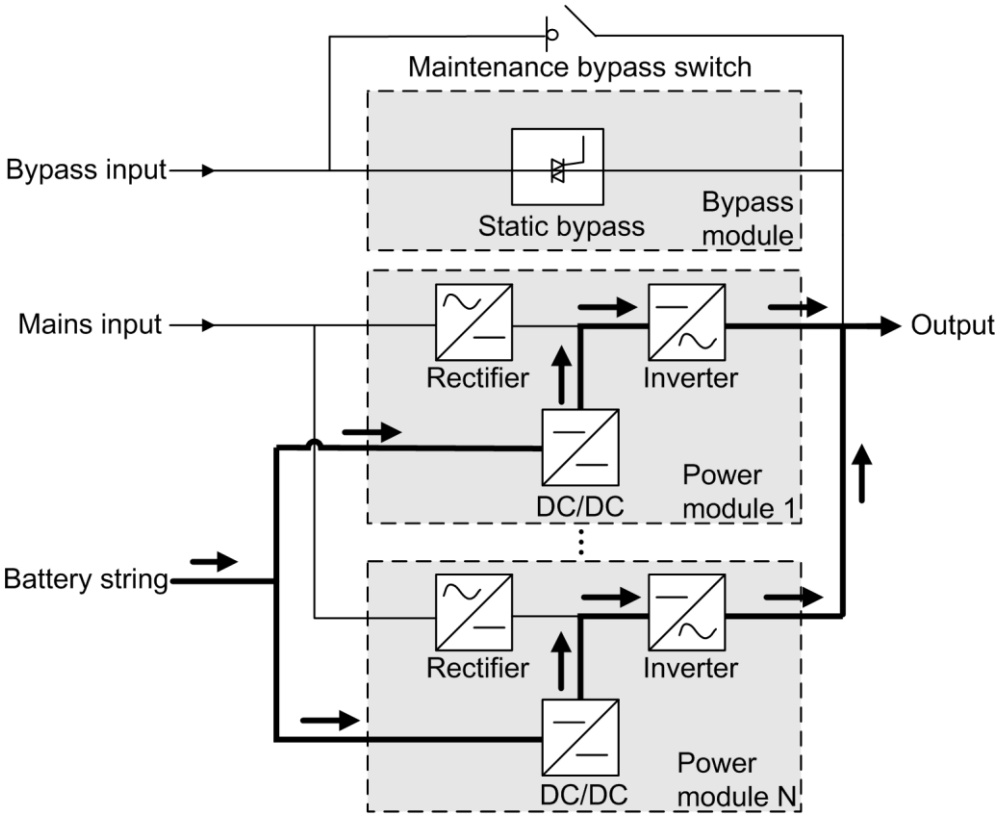

2.2.2.4 Maintenance Bypass Mode

In maintenance bypass mode, the current flows through maintenance bypass circuits, instead of the power module or bypass module. UPS maintenance can be performed in this mode. Figure 2-6 shows a conceptual diagram of the UPS working in maintenance bypass mode.

Copyright © Huawei Technologies Co., Ltd.

Figure 2-6 UPS conceptual diagram in maintenance bypass mode

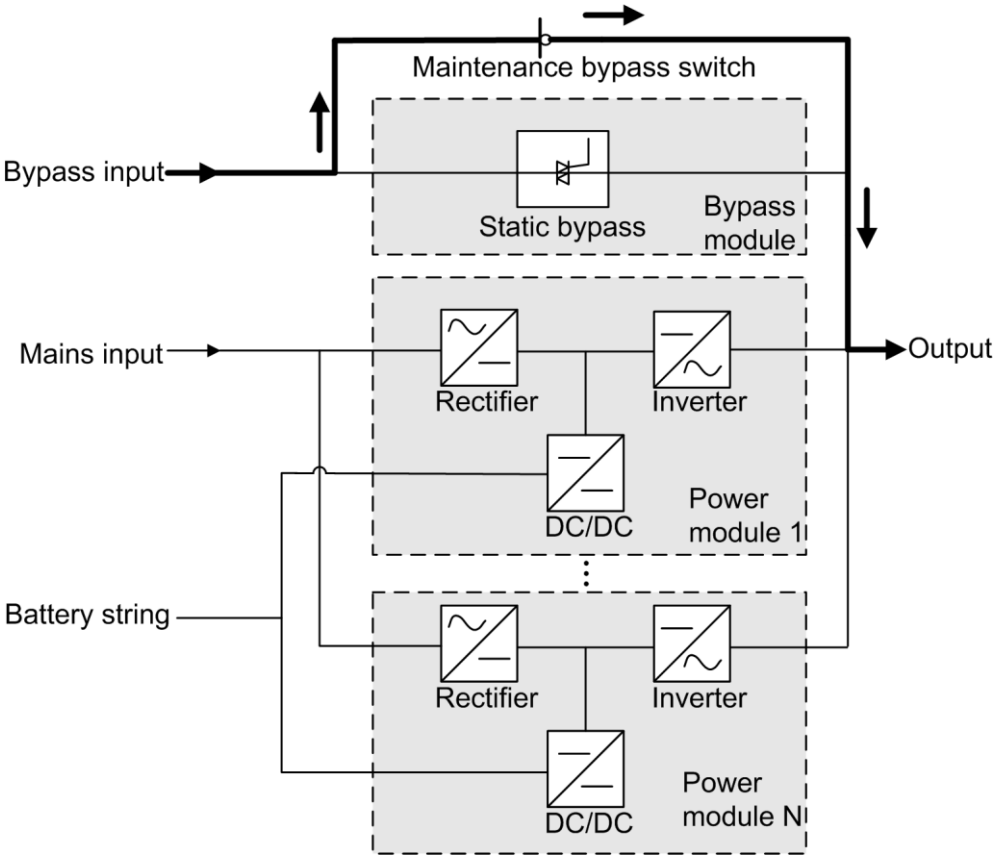

2.2.2.5 ECO Mode

The economic control operation (ECO) mode is an energy-saving mode that can be configured on the LCD or web user interface (WebUI). In ECO mode, when the bypass input voltage is within the ECO voltage range, the static bypass switch turns on, and the bypass supplies power. When the bypass input voltage is outside the ECO voltage range, the UPS transfers from bypass mode to normal mode. In bypass mode or normal mode, the rectifier keeps working and charging the batteries using a charger. Using ECO mode provides a higher efficiency. Figure 2-7 shows a conceptual diagram of the UPS working in ECO mode.

Copyright © Huawei Technologies Co., Ltd.

Figure 2-7 UPS conceptual diagram in ECO mode

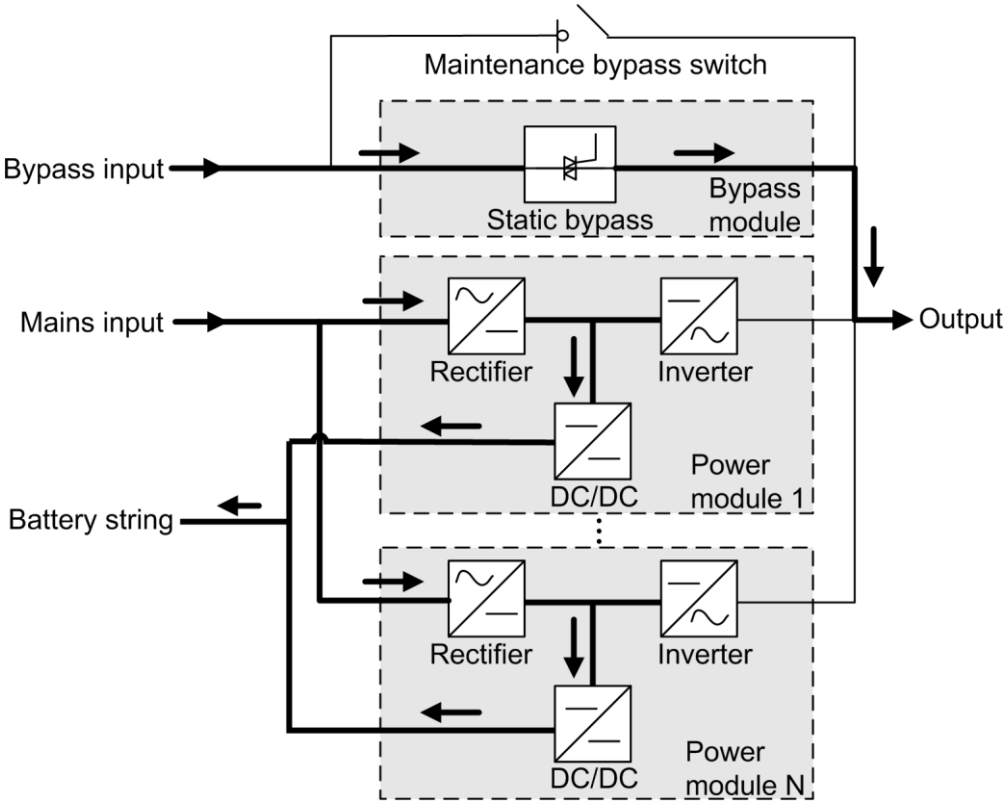

NOTE

Manual startup is required to ensure that the inverter is in standby state and the power flow has reached the inverter.

2.3 Product Introduction

2.3.1 Structure

- Figure 2-8 shows the front view of the UPS5000-E-200K-SM.
- Figure 2-9 shows the front view of the UPS5000-E-200K-FM.
- Figure 2-10 shows the front view of the UPS5000-E-300K-SM.
- Figure 2-11 shows the front view of the UPS5000-E-300K-SMT.

Copyright © Huawei Technologies Co., Ltd.

Figure 2-8 UPS5000-E-200K-SM front view (with the door open)

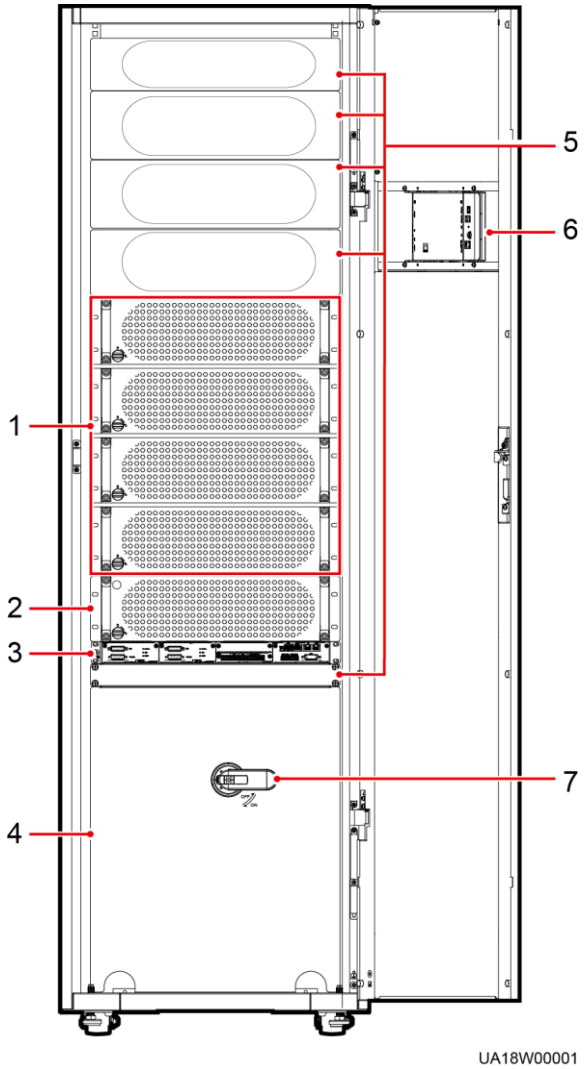

(1) Power modules	(2) Bypass module	(3) Control module	(4) Power distribution subrack cover
(5) Filler panels	(6) Monitor display unit	(7) Maintenance bypass switch	

Copyright © Huawei Technologies Co., Ltd.

Figure 2-9 UPS5000-E-200K-FM front view (with the door open)

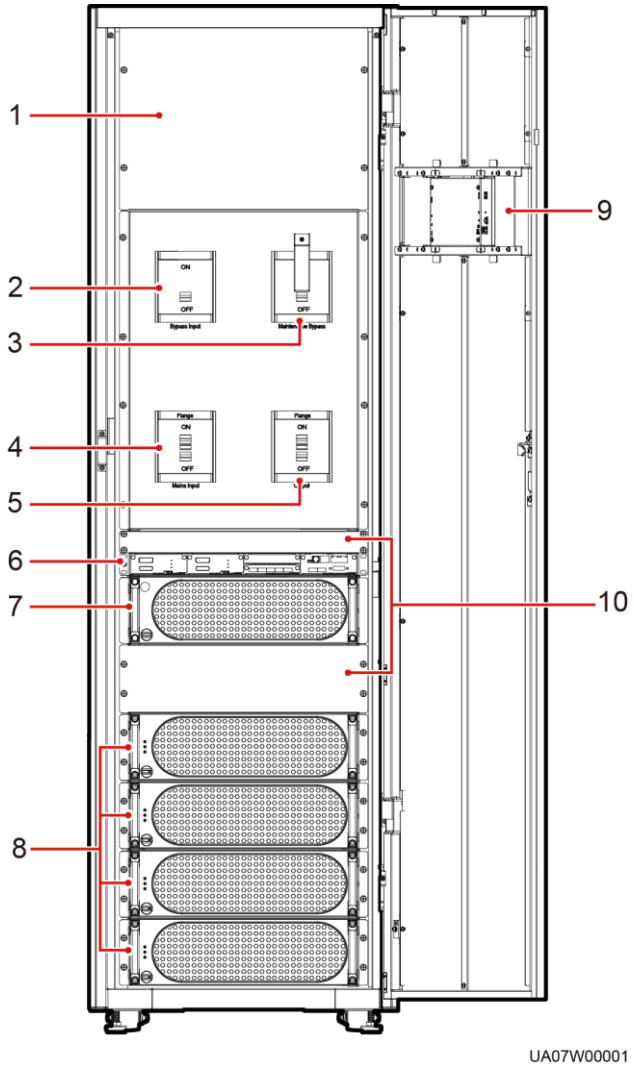

(1) Power distribution subrack cover	(2) Bypass input switch	(3) Maintenance bypass switch	(4) Mains input switch
(5) Output switch	(6) Control module	(7) Bypass module	(8) Power modules
(9) Monitor display unit	(10) Filler panels		

Copyright © Huawei Technologies Co., Ltd.

Figure 2-10 UPS5000-E-300K-SM front view (with the door open)

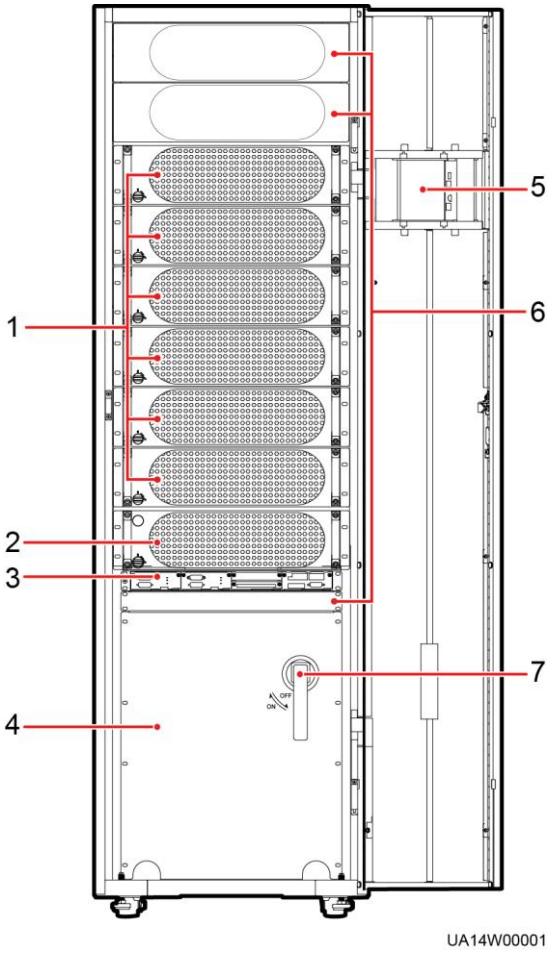

(1) Power modules	(2) Bypass module	(3) Control module	(4) Power distribution subrack cover
(5) Monitor display unit	(6) Filler panels	(7) Maintenance bypass switch	

Copyright © Huawei Technologies Co., Ltd.

Figure 2-11 UPS5000-E-300K-SMT front view (with the door open)

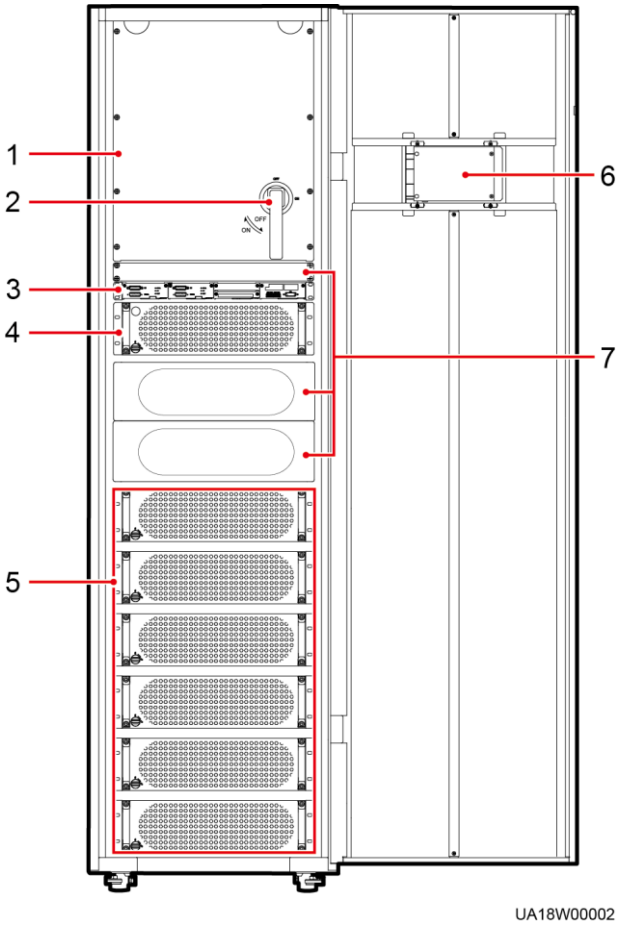

(1) Power distribution subrack cover	(2) Maintenance bypass switch	(3) Control module	(4) Bypass module
(5) Power modules	(6) Monitor display unit	(7) Filler panels	

Copyright © Huawei Technologies Co., Ltd.

2.3.2 Power Module

Appearance

Figure 2-12 Power module

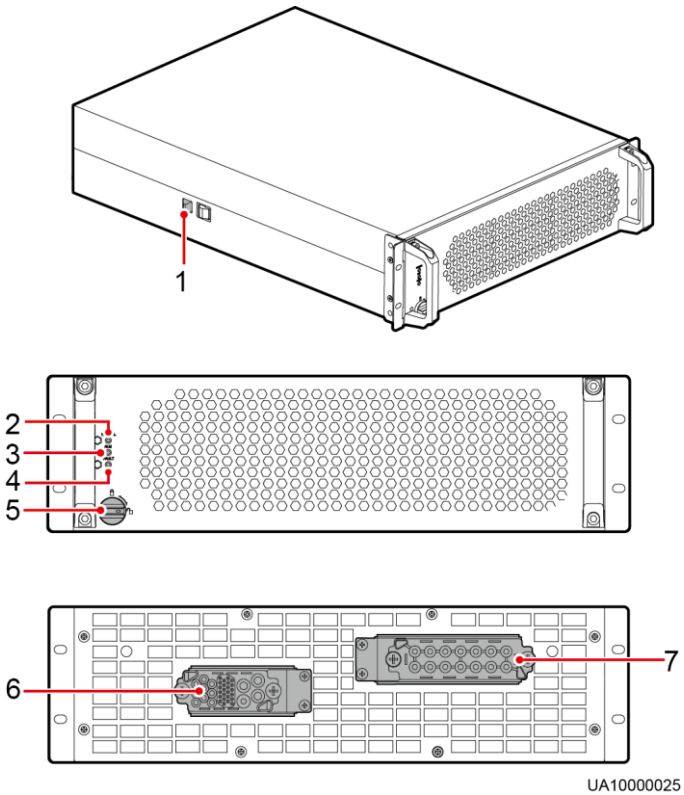

(1) Positioning lock (2) Run indicator (3) Alarm indicator (4) Fault indicator

(5) Ready switch (6) Output port (7) Input port

Functions

The power module consists of a power factor correction (PFC) rectifier and inverter. The rectifier performs AC-DC or DC-DC conversion on the mains and battery inputs, and stabilizes the bus voltage. The inverter converts DC inputs into AC sine wave outputs.

Specifications

- Dimensions (H x W x D): 130 mm x 442 mm x 620 mm
- Weight: 32 kg
- Rated output capacity: 50 kVA/50 kW
- Power density: 23 W/inch^3

Copyright © Huawei Technologies Co., Ltd.

2.3.3 Bypass Module

Appearance

Figure 2-13 shows a bypass module of a 200 kVA UPS.

Figure 2-13 Bypass module

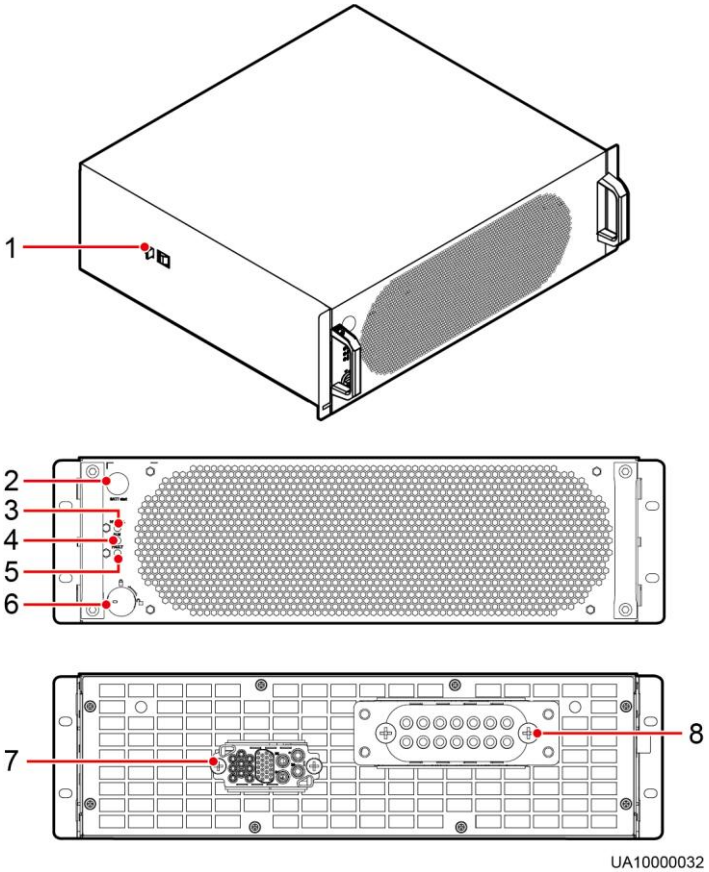

(1) Positioning lock	(2) Cold start button	(3) Run indicator	(4) Alarm indicator
(5) Fault indicator	(6) Ready switch	(7) Signal port	(8) Input and output ports

Figure 2-14 shows a bypass module of a 300 kVA UPS.

Copyright © Huawei Technologies Co., Ltd.

Figure 2-14 Bypass module

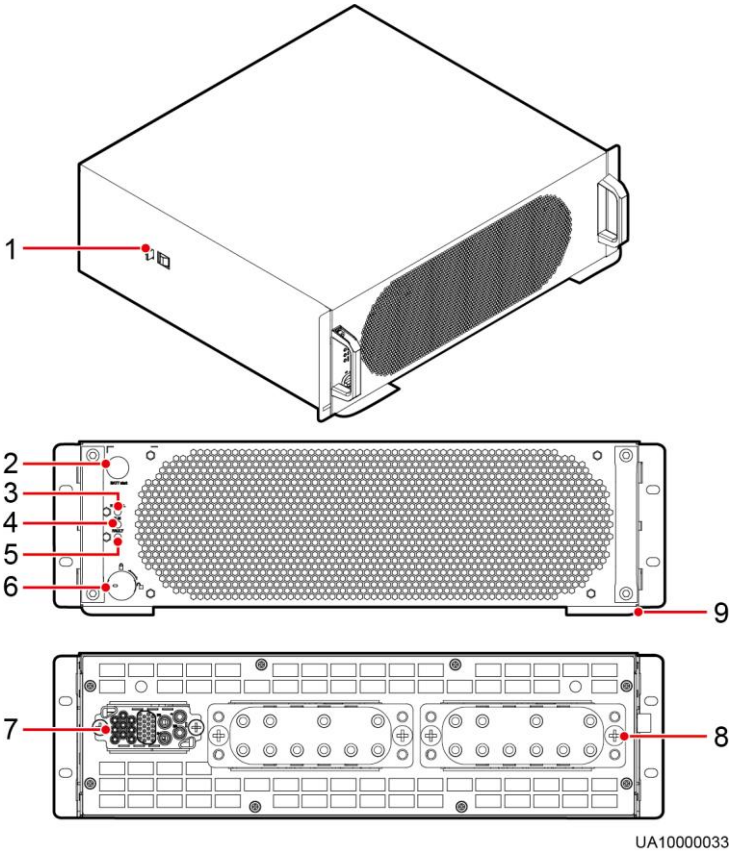

(1) Positioning lock	(2) Cold start button	(3) Run indicator	(4) Alarm indicator
(5) Fault indicator	(6) Ready switch	(7) Signal port	(8) Input and output ports
(9) Crowbar			

Functions

The bypass module supplies power in the following cases:

If the UPS is set to ECO mode and the bypass voltage is within the specified range, the UPS works in bypass mode.

If the power module overload times out, the UPS transfers to bypass mode.

Both the active and standby ECMs are abnormal.

The system fails to run properly and transfers to bypass mode.

A manual operation is performed to transfer to bypass mode.

Specifications

- Dimensions (H x W x D): 130 mm x 420 mm x 500 mm
- Weight
  - 200 kVA: 19 kg

Copyright © Huawei Technologies Co., Ltd.

– 300 kVA: 23.8 kg

2.3.4 Control Module

2.3.4.1 Overview

In a standard configuration, the control module consists of two ECMs, one dry contact card, and one monitoring interface card (from left to right). The four cards are hot swappable. One subrack is reserved above the dry contact card. A backfeed protection card or dry contact extended card can be inserted into this subrack.

Figure 2-15 shows the signal panel on the control module.

Figure 2-15 Signal panel on the control module

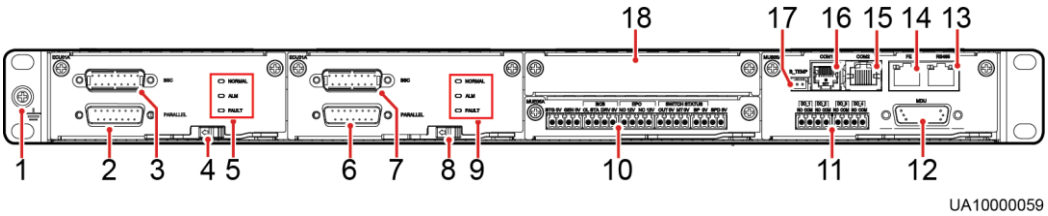

(1) Ground terminal	(2) Parallel port 1	(3) BSC port 1	(4) ECM 1 ready switch
(5) Indicators for ECM 1	(6) Parallel port 2	(7) BSC port 2	(8) ECM 2 ready switch
(9) Indicators for ECM 2	(10) Dry contact card	(11) Dry contacts	(12) MDU port
(13) RS485 port	(14) Fast Ethernet (FE) port	(15) COM2 port	(16) COM1 port
(17) Battery temperature sensor port	(18) Optional card subrack cover		

NOTE
Ports are protected by a security mechanism.

2.3.4.2 ECM

The control module consists of two energy control modules (ECMs) in active/standby mode. Each ECM provides one bus synchronization controller (BSC) port and one PARALLEL port, as shown in Figure 2-16.

Copyright © Huawei Technologies Co., Ltd.

Figure 2-16 ECM

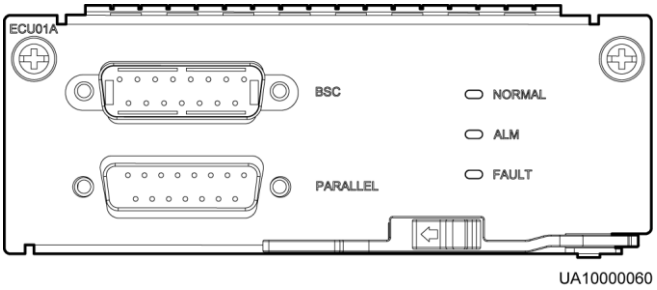

In a parallel system, the PARALLEL ports on ECMs are interconnected in the shape of a ring using parallel cables. A hot swappable BSC is used in a dual-bus system to process the communication information between two UPS systems. Table 2-2 describes the functions of the ECM.

Table 2-2 Ports on the ECM

Silk Screen	Description
PARALLEL	This port transmits parallel signals. To connect UPSs in parallel, use a parallel cable to connect the parallel ports on the ECMs of the UPSs in the shape of a ring. *N* UPSs require *N* parallel cables so that at least two parallel cables are connected to each UPS, which improves reliability.
BSC	The BSC port is used in a dual-bus system to synchronize output frequencies and phases between UPS systems, ensuring that two buses can switch with each other.

NOTE

For a single UPS, the parallel cable is not needed.

Table 2-3 Indicator description

Indicator	Color	Status	Description
NORMAL	Green	Steady on	This ECM is the active ECM.
		Blinking at 0.5 Hz	This ECM is the standby ECM and it is ready.
		Off	This ECM is not ready or the CPLD of this ECM is being upgraded.
		Blinking at 4 Hz	The DSP of the ECM is being upgraded or not configured.
ALM	Yellow	Steady on	The ECM has a minor alarm, but it does not need to be replaced.
		Off	The ECM has no minor alarm or the DSP of the ECM is being upgraded.

Copyright © Huawei Technologies Co., Ltd.

Indicator	Color	Status	Description
FAULT	Red	Steady on	The ECM has a critical alarm, and it needs to be replaced.
		Off	The ECM has no critical alarm or the DSP of the ECM is being upgraded.

2.3.4.3 Dry Contact Card

The dry contact card allows the UPS to monitor and manage the battery system (including the external battery switch), provide alarm signals for external devices, and implement remote emergency power-off (EPO).

Figure 2-17 shows control signal ports on the dry contact card.

Figure 2-17 Dry contact card

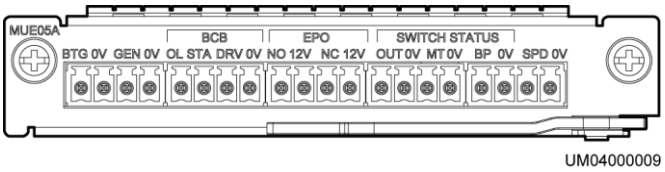

Table 2-4 describes the ports on the dry contact card.

Table 2-4 Ports on the dry contact card

Silk Screen	Description	Status	Initial Status
BTG	Port for detecting battery grounding faults	• Connected: battery grounding fault • Disconnected: no battery grounding fault	Disconnected
0V	Port for signal ground		
GEN	Port for detecting diesel generator (D.G.) mode	• Connected: D.G. mode • Disconnected: non-D.G. mode	Disconnected
0V	Port for signal ground		
BCB_OL	Port for detecting the BCB box	• Grounded: BCB box connected • Disconnected: BCB box not connected	Grounded
BCB_STA	Port for monitoring the battery switch	• Connected: battery switch ON • Disconnected: battery switch	Disconnected

Copyright © Huawei Technologies Co., Ltd.

Silk Screen	Description	Status	Initial Status
		OFF	
BCB_DRV	Controls battery circuit breaker trip. When the voltage is +12 V, the circuit breaker trips.	• 0 V: battery switch not tripped • 12 V: battery switch tripped	0 V
BCB_0V	Port for signal ground		
EPO_NO	Emergency power-off (EPO) port	If the normally open (NO) port is connected to the EPO_12V port, EPO is triggered.	Disconnected
EPO_12V	+12 V		
EPO_NC	EPO port	If the normally closed (NC) port is disconnected from the EPO_12V port, EPO is triggered.	Connected
EPO_12V	+12 V		
SWITCH STATUS_OUT	Port for monitoring the UPS output circuit breaker	• Connected: circuit breaker ON • Disconnected: circuit breaker OFF	Connected
SWITCH STATUS_0V	Port for signal ground		
SWITCH STATUS_MT	Port for monitoring the maintenance circuit breaker	• Disconnected: circuit breaker ON • Connected: circuit breaker OFF	Disconnected
SWITCH STATUS_0V	Port for signal ground		
SWITCH STATUS_BP	Port for monitoring the bypass input circuit breaker	• Connected: circuit breaker ON • Disconnected: circuit breaker OFF	Connected
SWITCH STATUS_0V	Port for signal ground		
SPD	Port for monitoring the input AC surge protective device (SPD)	• Connected: SPD enabled • Disconnected: SPD disabled	Connected
0V	Port for secondary side ground		

Copyright © Huawei Technologies Co., Ltd.

NOTE

- The dry contact interface card takes effect only after it is set on the monitoring system. Set the unused dry contact signal to the unused status.
- Set the EPO port to NO or NC as required.
- When multiple UPSs are paralleled, all dry contact signals to be used need to connect to each UPS.
- Single cables require dual-insulated twisted cables. If the length of a power cable is within 25–50 m, its cross-sectional area must be 0.5 mm^2 to 1.5 mm^2.

2.3.4.4 (Optional) Backfeed Protection Card

Backfeed can cause damage to the UPS, loads, and maintenance personnel. If backfeed occurs, the backfeed protection card triggers alarm signals, or disconnects the backfeed loop. The backfeed protection card uses relay contact signals. The signal ports support any power signals with a voltage of no more than 240 V AC and a current of less than 4 A. For details, see the *UPS5000 Backfeed Protection Card User Manual (03021KQQ)*.

2.3.4.5 (Optional) Dry Contact Extended Card

The dry contact extended card provides five signal output ports and five signal input ports. For details, see the *UPS5000 Dry Contact Extended Card User Manual (03021RKN)*.

2.3.4.6 Monitoring Interface Card

NOTICE

- The FE port resembles the RS485 port. Follow the silk screen when connecting communications cables as, if the RS485 port is mistaken for the FE port during cable connection, the WebUI cannot be connected and MDU communication fails. Conversely, if the FE port is mistaken for the RS485 port during cable connection, RS485 communication fails.
- If MDU communication fails, the "Comm. failure" message is displayed on the LCD, screen switching is disabled, the buzzer buzzes, and the fault indicator is red. Once the fault is rectified, the LCD recovers, and the alarm is cleared.
- Only once being set will dry contact signals take effect. Set unused dry contact signals to the unused state on the LCD.
- In a parallel system, ensure that used dry contacts properly connect to each UPS.

The monitoring interface card provides external ports as well as monitoring and control functions for the MDU. The ports include the ambient temperature and humidity sensor port, iBAT 2.0 port, FE port, battery temperature monitoring port, and network management port. The MDU monitors the UPS, allows users to set parameters, delivers commands, reports information, and displays the UPS key information and parameters on the LCD.

Figure 2-18 shows the signal ports on the monitoring interface card.

Copyright © Huawei Technologies Co., Ltd.

Figure 2-18 Monitoring interface card

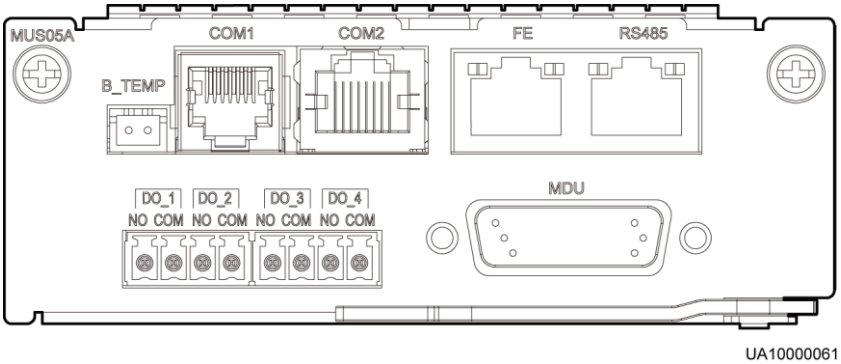

Table 2-5 describes the ports on the monitoring interface card.

NOTE

DO_1 to DO_4 meet the maximum voltage and current requirements of 30 V DC/1 A or 60 V DC/0.5 A.

Table 2-5 Ports on the monitoring interface card

Port	Silk Screen	Description
DO_1	NO	DO_1 is used to output alarms and indicates critical alarms by default. It can be set to indicate minor alarms, bypass mode, battery mode, or low battery voltage.
	COM	
DO_2	NO	DO_2 is used to output alarms and indicates minor alarms by default. It can be set to indicate critical alarms, bypass mode, battery mode, or low battery voltage.
	COM	
DO_3	NO	DO_3 is used to output alarms and indicates bypass mode by default. It can be set to indicate critical alarms, minor alarms, battery mode, or low battery voltage.
	COM	
DO_4	NO	DO_4 is used to output alarms and indicates battery mode by default. It can be set to indicate critical alarms, minor alarms, bypass mode, or low battery voltage.
	COM	
DB26	MDU	Provides FE, RS485, I2C, and CAN signals.
Battery temperature sensor port	B_TEMP	Connects to an indoor battery temperature sensor.
Southbound communications port 1	COM1	Connects to an ambient temperature and humidity sensor over two wires.
Southb	COM2	Connects to a southbound device, such as an iBAT 2.0.

Copyright © Huawei Technologies Co., Ltd.

Port	Silk Screen	Description
ound communications port 2		
Network port	FE	Connects to the network port on a PC.
Northbound communications port	RS485	Connects to a northbound network management device or a third-party network management device over two wires.

NOTE

- Signal cables must be double-insulated twisted cables. If the cable length is 25–50 m, the cross-sectional area must be 0.5–1.5 mm^2.
- RS485 cables and FE cables must be shielded cables.

Figure 2-19 and Figure 2-20 are recommended wiring methods for DO ports.

Figure 2-19 Wiring method 1

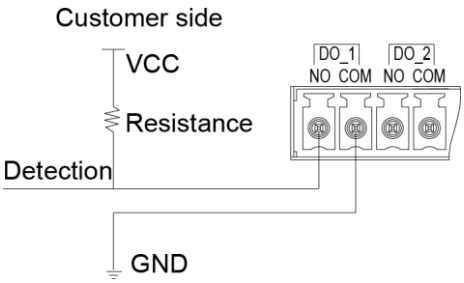

Figure 2-20 Wiring method 2

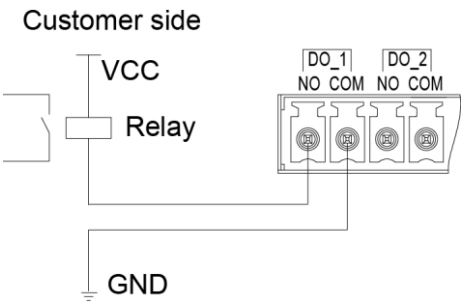

Figure 2-21 and Table 2-6 describe the COM1 pin definitions.

Copyright © Huawei Technologies Co., Ltd.

Figure 2-21 COM1 pins

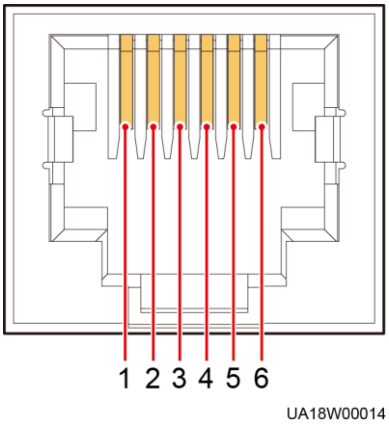

Table 2-6 COM1 pin definition

Pin	Description
1	GND
2	N/A
3	RS485-
4	RS485+
5	N/A
6	12V_PORT

Figure 2-22 and Table 2-7 describe the COM2 pin definitions.

Figure 2-22 COM2 pins

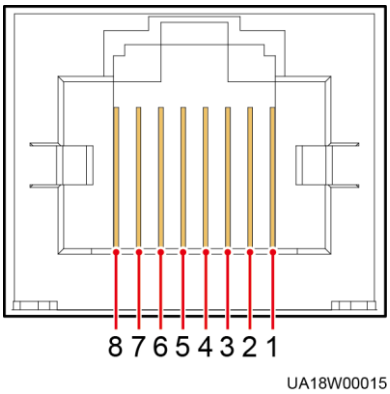

Copyright © Huawei Technologies Co., Ltd.

Table 2-7 COM2 pin definition

Pin	Description
1	RS485+
2	RS485-
3	N/A
4	RS485+
5	RS485-
6	GND
7	CANH0
8	CANL0

Figure 2-23 and Table 2-8 describe the RS485 pin definitions.

Figure 2-23 RS485 pins

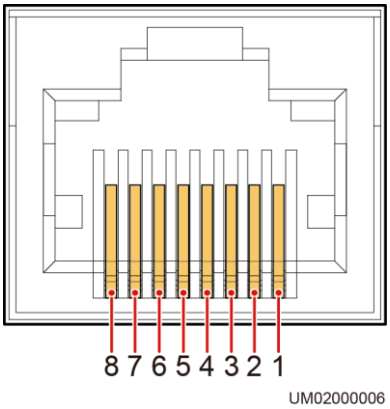

Table 2-8 RS485 pin definition

Pin	Description
1	RS485_T+
2	RS485_T–
3	N/A
4	RS485_R+
5	RS485_R–
6	GND
7	N/A

Copyright © Huawei Technologies Co., Ltd.

Pin	Description
8	N/A

NOTE

If cables are prepared onsite, follow the three methods below:

- Connect pin 1 and pin 2. Pin 1 connects to RS485+ and pin 2 connects to RS485–.
- Connect pin 4 and pin 5. Pin 4 connects to RS485+ and pin 5 connects to RS485–.
- Connect pins 1, 2, 4, and 5. Twist cables to pin 1 and pin 4 into one cable and then connect it to RS485+. Twist cables to pin 2 and pin 5 into one cable and then connect it to RS485–.

2.4 Typical Configurations

NOTE

Conceptual diagrams in this section are used as examples when no battery string is shared.

Table 2-9 describes typical UPS configurations.

Table 2-9 Typical configurations

Configuration	Application Scenario
Single UPS	A single UPS5000-E is applicable to scenarios with light loads. Due to its modular design, the power will be redundant when loads are light.
N+X parallel system, where N is the number of requisite UPSs connected in parallel, and X is the number of redundant UPSs	An N+X parallel system supplies power to important loads in small- and medium-sized equipment rooms. It features high reliability and powerful transient overload capacity. $1 \leq N+X \leq 4$ ($1 \leq N \leq 4$, $0 \leq X \leq 3$) For example, in a 3+1 parallel system, three UPSs are requisite and one UPS is redundant.
Dual-bus system	The dual-bus system is suitable for scenarios where high availability requirements are posed for power supply. The dual-bus system supplies power to important loads in large- and medium-sized equipment rooms and data centers. In addition to common parallel system advantages, the dual-bus system also provides outstanding availability and eliminates bottleneck failures. However, configuration of the dual-bus system is complex.

NOTE

The number of requisite UPSs and redundant ones can be set on the LCD and WebUI based on actual requirements. A 1+1 parallel system is a typical configuration.

Copyright © Huawei Technologies Co., Ltd.

2.4.1 Single UPS

The UPS5000-E uses a modular design in which multiple power modules are connected in parallel to deliver a high loading capacity. If a single power module is faulty, the other power modules continue working. When the load power is small, even a single UPS can provide redundant capacity, which ensures high reliability. Figure 2-2 shows a conceptual diagram of a single UPS.

2.4.2 N+X Parallel System

In an N+X parallel system, the mains input, bypass input, and AC output terminals between cabinets are connected in parallel. Energy control modules (ECMs) on each UPS are connected over parallel cables. The parallel connections synchronize the UPS outputs to supply power to loads. If one UPS fails, the other UPSs continue supplying power to loads. Figure 2-24 shows a conceptual diagram of an N+X parallel system.

Figure 2-24 Conceptual diagram of an N+X parallel system

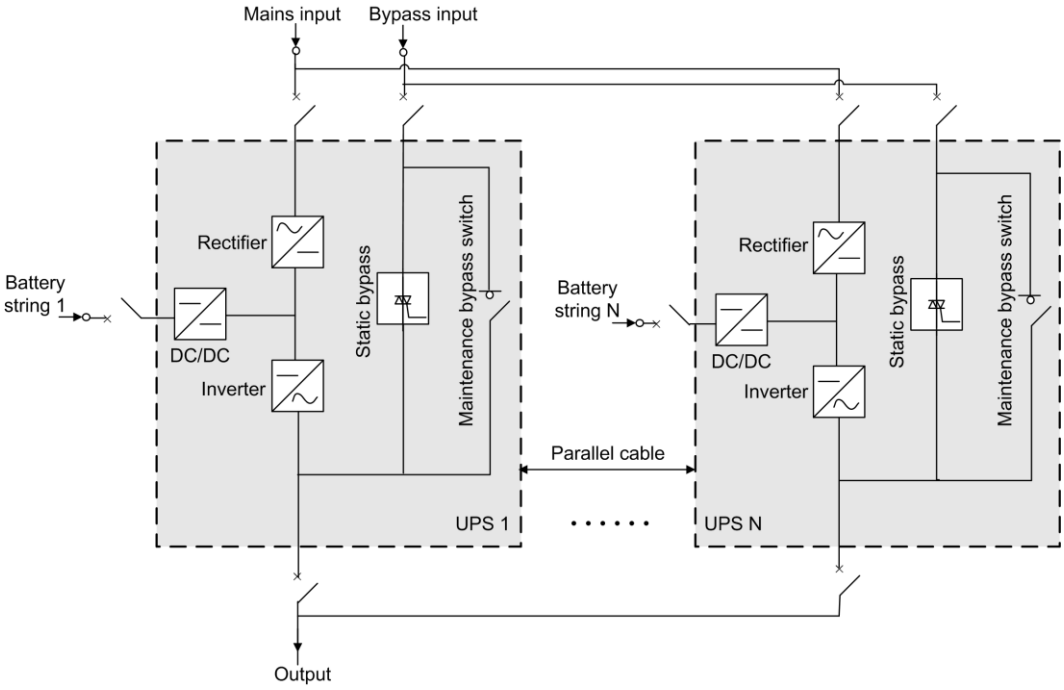

2.4.3 Dual-Bus System

A dual-bus system consists of two independent UPS systems. Each of these UPS systems in turn consists of one or more UPSs connected in parallel. Of the two UPS systems, one is a master system, and the other is a slave system. This design makes the dual-bus system highly reliable and suitable for loads with multiple input terminals. An optional static transfer switch (STS) can be installed to start the bus synchronization controller (BSC). The UPS systems work in normal mode or bypass mode. Figure 2-25 shows a conceptual diagram of a dual-bus system.

Copyright © Huawei Technologies Co., Ltd.

Figure 2-25 Conceptual diagram of a dual-bus system

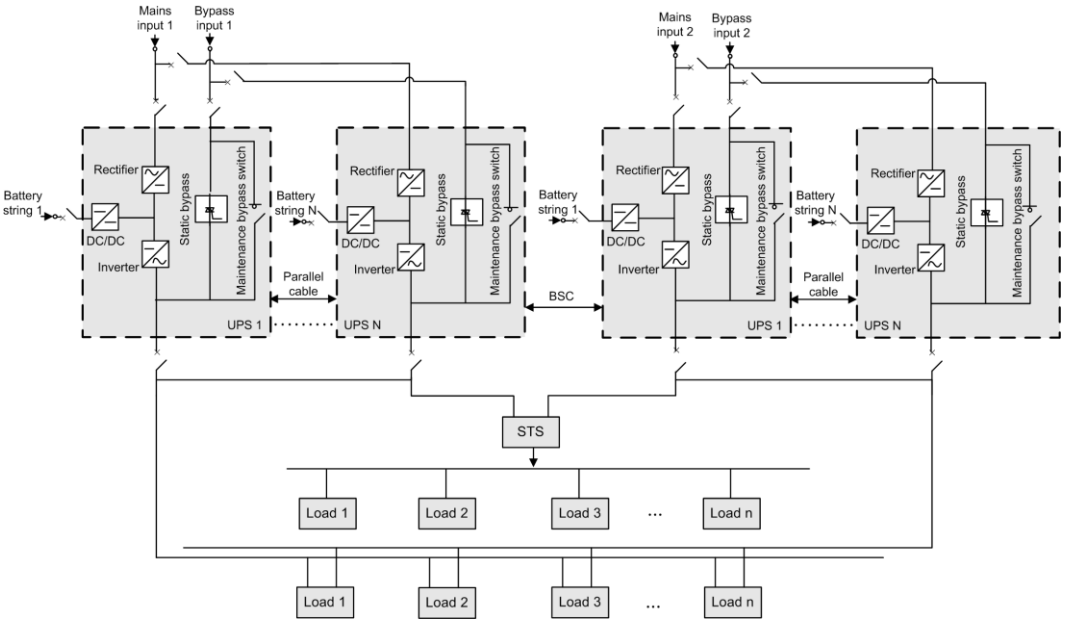

2.5 Optional Components

Component	Model	Function
BCB box	• PDC-0250DC0384BXA • PDC-0400DC0384BXA • PDC-0630DC0384BXA • PDU8000-0125DCV8-BXA001 • PDU8000-0250DCV8-BXA001 • PDU8000-0400DCV8-BXA001 • PDU8000-0630DCV8-BXA001 • PDU8000-0800DCV8-BXA001	• Controls the connection between battery strings and the UPS. • Provides overload protection, short-circuit protection, and remote trip control.
Battery bus bar (BBB) box	• PDU8000-0630DCV8-BGA001 • PDU8000-1250DCV8-BGA001 • PDU8000-2000DCV8-	Converges the energy from multiple battery strings.

Copyright © Huawei Technologies Co., Ltd.

Component	Model	Function
	BGA001	
Surge protection box	N/A	Improves the UPS surge protection capability. For details, see the *UPS Surge Protection Box Quick Installation Guide (02311DJH)*.
Surge protection box subrack	N/A	Configured only when the surge protection box is used. The position for installing the surge protection box subrack and ECM expansion subrack is the same, and therefore the two types of subracks cannot be used simultaneously.
ECM extended subrack	N/A	Install this subrack when the UPS is equipped with a backfeed protection card and dry contact extended card. The position for installing the surge protection box subrack and ECM expansion subrack is the same, and therefore the two types of subracks cannot be used simultaneously.
Antiseismic kit	N/A	Reinforces the cabinet so that the cabinet meets the requirements of 9 degree seismic fortification intensity.
IP21 component	N/A	Prevents water from dropping into the cabinet, protecting the cabinet to IP21.
Top outlet kit	N/A	If you need to install the cabinet against a wall, install a top outlet kit to meet heat dissipation requirements.
Dry contact extended card	N/A	Provides extended monitoring ports: five relay output ports and five input ports.
Backfeed protection card	N/A	Detects mains and bypass backfeed and provides protection.
Battery grounding failure detector	N/A	• Detects current leakage and generates alarms. When equipped with a remote trip switch, the detector protects devices and prevents the outbreak of a fire. • Detects battery grounding failures and generates alarms when the ground leakage current exceeds the specified value.
Ambient temperature and humidity sensor	N/A	Monitors the ambient temperature and humidity, and can be applied to batteries.
iBAT 2.0	N/A	Collects battery information. It collects

Copyright © Huawei Technologies Co., Ltd.

Component	Model	Function
		battery status data from the downstream BIM groups through wireless communication, and sends the data to the ECC and the third-party network management system (NMS) through COM or PoE ports. For details, see the document delivered with the iBAT.
Parallel cable	5 m/10 m/15 m	Connects UPSs in parallel.
BSC cable	5 m/10 m/15 m/60 m	Transmits bus synchronization signals in a dual-bus system.
Top air-flow cabinet	N/A	Used to ensure heat dissipation and allows the UPS to be installed against a wall.

NOTE

- The ECM extended subrack does not support onsite installation. If you require this optional component, inform Huawei when you purchase the UPS. Huawei installs it before delivery.
- Antiseismic kits cannot be configured for the UPS5000-E-200K-FM.
- IP21 cannot be configured for the UPS5000-E-300K-SMT and UPS5000-E-200K-FM. If cables are routed in and out from the top for the UPS5000-E-200K-SM, IP21 cannot be configured.

Copyright © Huawei Technologies Co., Ltd.

3 Installation

3.1 Installation Preparations

3.1.1 Site

3.1.1.1 Weight and Dimensions

Ensure that the floor or installation support can bear the weight of the UPS5000-E, batteries, and battery racks. The weight of batteries and battery racks depends on the UPS configuration for the site. Table 3-1 lists the UPS5000-E weight.

Table 3-1 UPS weight

Model	Capacity	Weight
UPS5000-E-200K-SM	50 kVA	224 kg
	100 kVA	256 kg
	150 kVA	288 kg
	200 kVA	320 kg
UPS5000-E-200K-FM	50 kVA	254 kg
	100 kVA	286 kg
	150 kVA	318 kg
	200 kVA	350 kg
UPS5000-E-300K-SM/ UPS5000-E-300K-SMT	50 kVA	250 kg
	100 kVA	282 kg
	150 kVA	314 kg
	200 kVA	346 kg
	250 kVA	378 kg
	300 kVA	410 kg

Copyright © Huawei Technologies Co., Ltd.

- Figure 3-1 shows the installation dimensions for the UPS5000-E-200K-SM and UPS5000-E-300K-SM/SMT.
- Figure 3-2 shows the installation dimensions for the UPS5000-E-200K-FM.

Copyright © Huawei Technologies Co., Ltd.

Figure 3-1 UPS5000-E-200K-SM and UPS5000-E-300K-SM/SMT dimensions (unit: mm)

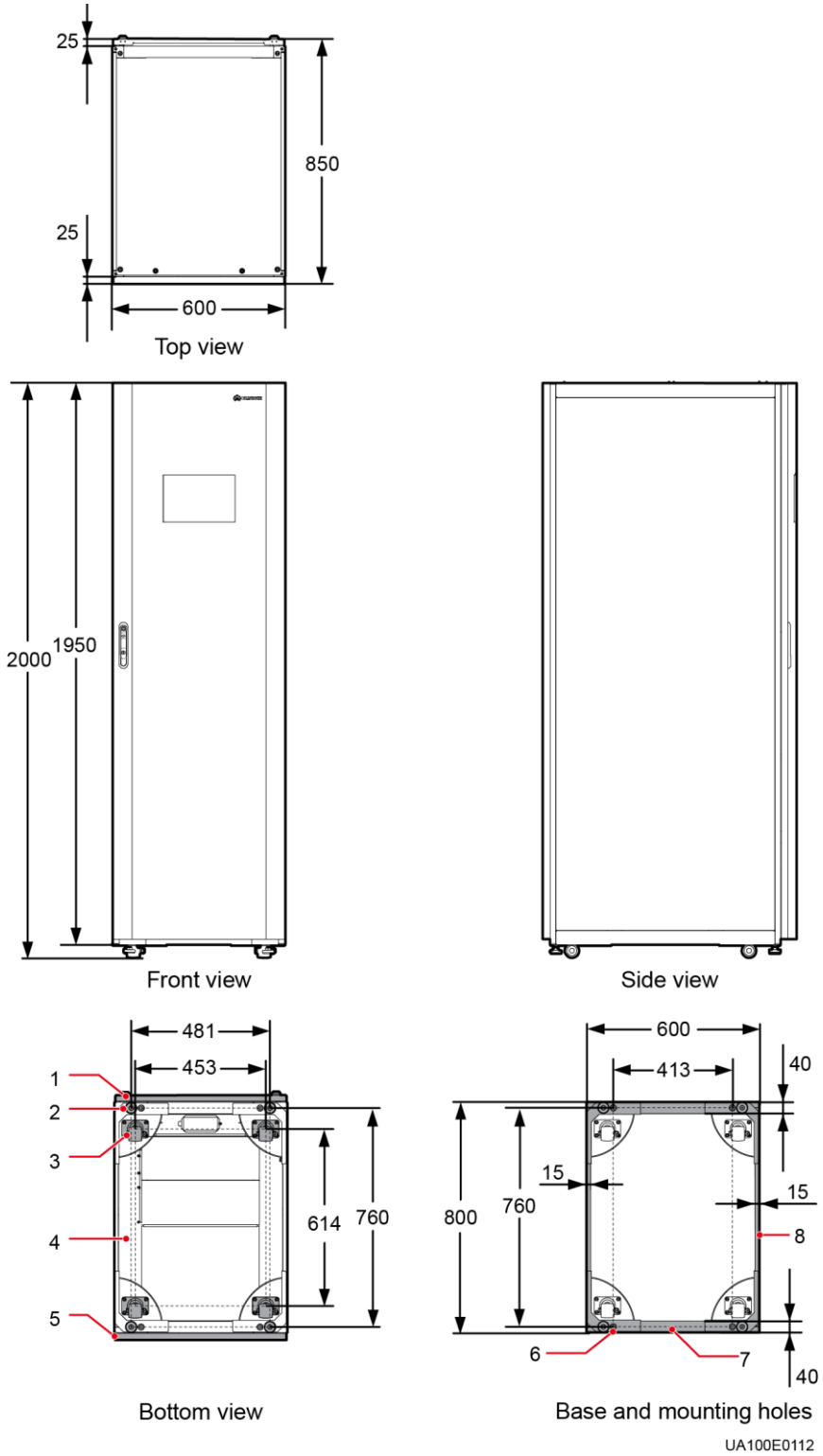

(1) Front door	(2) Foot	(3) Caster	(4) Base
(5) Rear panel	(6) Base installation hole	(7) Beam	(8) Side beam

Copyright © Huawei Technologies Co., Ltd.

Figure 3-2 UPS5000-E-200K-FM dimensions (unit: mm)

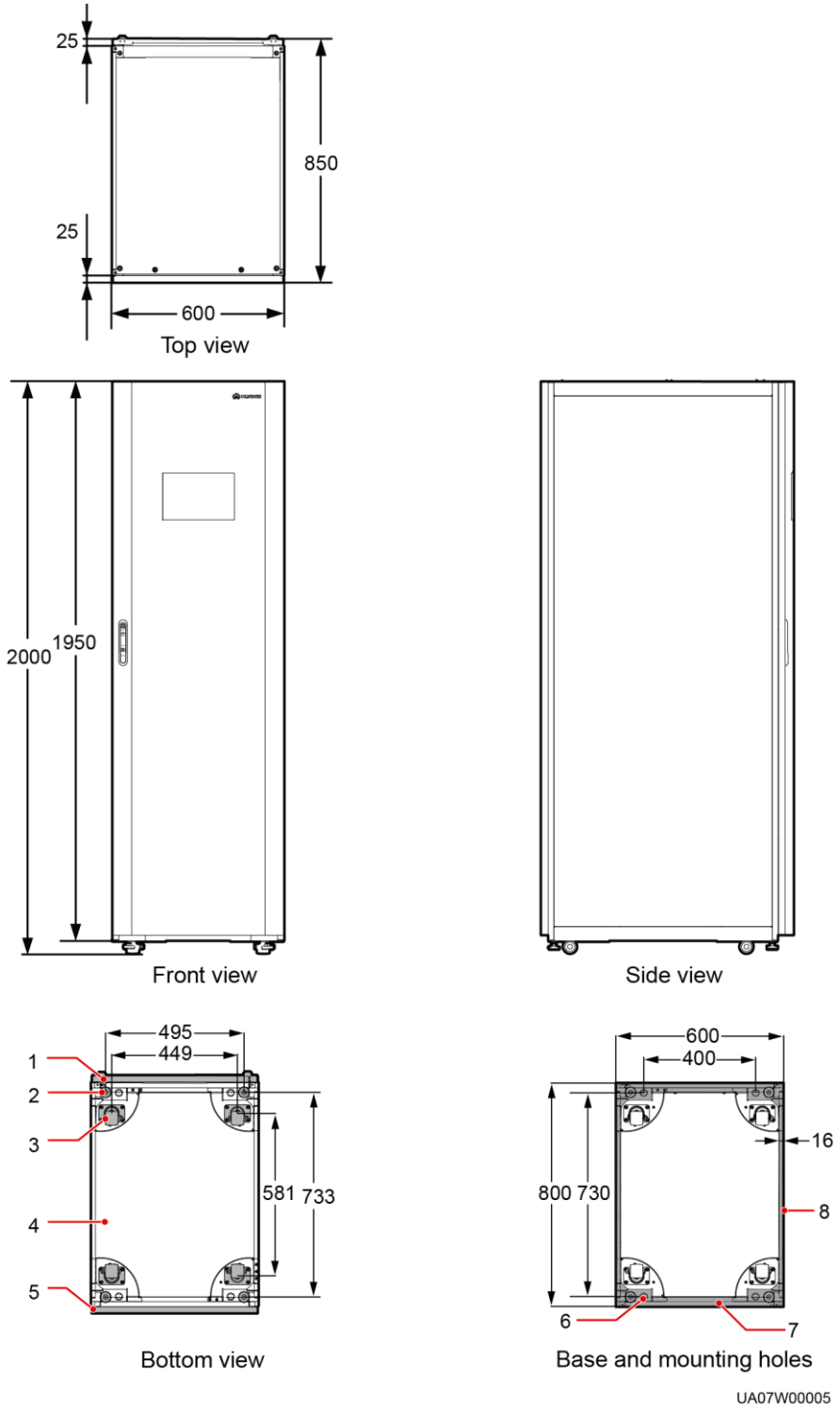

(1) Front door	(2) Foot	(3) Caster	(4) Base
(5) Rear panel	(6) Base installation hole	(7) Beam	(8) Side beam

Copyright © Huawei Technologies Co., Ltd.

3.1.1.2 Installation Environment

- Do not install the UPS in high temperature, low temperature, or damp environments. For details about environmental specifications, see chapter Technical Specifications.
- Install the UPS away from water sources, heat sources, and flammable or explosive materials. Keep the UPS away from direct sunlight, dust, volatile gases, corrosive materials, and air dense with salt particles.
- Do not install the UPS in environments with conductive metal scraps in the air.
- The optimal operating temperatures for valve-regulated lead-acid batteries (VRLA batteries) are 20–30 ℃. Operating temperatures higher than 30 ℃ shorten the battery lifespan and operating temperatures lower than 20 ℃ reduce the battery backup time.

3.1.1.3 Installation Clearances

Reserve the following clearances around the cabinet to facilitate operations and ventilation:

- Reserve at least 800 mm from the front and rear of the cabinet.
- Reserve at least 500 mm from the top of the cabinet.
- If a top air-flow cabinet is deployed, the UPS can be installed against a wall and no space needs to be reserved at the rear. If no top air-flow cabinet is deployed, at least 500 mm space should be reserved at the rear for ventilation. If the UPS will be operated from the rear, at least 800 mm space should be reserved for operations.

See Figure 3-3 as an example of the reserved clearances in an environment.

Figure 3-3 Reserved clearances (unit: mm)

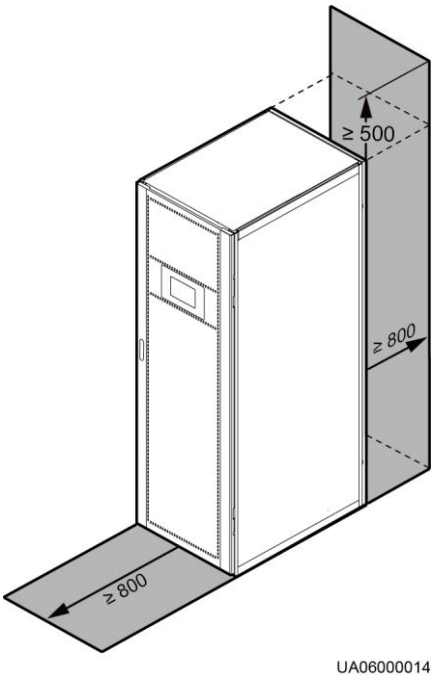

3.1.2 Tools

Copyright © Huawei Technologies Co., Ltd.

CAUTION

Insulate installation tools to prevent electric shocks.

Prepare the following tools and meters indicated in Table 3-2 for installation.

Table 3-2 Tools and meters

Tools and Meters			
Electric pallet truck	Manual pallet truck	Ladder	Rubber mallet
Hammer drill and drill bit Φ16	Hand-held electric drill	Alloy hole saw	Heat gun
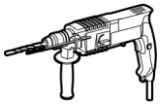	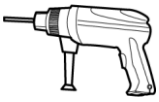	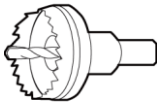	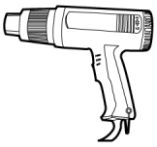
Diagonal pliers	Crimping tools	Wire stripper	Electric hydraulic pliers
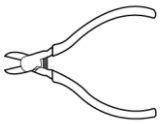	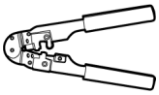	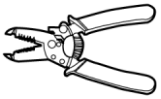	
Clamp meter	Multimeter	Cable tie	Level instrument
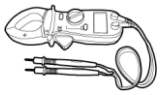			
Polyvinyl chloride (PVC) insulation tape	Cotton cloth	Label	Electrician's knife
	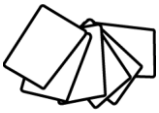	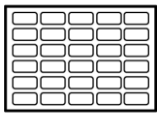	
Electrostatic discharge (ESD) gloves	Protective gloves	Insulated gloves	Insulation protective shoes

Copyright © Huawei Technologies Co., Ltd.

Tools and Meters			
Torque screwdriver	Cable cutter	Brush	Flat-head screwdriver (2–5 mm)
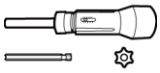	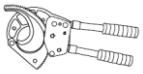		
Phillips screwdriver (M3/M4/M5/M6/M8)	Insulated torque wrench (M6/M8/M12/M16)	Heat shrink tubing	Insulated adjustable wrench
	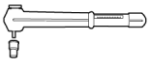		

NOTE

Table 3-2 lists only the common tools for installation and cable connection. For more dedicated tools required, see the corresponding component manuals. Prepare tools based on site requirements.

3.1.3 Preparing Power Cables

NOTICE

- The UPS can generate large leakage currents. A circuit breaker that provides leakage current protection is not recommended.
- If multiple UPSs are to be connected in parallel, input and output power cables for each UPS should have the same length and specifications.
- The TN-C system is supported when the input N and PE are connected. For the connecting method, see A (Optional) TN-C System Application.

Table 3-3 lists the recommended cross-sectional areas for power cables. Note that the currents listed are measured at a rated voltage of 380 V.

Copyright © Huawei Technologies Co., Ltd.

Table 3-3 Recommended cross-sectional areas for power cables

Item			**UPS5000-E-200K-SM/FM**				**UPS5000-E-300K-SM/SMT**	
			50 kVA	**100 kVA**	**150 kVA**	**200 kVA**	**250 kVA**	**300 kVA**
Mains input	Mains input current (A)		89	178	267	355	444	533
	Recommended cross-sectional area (mm^2)	L1	4 x 25	4 x 70	2 x (4 x 70)	2 x (4 x 95)	2 x (4 x 120)	2 x (4 x 150)
		L2						
		L3						
		N						
		PE	25	35	70	95	120	150
Bypass input	Bypass input current (A)		76	152	228	304	380	456
	Recommended cross-sectional area (mm^2)	L1	4 x 25	4 x 70	2 x (4 x 70)	2 x (4 x 95)	2 x (4 x 120)	2 x (4 x 150)
		L2						
		L3						
		N						
		PE	25	35	70	95	120	150
Output	Output current (A)		76	152	228	304	380	456
	Recommended cross-sectional area (mm^2)	U	4 x 25	4 x 70	2 x (4 x 70)	2 x (4 x 95)	2 x (4 x 120)	2 x (4 x 150)
		V						
		W						
		N						
		PE	25	35	70	95	120	150
Battery input	Battery nominal discharge current (A)		110	219	329	439	548	658
	Battery maximum discharge current (A)		131	263	394	525	657	788
	Recommended cross-sectional area (mm^2)	+	3 x 35	3 x 95	2 x (3 x 95)	2 x (3 x 120)	2 x (3 x 150)	2 x (3 x 185)
		N						
		-						
		PE	35	50	95	120	150	185

Copyright © Huawei Technologies Co., Ltd.

- When selecting, connecting, and routing power cables, follow local safety regulations and rules.
- When the external conditions change, for example, the cable layout or ambient temperatures, perform verification in accordance with the IEC-60364-5-52 or the local regulations.
- If the rated voltage is 400 V, multiply the currents by 0.95. If the rated voltage is 415 V, multiply the currents by 0.92.
- When the primary loads are non-linear loads, increase the cross-sectional areas of the neutral wires 1.5–1.7 times.
- The nominal battery discharge current refers to the current of forty 12 V batteries at 480 V in standard configuration.
- The maximum battery discharge current refers to the current when forty 12 V batteries in standard configuration, that is, two hundred and forty 2 V battery cells (1.67 V/cell), stop discharging.
- The battery cable specifications are selected based on 40 batteries by default and compatible with application scenarios with 30–46 batteries.
- When the mains input and bypass input share a power source, configure input power cables as mains input power cables. In addition, cables listed in Table 3-3 apply only to the following conditions:
  - 200 kVA: The cables are installed along the wall or on the floor (IEC-60364-5-52 C standards). 300 kVA: The cables are routed over a ladder or bracket in a single layer (IEC60364-5-52 F standards).
  - The ambient temperature is 30 ℃.
  - The AC voltage loss is less than 3%, and the DC voltage loss is less than 1%.
  - 200 kVA: single- or multi-core 90 ℃ soft power cable with a copper conductor; 300 kVA: single-core 90 ℃ soft power cable with a copper conductor.
  - It is recommended that the 200 kVA AC power cable should not be longer than 30 meters and the DC power cable should not be longer than 40 meters. The 300 kVA AC power cable should not be longer than 30 meters and the DC power cable should not be longer than 50 meters.

Table 3-4 and Table 3-5 list the requirements for power cable terminals of the UPS5000-E-200K-SM/FM.

Table 3-4 Power cable terminal requirements for the UPS5000-E-200K-SM

Port Description	Connection Method	Bolt Specifications	Bolt Hole Diameter	Bolt Length	Torque
Mains input	Crimped OT terminals	M10	10.5 mm	30 mm	26 N•m
Bypass input	Crimped OT terminals	M10	10.5 mm	30 mm	26 N•m
Battery input	Crimped OT terminals	M12	13.5 mm	45 mm	46 N•m
Output	Crimped OT terminals	M10	10.5 mm	30 mm	26 N•m

Copyright © Huawei Technologies Co., Ltd.

Port Description	Connection Method	Bolt Specifications	Bolt Hole Diameter	Bolt Length	Torque
PE	Crimped OT terminals	M10	10.5 mm	30 mm	26 N•m

Table 3-5 Power cable terminal requirements for the UPS5000-E-200K-FM

Port Description	Connection Method	Bolt Specifications	Bolt Hole Diameter	Bolt Length	Torque
Mains input	Crimped OT terminals	M10	10.5 mm	40 mm	26 N•m
Bypass input	Crimped OT terminals	M10	10.5 mm	40 mm	26 N•m
Battery input	Crimped OT terminals	M12	13.5 mm	60 mm	46 N•m
Output	Crimped OT terminals	M10	10.5 mm	40 mm	26 N•m
PE	Crimped OT terminals	M10	10.5 mm	30 mm	26 N•m

Table 3-6 lists the requirements for power cable terminals of the UPS5000-E-300K-SM/SMT.

Table 3-6 Power cable terminal requirements for the 300 kVA cabinet

Port Description	Recommended Connection Method	Bolt Specifications	Bolt Hole Diameter	Bolt Length	Torque
Mains input	Crimped OT terminals	M12	13.5 mm	45 mm	46 N•m
Bypass input	Crimped OT terminals	M12	13.5 mm	45 mm	46 N•m
Battery input	Crimped OT terminals	M12	13.5 mm	45 mm	46 N•m
Output	Crimped OT terminals	M12	13.5 mm	45 mm	46 N•m
PE	Crimped OT terminals	M12	13.5 mm	30 mm	46 N•m

Table 3-7 lists the recommended upstream input switch configurations for the UPS5000-E.

Copyright © Huawei Technologies Co., Ltd.

Table 3-7 Upstream input switch configurations

Upstream Input Switch	UPS5000-E-200K-SM/FM				UPS5000-E-300K-SM/SMT	
	50 kVA	100 kVA	150 kVA	200 kVA	250 kVA	300 kVA
Mains input	160 A/3P	250 A/3P	320 A/3P	400 A/3P	630 A/3P	630 A/3P
Bypass input	100 A/3P	160 A/3P	250 A/3P	400 A/3P	400 A/3P	630 A/3P

Table 3-8 Recommended upstream input and downstream output circuit breakers

Model	UPS Capacity	Component	Specifications	Manufacturer
UPS5000-E-200K-SM/FM	50 kVA	Mains input circuit breaker	T1N160 TMD R160 FFC 3P	ABB (recommended when the short-circuit current where the switch is located is less than 36 kVA.)
		Bypass input circuit breaker	T1N160 TMD R100 FFC 3P	
		Downstream output circuit breaker	T1N160 TMD R100 FFC 3P	
	100 kVA	Mains input circuit breaker	T3N250 TMD R250 FF 3P	
		Bypass input circuit breaker	T1N160 TMD R160 FFC 3P	
		Downstream output circuit breaker	T1N160 TMD R160 FFC 3P	
	150 kVA	Mains input circuit breaker	T5N400 TMA R320 FF 3P	
		Bypass input circuit breaker	T3N250 TMD R250 FF 3P	
		Downstream output circuit breaker	T3N250 TMD R250 FF 3P	
	200 kVA	Mains input circuit breaker	T5N400 TMA R400 FF 3P	
		Bypass input circuit breaker	T5N400 TMA R400 FF 3P	
		Downstream output circuit breaker	T5N400 TMA R400 FF 3P	
UPS5000-E-300K-SM/FMT	250 kVA	Mains input circuit breaker	T6N630 PR221DS-LS/I R630 FF 3P	

Copyright © Huawei Technologies Co., Ltd.

Model	UPS Capacity	Component	Specifications	Manufacturer
		Bypass input circuit breaker	T5N400 TMA R400 FF 3P	
		Downstream output circuit breaker	T5N400 TMA R400 FF 3P	
	300 kVA	Mains input circuit breaker	T6N630 PR221DS-LS/I R630 FF 3P	
		Bypass input circuit breaker	T5N630 TMA R500 FF 3P	
		Downstream output circuit breaker	T5N630 TMA R500 FF 3P	

NOTE

- The input upstream circuit breakers recommended in Table 3-8 are for reference only.
- If multiple loads are connected, specifications for branch circuit breakers must not exceed the recommended specifications.
- The circuit breaker selection principle is to protect loads and cables, and the cascading principle is to realize specific protection.

3.1.4 Unpacking and Checking

Context

NOTICE

- To prevent the UPS from falling over, secure it to a pallet truck using ropes before moving it.
- To prevent shocks or falls, move the UPS gently. After placing the UPS in the installation position, unpack it and take care to prevent scratches. Keep the UPS steady during unpacking.
- To prevent dust from settling on the UPS, leave the original plastic coat on until installation is required.

Procedure

Step 1 Use a pallet truck to transport the UPS to the installation position.

Step 2 Check the UPS packing.

Step 3 Hold the sliding plate steady. Cut and remove the binding tapes. Put down the sliding plate gently. See Figure 3-4.

Copyright © Huawei Technologies Co., Ltd.

Figure 3-4 Removing binding tapes

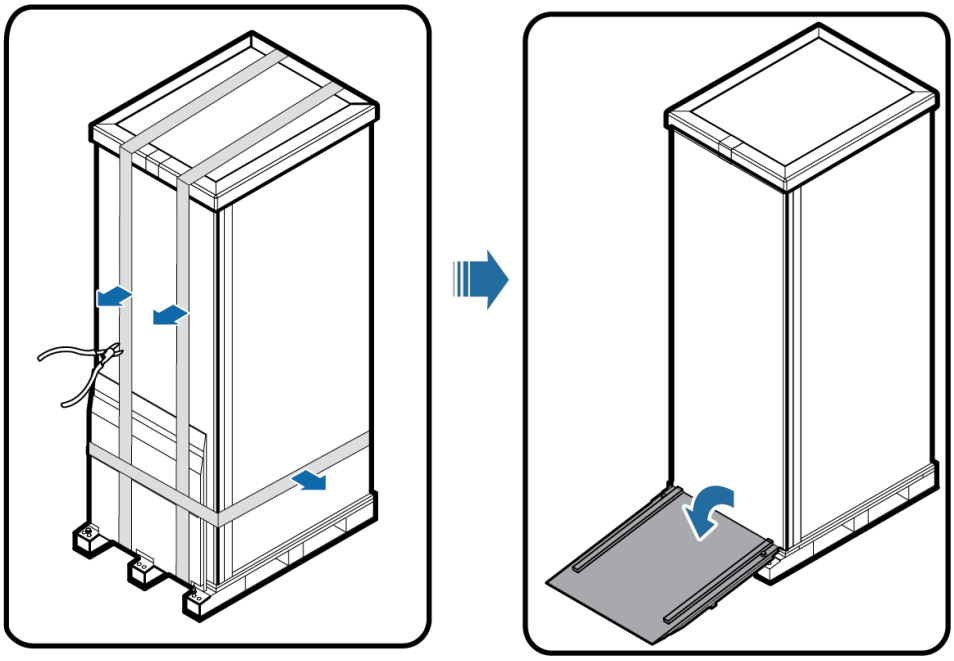

UA10000044

Step 4 Remove packing materials, as shown in Figure 3-5.

Figure 3-5 Removing packing materials

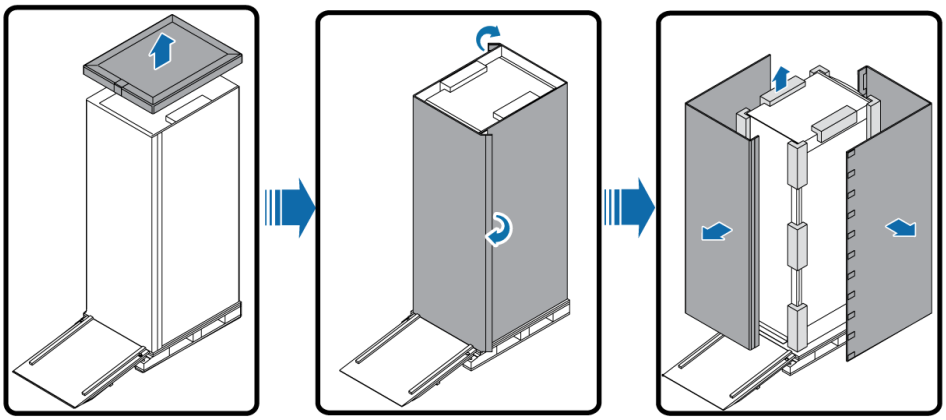

UA10000045

Step 5 Remove the plastic bag and take out the fittings box.

Step 6 Check that the UPS is intact.

1. Visually inspect the UPS appearance for shipping damage. If it is damaged, notify the carrier immediately.

Copyright © Huawei Technologies Co., Ltd.

2. Check that all fittings comply with the packing list. If some fittings are missing or do not comply with the packing list, record this information and contact your local Huawei office immediately.

Step 7 Remove the L-shaped bracket that secures the cabinet and the pallet, and secure the sliding plate to the pallet by using the two M12 screws that were removed, as shown in Figure 3-6.

Figure 3-6 Removing the L-shaped bracket

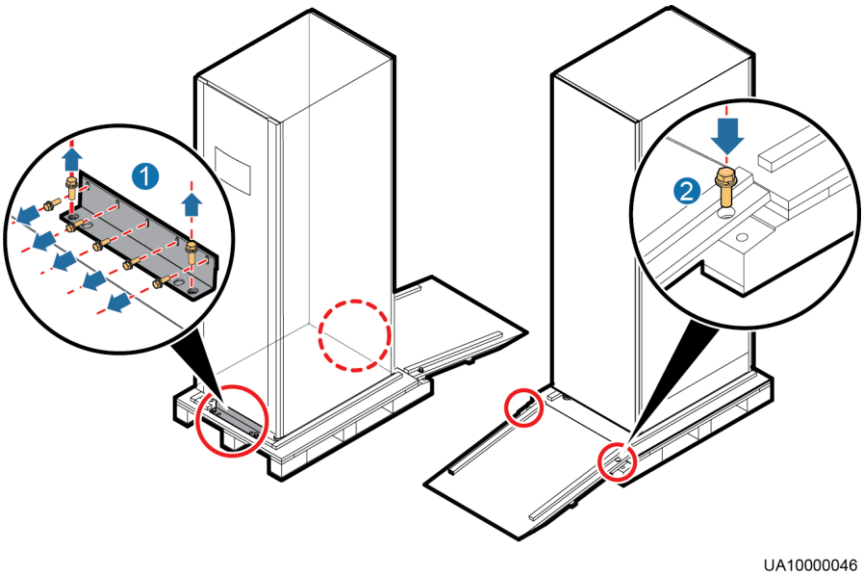

NOTE

- Tighten the two screws in step 2 in Figure 3-6. Otherwise, the slide plate may move when the UPS is removed.
- 10 screws need to be removed from each L-shaped bracket on the UPS5000-E-200K-FM.

Step 8 Raise the four anchor bolts to the highest position using an adjustable wrench, as shown in Figure 3-7.

Copyright © Huawei Technologies Co., Ltd.

Figure 3-7 Raising the leveling feet

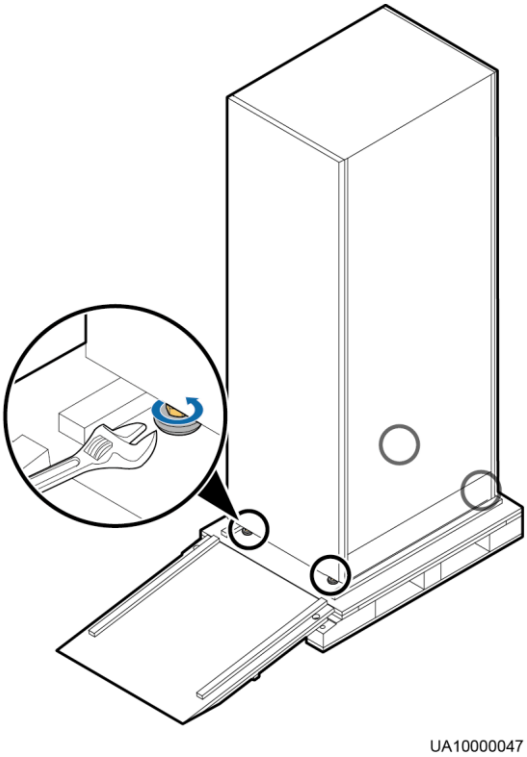

Step 9 Push the cabinet along the sliding plate to the floor.

----End

3.2 Installing a Single UPS

3.2.1 Installing the Cabinet

Secured Installation

Step 1 Determine the position for installing the cabinet. Mark mounting holes for the UPS based on the following figures:

- Figure 3-8 for the UPS5000-E-200K-SM and UPS5000-E-300K-SM/SMT
- Figure 3-9 for the UPS5000-E-200K-FM

Copyright © Huawei Technologies Co., Ltd.

Figure 3-8 UPS5000-E-200K-SM and UPS5000-E-300K-SM/SMT mounting holes positioning (unit: mm)

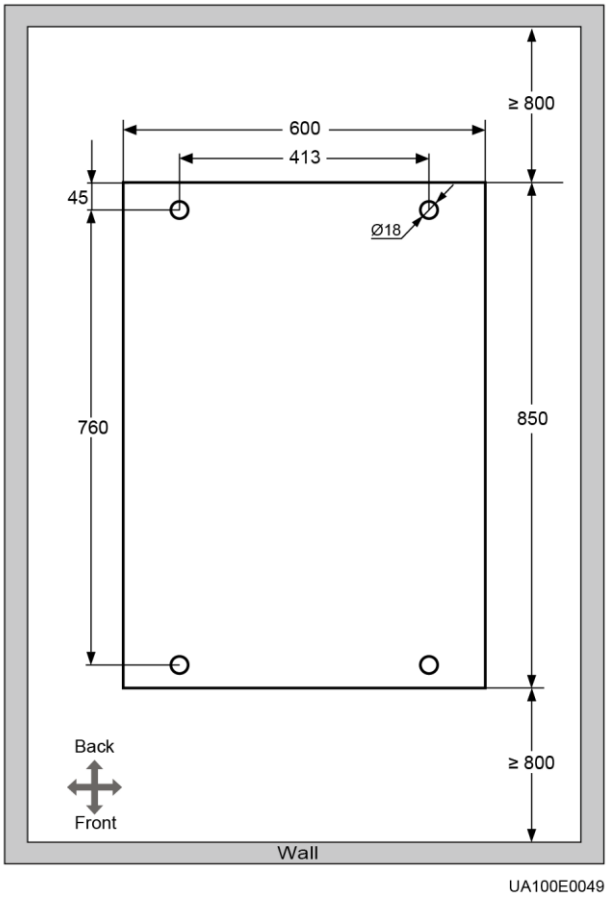

Copyright © Huawei Technologies Co., Ltd.

Figure 3-9 UPS5000-E-200K-FM mounting holes positioning (unit: mm)

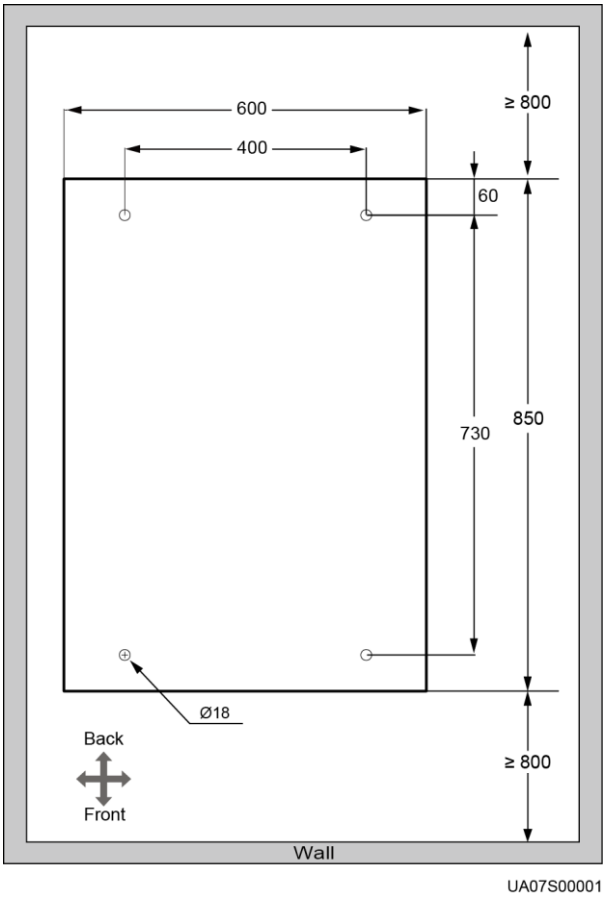

Step 2 Use a hammer drill to drill four holes for installing expansion bolts and then install four expansion bolts in the holes. Figure 3-10 shows the composition of an expansion bolt, and Figure 3-11 shows how to install an expansion bolt.

Figure 3-10 Expansion bolt composition

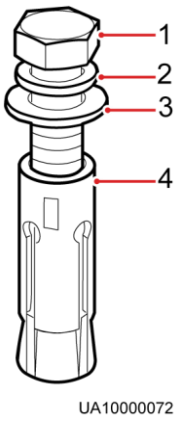

(1) M12 bolt (2) Spring washer (3) Flat washer (4) Expansion sleeve

Copyright © Huawei Technologies Co., Ltd.

NOTICE

Ensure the expansion tube of the expansion bolts fits completely into the hole. The expansion sleeves must be completely buried under the ground to properly facilitate subsequent installation.

Figure 3-11 Installing expansion bolts (unit: mm)

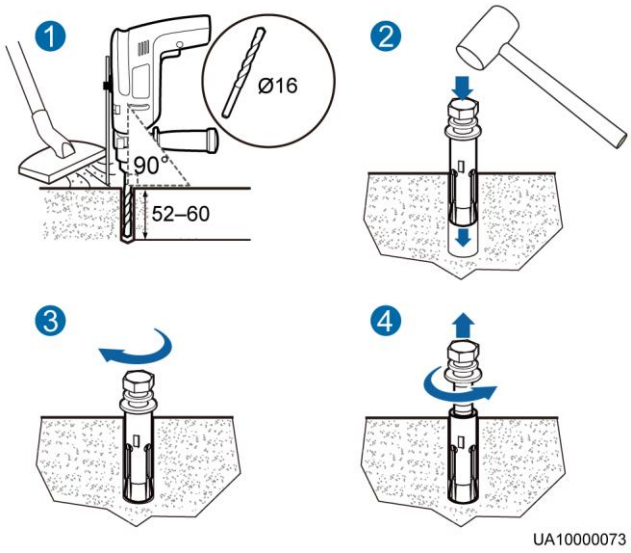

1. Drill holes in the ground by using a hammer drill. The hole depth is 52 mm to 60 mm.
2. Partially tighten the expansion bolt and vertically insert it into the hole. Hit the expansion bolt using a rubber mallet until the expansion sleeve is fully inserted into the hole.
3. Partially tighten the expansion bolt.
4. Remove the bolt, spring washer, and flat washer.

Step 3 Move the cabinet over its castors to the installation position.

Step 4 (Optional) If the castors of the UPS need to be lifted from the ground, perform steps Step 1 to Step 2 in Non-Secured Installation.

Step 5 Remove the rear panel of the cabinet, as shown in Figure 3-12, and then open the front door.

Copyright © Huawei Technologies Co., Ltd.

Figure 3-12 Removing the rear panel

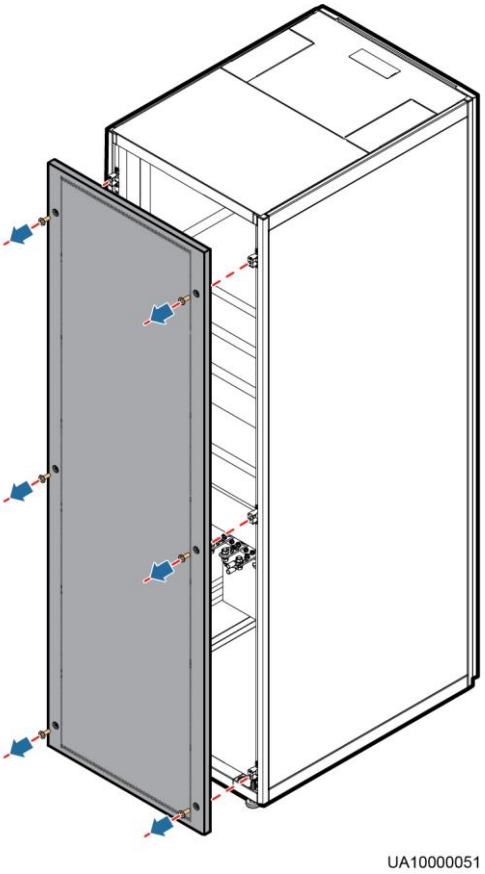

Step 6 Remove the four rubber plugs from the bottom of the cabinet (two at the front and two at the rear), as shown in Figure 3-13.

NOTE

Skip this step for the UPS5000-E-200K-FM.

Copyright © Huawei Technologies Co., Ltd.

Figure 3-13 Removing rubber plugs

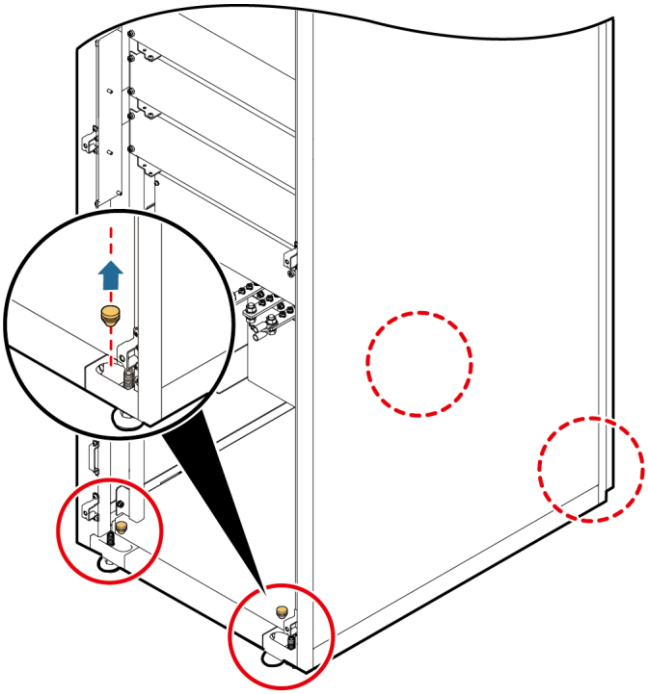

Step 7 Insert four M12 x 115 expansion bolts into the expansion bolt holes in the floor, and tighten the expansion bolts in the direction as shown in Figure 3-14.

Figure 3-14 Tightening expansion bolts

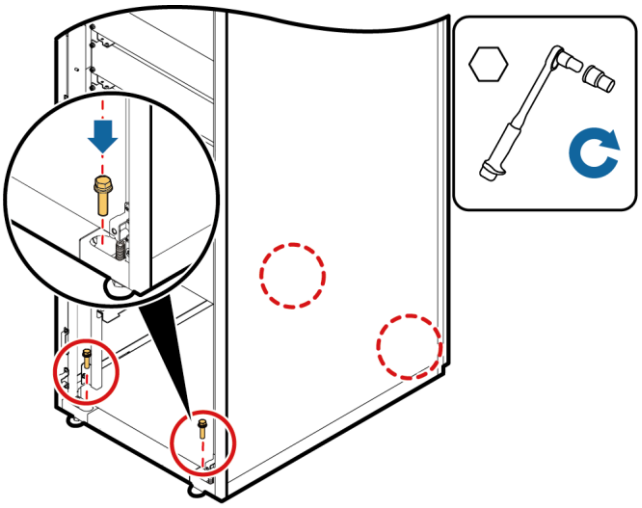

----End

Copyright © Huawei Technologies Co., Ltd.

Non-Secured Installation

Step 1 Lower the four leveling feet at the bottom of the cabinet until all the four castors at the bottom are lifted from the ground and the leveling feet bear the full cabinet weight, as shown Figure 3-15.

Figure 3-15 Castors adjustment

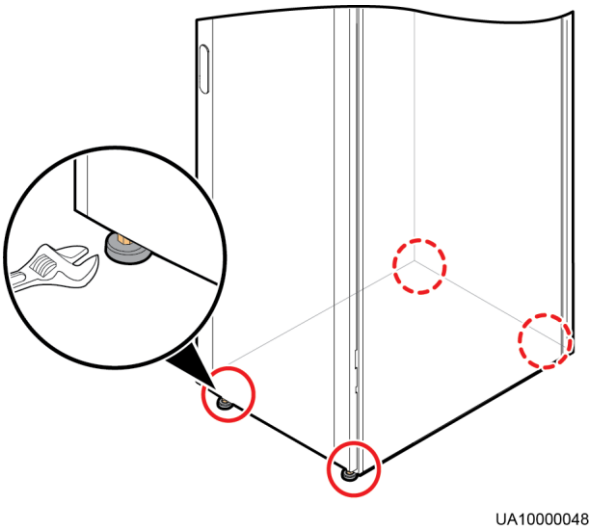

Step 2 Check whether the bottom of the cabinet is horizontal by using a level. If the cabinet is not level, adjust the leveling feet.

----End

3.2.2 Installing Batteries

Context

DANGER

- Before installing batteries, read through the battery safety precautions, obtain the delivered battery installation guide, and install batteries as instructed.
- Place the batteries in a correct way to prevent vibrations and shocks.
- Install the batteries from the lower layer to the upper layer to prevent falling over due to imbalance.

Procedure

Step 1 Install a battery rack and batteries.

For details, see the battery installation guide delivered along with batteries.

----End

Copyright © Huawei Technologies Co., Ltd.

3.2.3 Installing Optional Components

3.2.3.1 Installing Antiseismic Kits

Procedure

Step 1 Determine the UPS installation position:

- (With a marking-off template) Determine the installation positions for the antiseismic kits based on the delivered marking-off template, and mark mounting holes.
- (Without a marking-off template) Mark mounting holes based on the following figure.

Figure 3-16 Antiseismic kit mounting hole positions

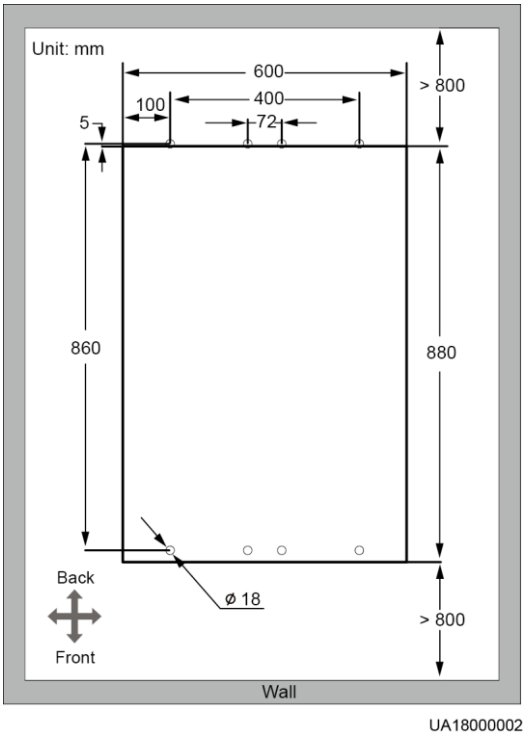

Step 2 Complete Step 2 to Step 6 in section Secured Installation under 3.2.1 Installing the Cabinet.

Step 3 Secure two antiseismic kits to the front and rear of the cabinet:

- (With a marking-off template) use twelve M5x16 and four M12 screws.

Copyright © Huawei Technologies Co., Ltd.

Figure 3-17 Securing the antiseismic kits to the cabinet (with a marking-off template)

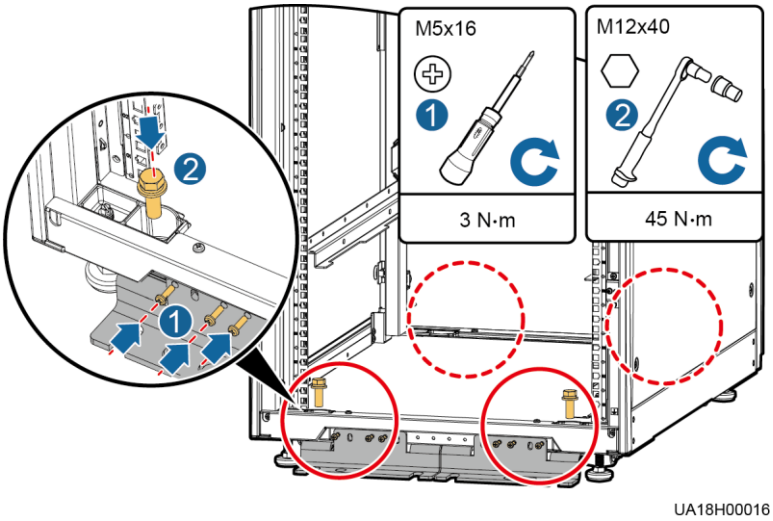

- (Without a marking-off template) use eight M6x20 and four M12 screws.

Figure 3-18 Securing the antiseismic kits to the cabinet (without a marking-off template)

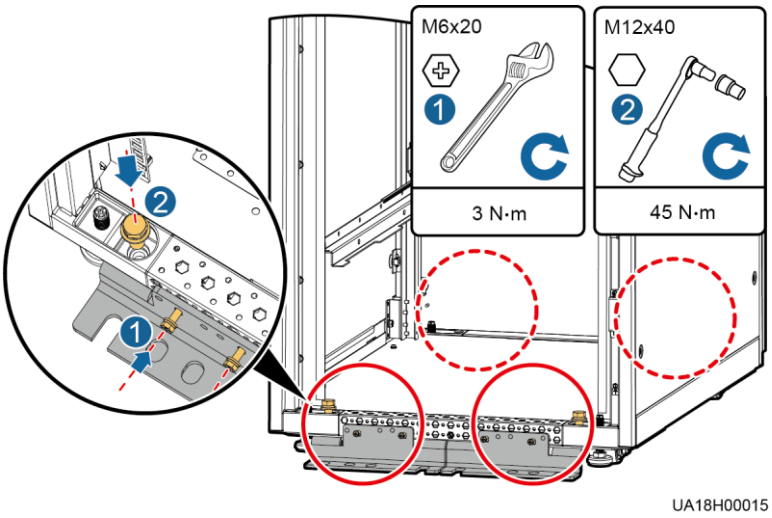

Step 4 Reinstall the rear panel.

Step 5 Adjust the cabinet position so that the expansion bolt holes are aligned with the eight holes at the bottom of the cabinet.

Step 6 Secure antiseismic kits to the floor at both the front and rear of the cabinet by using eight M12 expansion bolts. The positioning is shown in Figure 3-19.

Copyright © Huawei Technologies Co., Ltd.

Figure 3-19 Securing the antiseismic kits to the floor

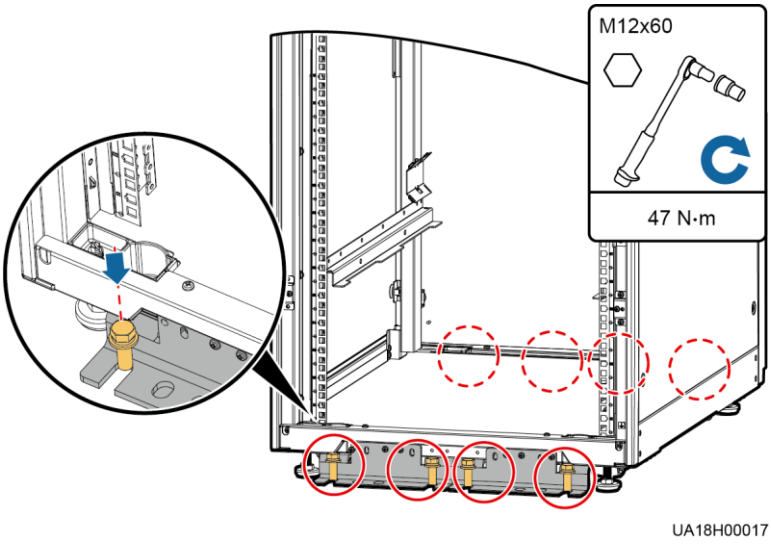

----End

3.2.3.2 Installing an IP21 Component

Procedure

Step 1 Install leveling feet at the bottom of the IP21 component, with two long feet on the front and two short feet at the rear.

NOTE

- Refer to the "front" and "back" silk screens on the surface of the IP21 component.
- Select the mounting holes for leveling feet based on the cabinet width onsite.

Figure 3-20 Installing leveling feet

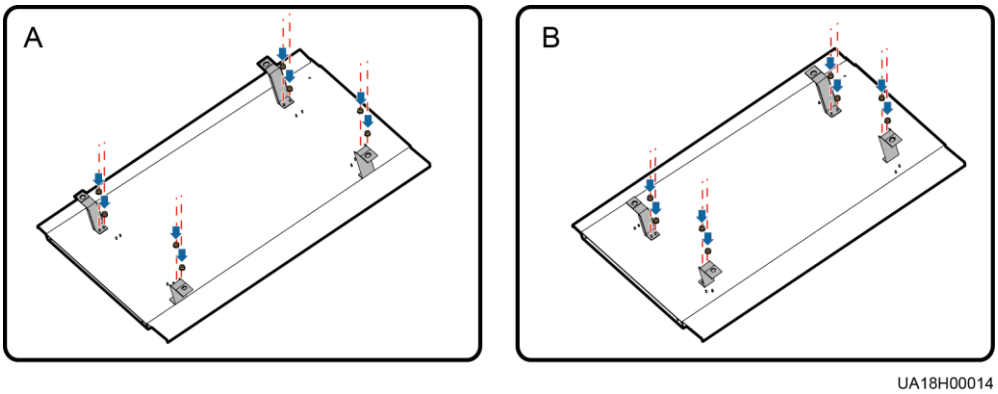

Step 2 Secure the IP21 component to the top of each cabinet using four M12 screws.

Copyright © Huawei Technologies Co., Ltd.

Figure 3-21 Installing the IP21 component

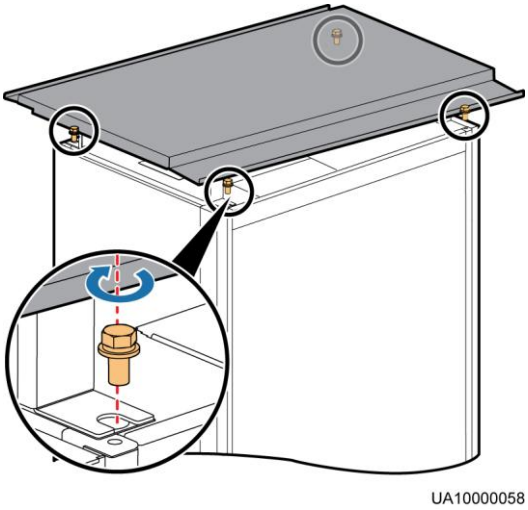

----End

3.2.3.3 Connecting an Ambient T/H Sensor

Procedure

Step 1 Connect the RJ11 port on the ambient temperature and humidity sensor (T/H sensor) to the COM1 port on the UPS monitoring interface card. For details, see *UPS Ambient Temperature and Humidity Sensor User Manual (02310NBS)*.

Figure 3-22 Connecting a UPS and an ambient T/H sensor

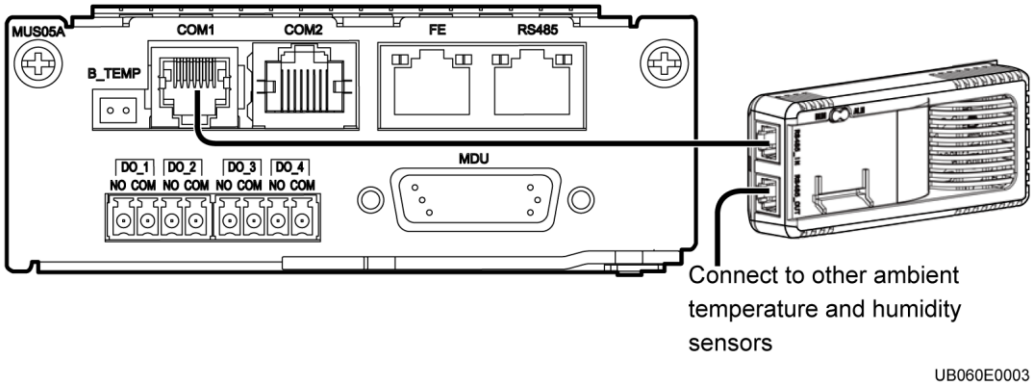

NOTE

The ambient T/H sensor can be used as a battery temperature sensor.

----End

Copyright © Huawei Technologies Co., Ltd.

3.2.3.4 Connecting the BCB box

Open the cover on the BCB box, and connect the BCB ports on the dry contact card to the control signal ports on the BCB box. For details, see the *PDC-(0250, 0400, 0630) DC0384BXA BCB Box User Manual* or *PDU8000-(0125, 0250, 0400, 0630, 0800) DCV8-BXA001 BCB Box User Manual*.

3.2.3.5 Connecting the BBB box

Connect the BBB box. For details, see the *PDU8000-(0630, 1250, 2000) DCV8-BGA001 BBB Box User Manual*.

3.2.3.6 Installing a Battery Grounding Failure Detector

Procedure

Step 1 Install a battery grounding failure detector. For the installation method, see *UPS5000 Battery Grounding Failure Detector User Manual*.

- Figure 3-23 shows the position for a battery grounding failure detector in a UPS5000–E-200K-SM.
- Figure 3-24 shows the position for a battery grounding failure detector in a UPS5000–E-200K-FM.
- Figure 3-25 shows the position for a battery grounding failure detector in a UPS5000–E-300K-SM.
- Figure 3-26 shows the position for a battery grounding failure detector in a UPS5000–E-300K-SMT.

Figure 3-23 Position of a battery grounding failure detector in a UPS5000–E-200K-SM

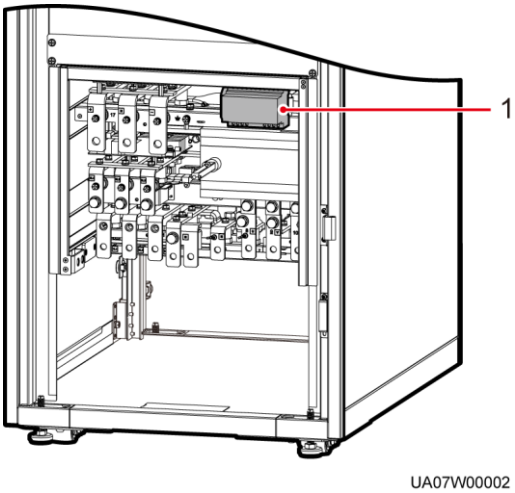

(1) Battery grounding failure detector

Copyright © Huawei Technologies Co., Ltd.

Figure 3-24 Position of a battery grounding failure detector in a UPS5000–E-200K-FM

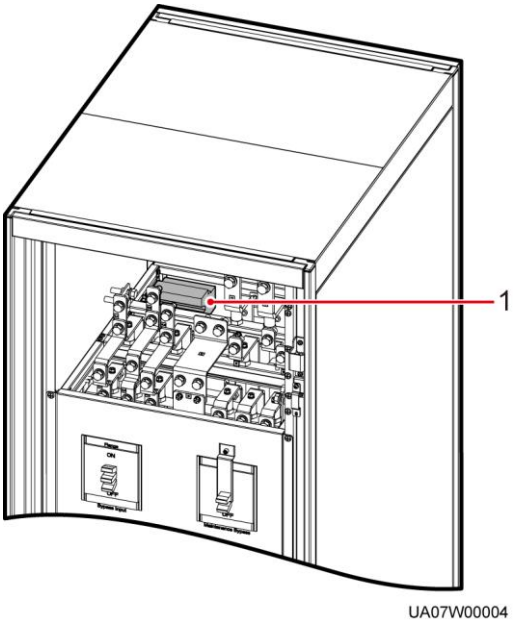

(1) Battery grounding failure detector

Figure 3-25 Position of a battery grounding failure detector in a UPS5000–E-300K-SM

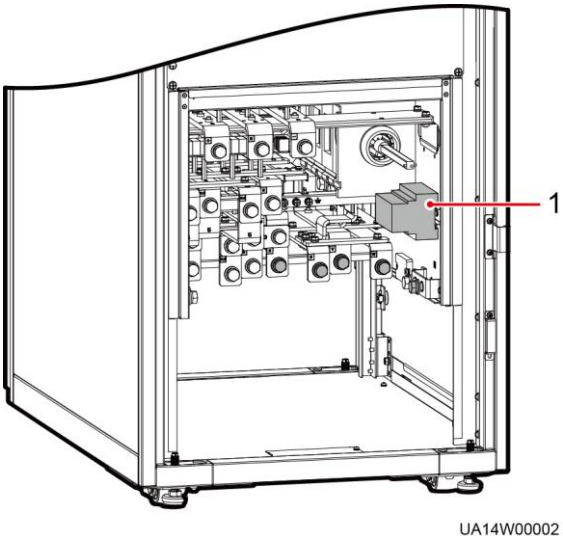

(1) Battery grounding failure detector

Copyright © Huawei Technologies Co., Ltd.

Figure 3-26 Position of a battery grounding failure detector in a UPS5000–E-300K-SMT

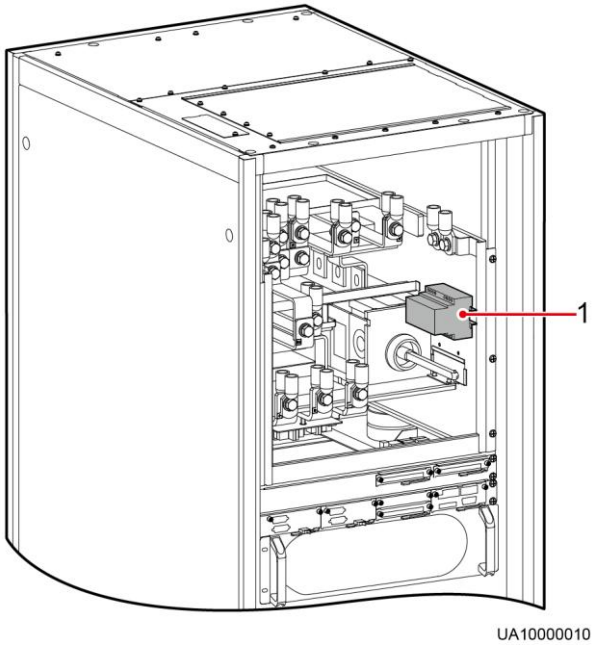

(1) Battery grounding failure detector

----End

3.2.3.7 Connecting the iBAT

Procedure

Step 1 Connect the COM_OUT port on the CIM of the iBAT to the COM2 port on the monitoring interface card. For details, see the document delivered with the iBAT.

Figure 3-27 COM2 port

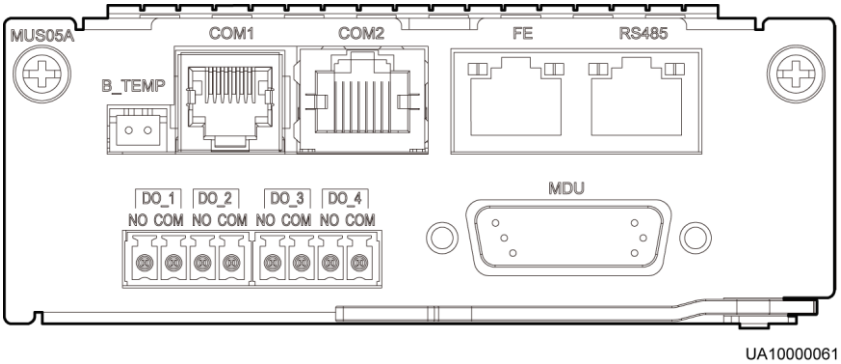

----End

Copyright © Huawei Technologies Co., Ltd.

3.2.4 UPS Cable Connection Reference

Procedure

Step 1 Route a cable into the cabinet and bind it to a nearby beam.

Step 2 Pull the cable to the copper bar to which the cable will be connected, determine the cable length, and label the cable.

- Mark a line where the cable is to be cut.
- Mark a line where the cable is to be stripped and an OT/DT terminal is to be crimped.

Step 3 Pull the cable that has been marked out of the cabinet, cut the cable from the marked position, and strip the cable and crimp an OT/DT terminal at the other marked position.

Step 4 Connect the cable with a crimped OT/DT terminal to the corresponding copper bar.

Copyright © Huawei Technologies Co., Ltd.

Figure 3-28 UPS cable connection

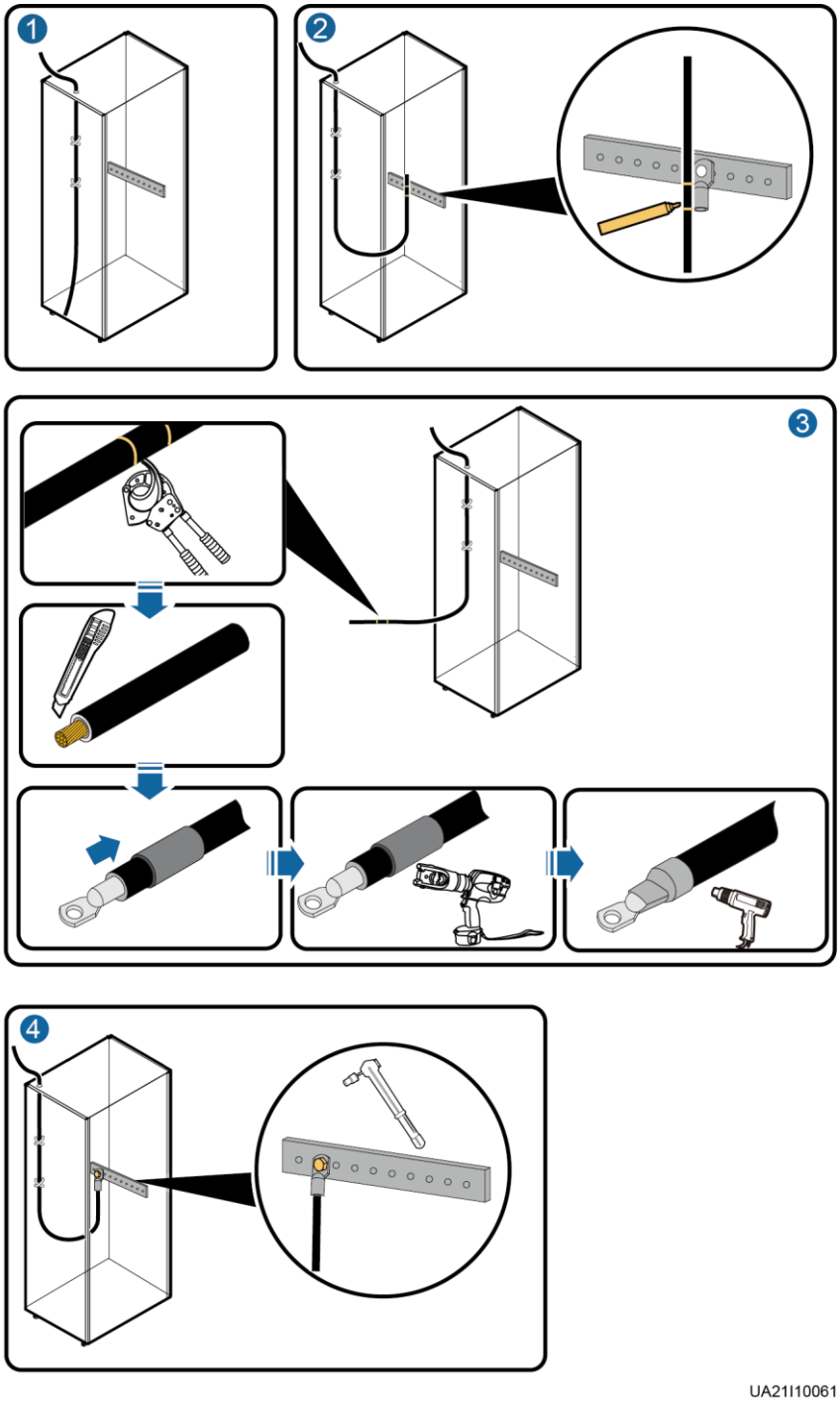

Step 5 Clean foreign matter inside the cabinet.

----End

Copyright © Huawei Technologies Co., Ltd.

3.2.5 Routing Cables (UPS5000-E-200K-SM)

3.2.5.1 Routing Cables from the Top

Context

NOTICE

- Route cables for the UPS from inside out and from bottom up.
- After routing cables, use firestop putty to fill in the gap between the cables and the cabinet.

Procedure

Step 1 Ensure the maintenance bypass switch is OFF. Open the front door, and remove the cover from the power distribution subrack, as shown in Figure 3-29. The positioning of the copper bars is shown in Figure 3-30

Figure 3-29 Removing the cover

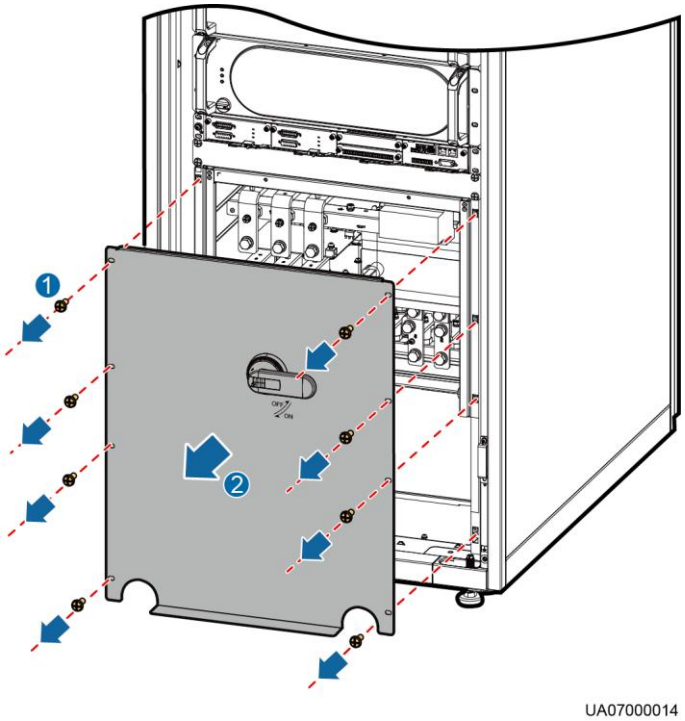

Copyright © Huawei Technologies Co., Ltd.

Figure 3-30 Copper bar positions

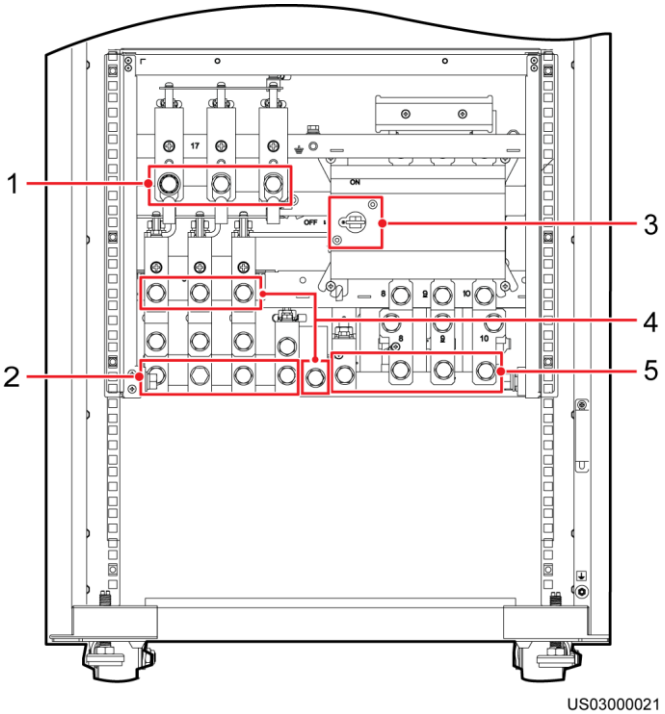

(1) Battery input terminals (+, N, –)	(2) Mains input terminals (1L1–1L3, N)	(3) Maintenance bypass switch
(4) Bypass input terminals (2L1–2L3, N)	(5) Output terminals (U, V, W, and N)	

Step 2 Determine the cabling mode.

NOTE

Remove small covers or drill holes on the large cover to route cables based on site conditions.

- Remove the cable cover from the top of the cabinet for cable routing.

  Remove the small covers from the top of the cabinet, as shown in Figure 3-31.

Copyright © Huawei Technologies Co., Ltd.

Figure 3-31 Removing the cable covers from the top of the cabinet

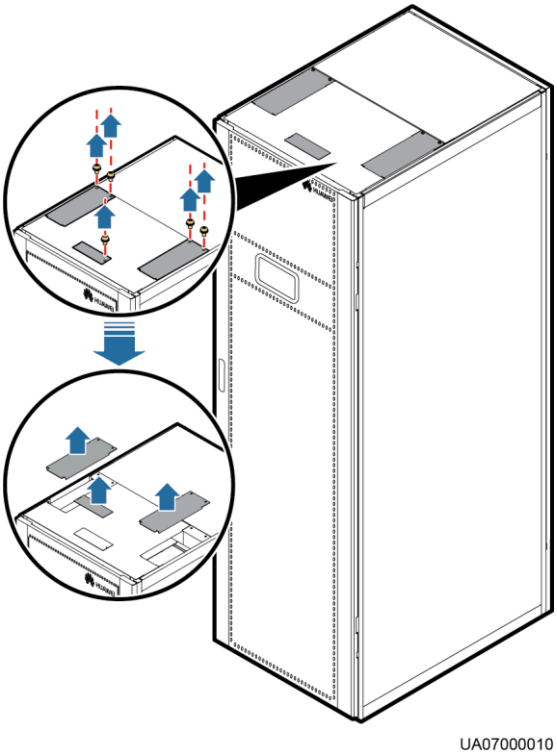

- Drill holes for routing cables.

  Remove the cable cover for signal cables from the cabinet, and drill holes on the middle large cover based on the number and diameter of cables, as shown in Figure 3-32.

NOTE

Remove the cover and then drill holes. If holes are drilled for routing cables, attach grommet strips to the hole edges to protect cables.

Copyright © Huawei Technologies Co., Ltd.

Figure 3-32 Drilling holes on the top cover

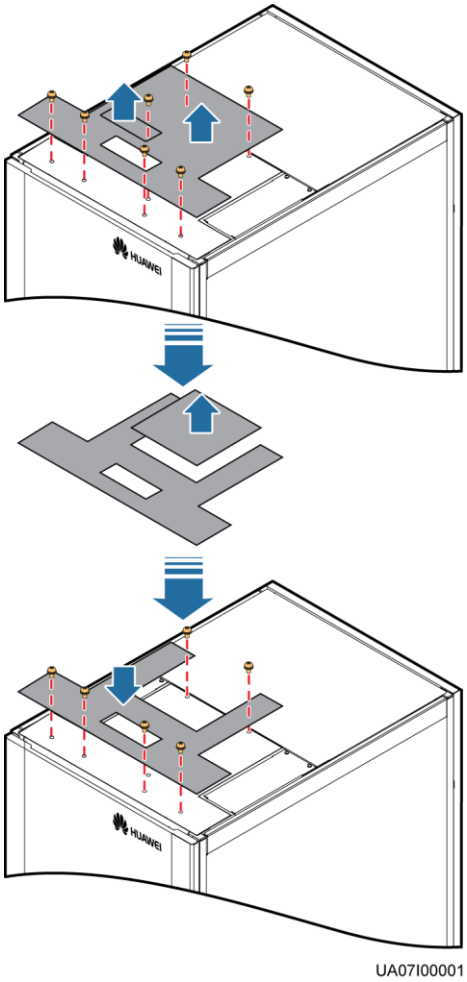

Step 3 Connect ground cables, as shown in Figure 3-33.

Copyright © Huawei Technologies Co., Ltd.

NOTICE

- Ensure that all UPS upstream input switches are turned off before connecting cables.
- Determine the actual number of ground cables based on Table 3-3 and the site requirements. The following figure is for reference only.
- Prepare the OT terminals onsite to ensure that the length of the copper wire is the same as that of the part of the OT terminal that covers the conductor.

Figure 3-33 Ground cable

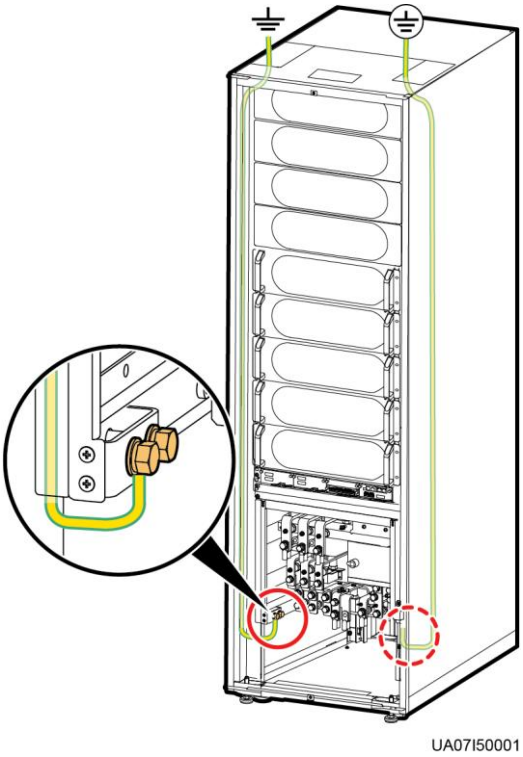

NOTE

In the figure, the wiring terminal with a circle is the primary wiring terminal that connects to the ground cable.

Step 4 Route power cables.

- Dual mains

  Remove the copper bars between mains and bypass input terminals, as shown in Figure 3-34.

Copyright © Huawei Technologies Co., Ltd.

Figure 3-34 Removing copper bars

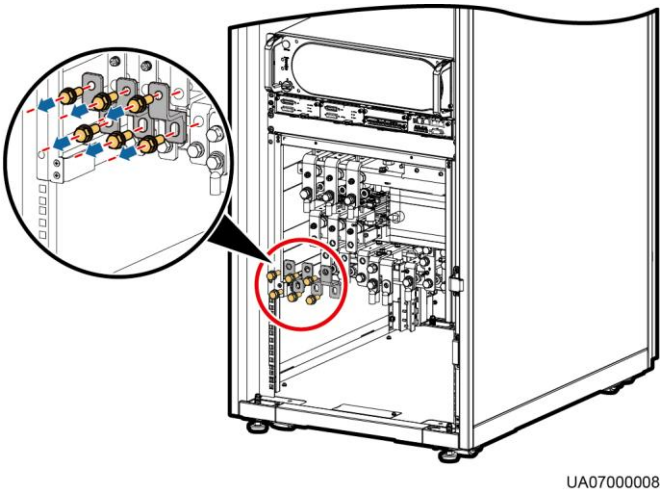

Figure 3-35 shows cables routed from the top by removing small covers, as an example.

Figure 3-35 Top cabling

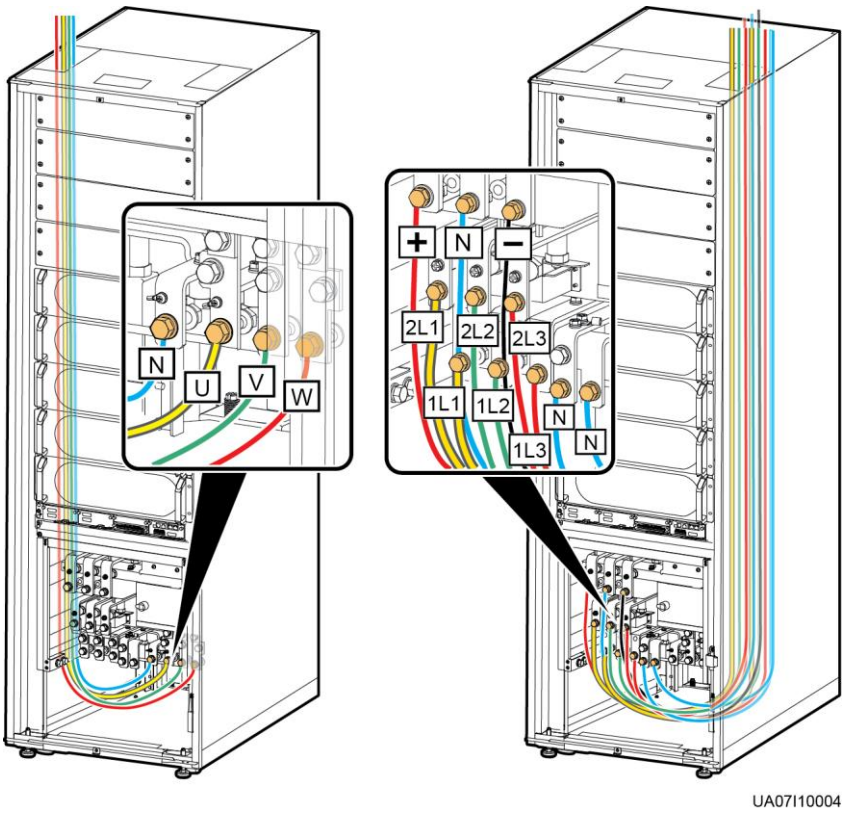

Route a neutral wire from the middle of the positive and negative battery strings.

The battery neutral wire is routed from the middle of positive and negative battery strings, each consisting of 20 batteries.

Copyright © Huawei Technologies Co., Ltd.

Figure 3-36 Neutral wire

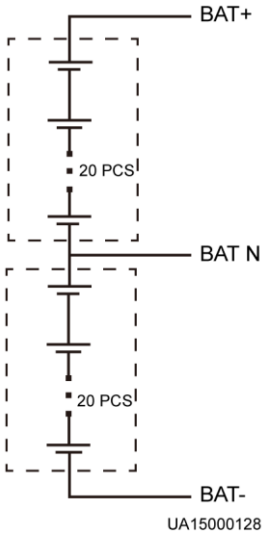

- Single mains

  For single mains, the copper bars between the mains and bypass input terminals do not need to be removed, and bypass input cables do not need to be connected.

Step 5 Route the signal cables on the left sideof subracks along the left side of the cabinet and the cables on the right side of subracks along the right side of the cabinet, and then bind the cables to the cabinet, as shown in Figure 3-37.

Copyright © Huawei Technologies Co., Ltd.

Figure 3-37 Connecting signal cables

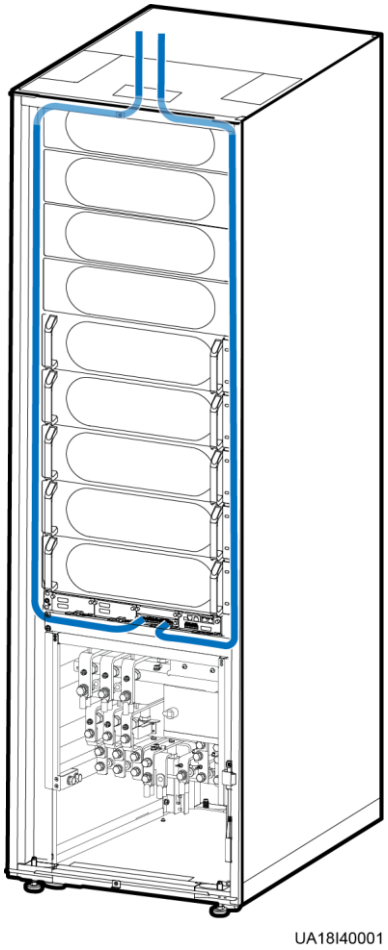

NOTE

The number and colors of signal cables in Figure 3-37 are for reference only.

----End

3.2.5.2 Routing Cables from the Bottom

Context

Copyright © Huawei Technologies Co., Ltd.

NOTICE

- Route cables for the UPS from inside out and from bottom up.
- After routing cables, use firestop putty to fill in the gap between the cables and the cabinet.

Procedure

Step 1 Open the front door and remove the cover from the power distribution subrack, as shown in Figure 3-29. Figure 3-30 shows the positions of copper bars.

Step 2 Determine the cabling mode.

- Remove small covers for routing cables.

  Remove the cable cover for signal cables, and remove small covers from the bottom based on site requirements, as shown in Figure 3-38.

  Figure 3-38 Removing small covers from the bottom of the cabinet

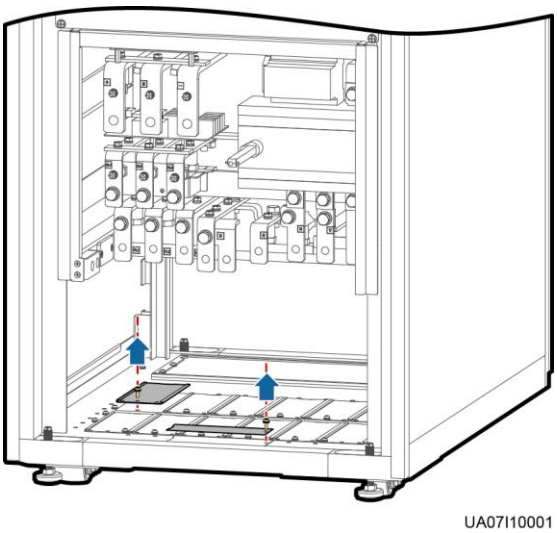

- Drill holes into the large cover for routing cables.
  a. Remove all the cable cover for signal cables and small covers from the bottom.
  b. Remove the two large covers from the bottom rear of the cabinet, drill holes into them, and install them to the positions where the small covers were originally, as shown in Figure 3-39.

Copyright © Huawei Technologies Co., Ltd.

Figure 3-39 Hole positions

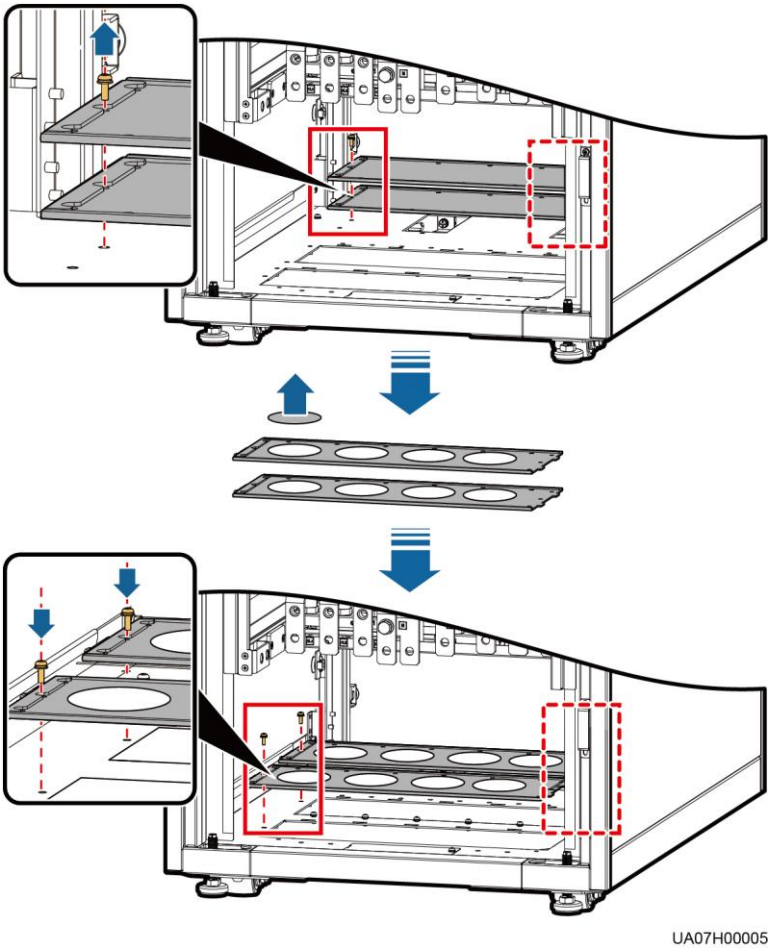

NOTE

- The quantity of holes in the above figure is for reference only.
- If holes are drilled for routing cables, attach grommet strips on the hole edges to protect cables.

c. Reinstall the removed two small covers on the holes at the rear bottom of the cabinet, as shown in Figure 3-40.

Figure 3-40 Installing small covers

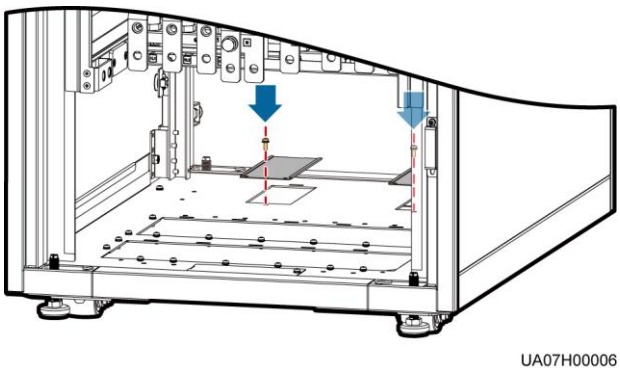

Copyright © Huawei Technologies Co., Ltd.

Step 3 Connect ground cables, as shown in Figure 3-41.

Figure 3-41 Ground cable connection

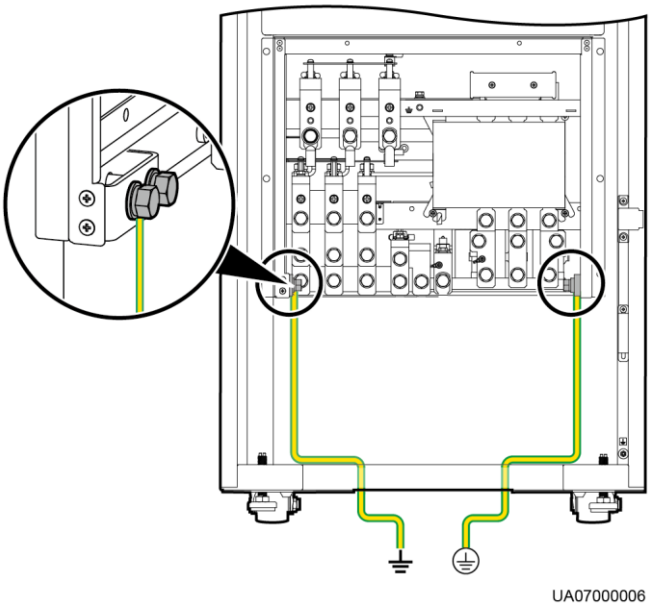

NOTE

In the figure, the wiring terminal with a circle is the primary wiring terminal that connects to the ground cable.

Step 4 Route power cables.

- Dual mains

  Remove the copper bars between mains and bypass input terminals, as shown in Figure 3-34.

  Figure 3-42 shows power cables routed from the bottom by removing small covers, as an example.

Copyright © Huawei Technologies Co., Ltd.

Figure 3-42 Bottom cabling

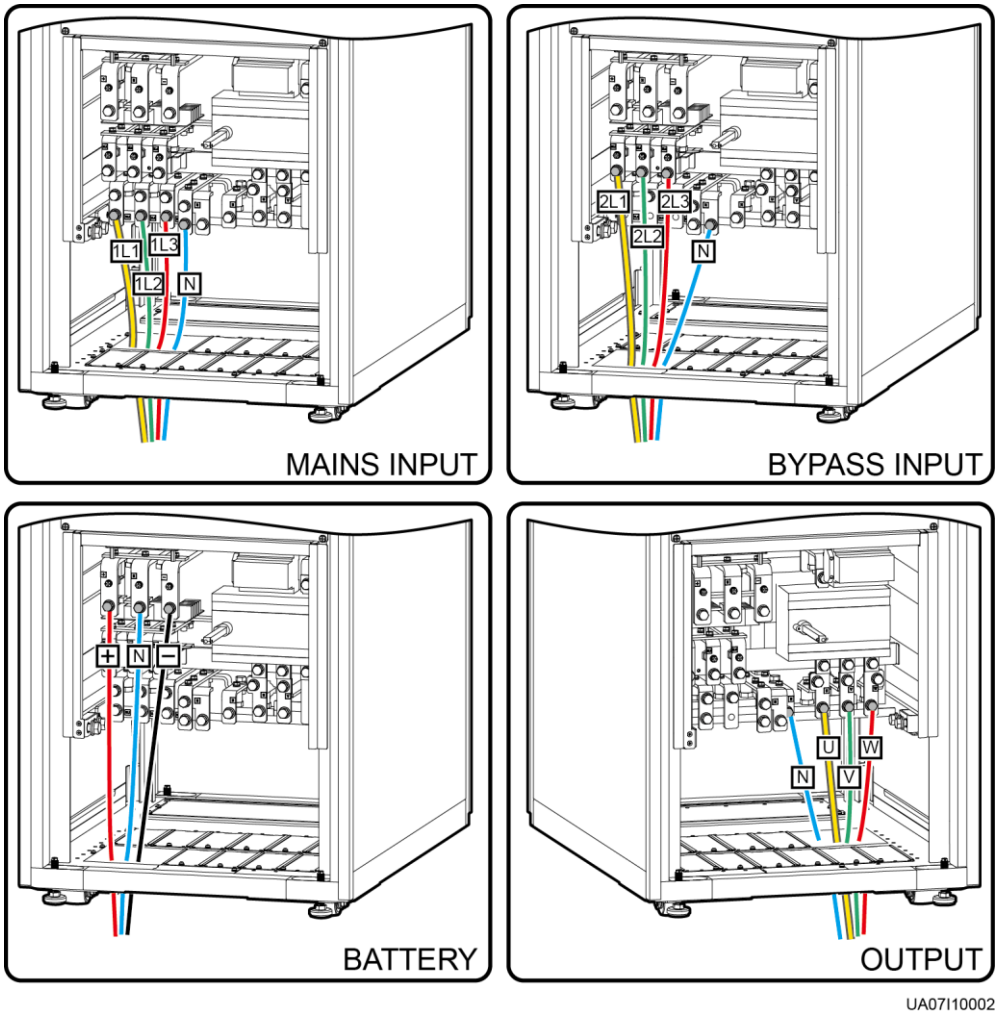

- Single mains

  For single mains, the copper bars between the mains and bypass input terminals do not need to be removed, and bypass input cables do not need to be connected.

Step 5 Route the signal cables on the left sideof subracks along the left side of the cabinet and the cables on the right side of subracks along the right side of the cabinet, and then bind the cables to the cabinet, as shown in Figure 3-43.

Copyright © Huawei Technologies Co., Ltd.

Figure 3-43 Connecting signal cables

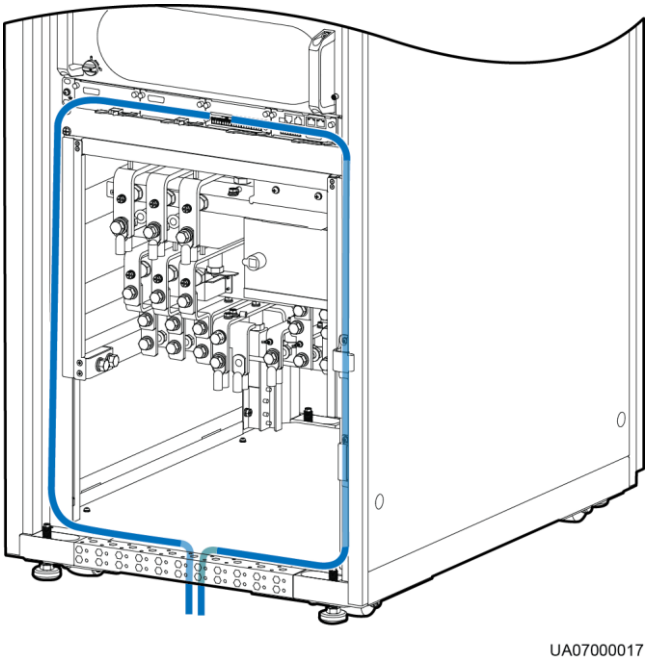

NOTE

The number and colors of signal cables in Figure 3-43 are for reference only.

----End

3.2.6 Routing Cables (UPS5000-E-200K-FM)

3.2.6.1 Routing Cables from the Top

Context

NOTICE

- Route cables for the UPS from inside out and from bottom up.
- After routing cables, use firestop putty to fill in the gap between the cables and the cabinet.

Procedure

Step 1 Open the front door and remove the cover from the power distribution subrack, as shown in Figure 3-44. Figure 3-45 shows the positions of copper bars.

Copyright © Huawei Technologies Co., Ltd.

Figure 3-44 Removing the cover

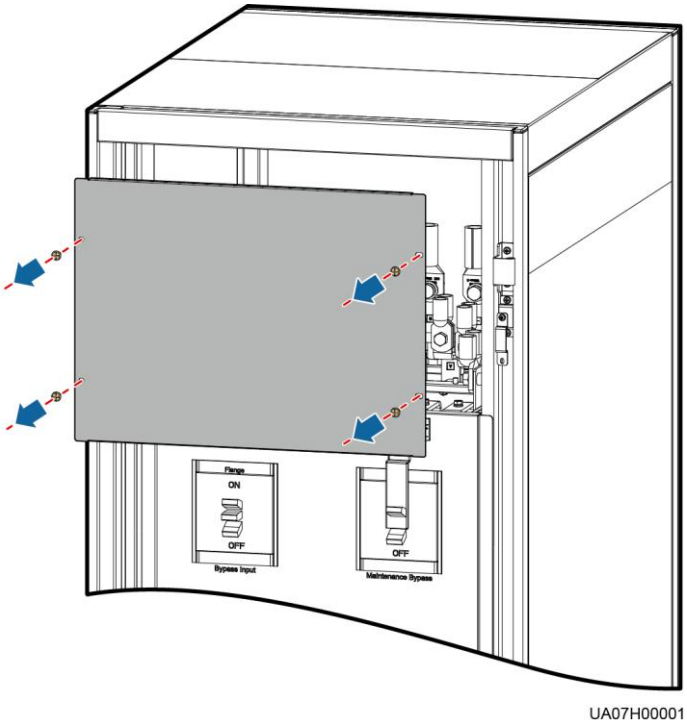

Copyright © Huawei Technologies Co., Ltd.

Figure 3-45 Copper bar positions

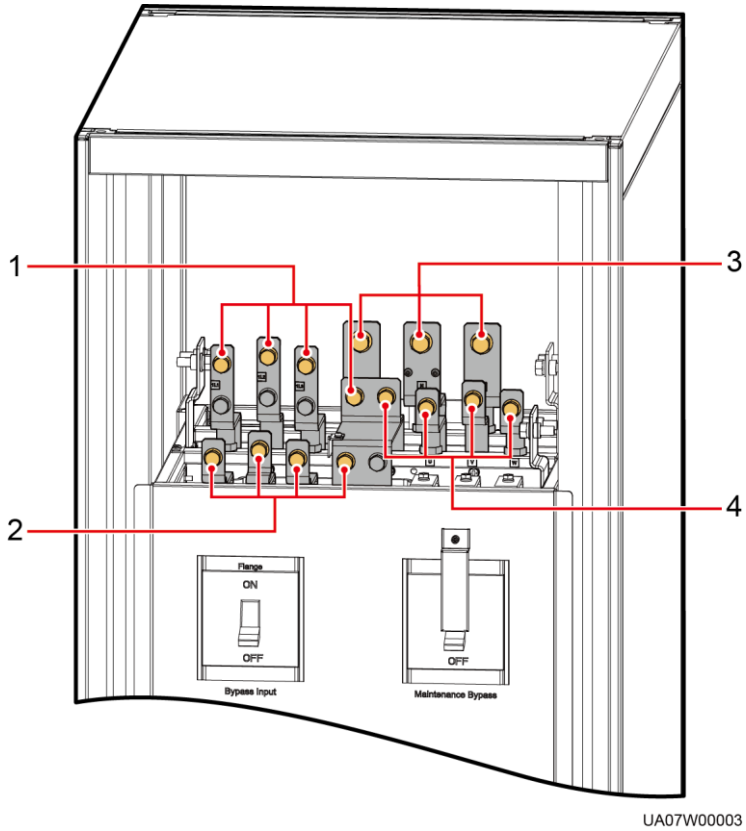

(1) Mains input terminals (1L1–1L3, N)

(2) Bypass input terminals (2L1–2L3, N)

(3) Battery input terminals (+, N, –)

(4) Output terminals (U, V, W, and N)

Step 2 Determine the cabling mode.

- Remove small covers for routing cables.

  Take out the cable cover for signal cables, and remove small covers from the top based on site requirements, as shown in Figure 3-46.

Copyright © Huawei Technologies Co., Ltd.

Figure 3-46 Removing small covers from the top of the cabinet

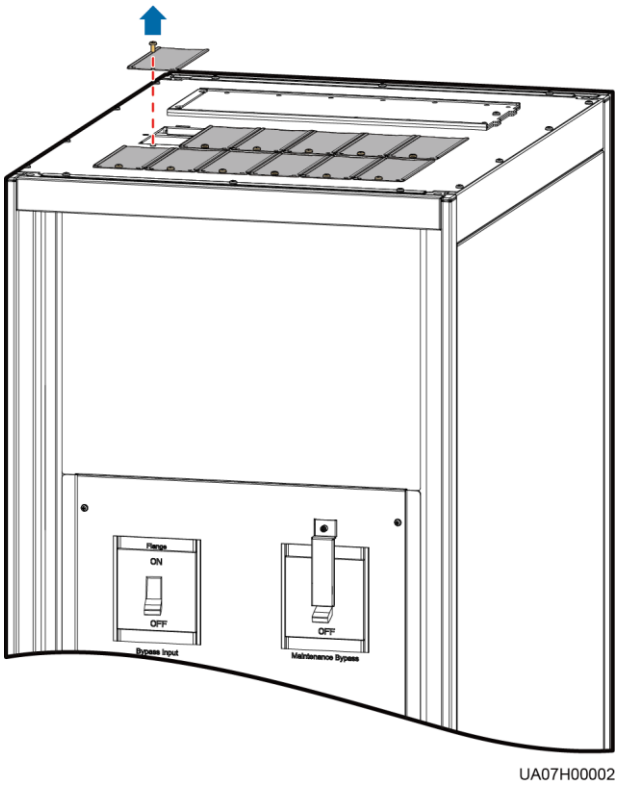

- Drill holes into the large cover for routing cables.
  a. Remove the cable cover for signal cables and small covers from the top.
  b. Remove the two large covers from the rear top of the cabinet, drill holes into them, and install them to the positions where the small covers were placed, as shown in Figure 3-47.

Copyright © Huawei Technologies Co., Ltd.

Figure 3-47 Hole positions

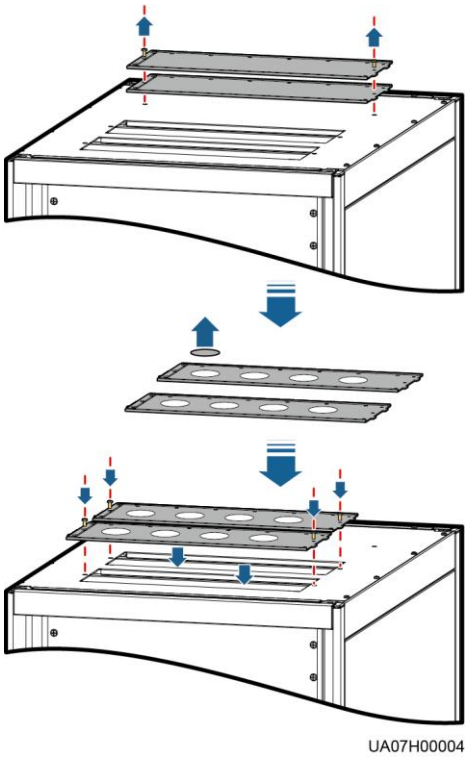

NOTE

- The quantity of holes in the above figure is for reference only.
- If holes are drilled for routing cables, attach grommet strips to the hole edges to protect cables.

Step 3 Connect ground cables, as shown in Figure 3-48.

Copyright © Huawei Technologies Co., Ltd.

NOTICE

- Ensure that all UPS upstream input switches are turned off before connecting cables.
- Determine the actual number of ground cables based on Table 3-3 and the site requirements. The following figure is for reference only.
- Prepare the OT terminals onsite to ensure that the length of the copper wire is the same as that of the part of the OT terminal that covers the conductor.

Figure 3-48 Ground cable connection

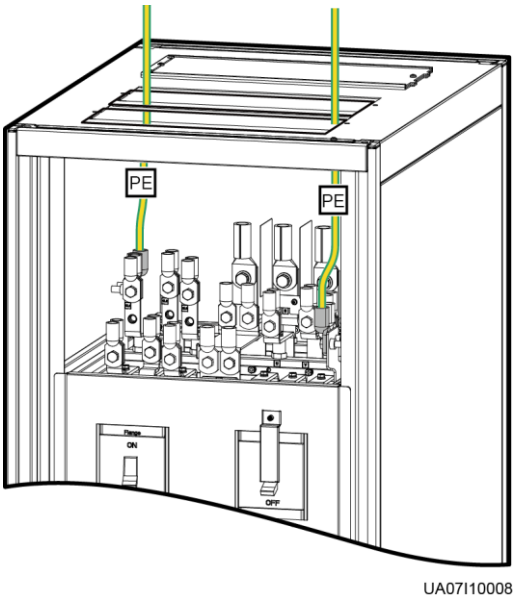

Step 4 Route power cables.

- Dual mains

  Remove the copper bars between mains and bypass input terminals, as shown in Figure 3-49.

Copyright © Huawei Technologies Co., Ltd.

Figure 3-49 Removing copper bars

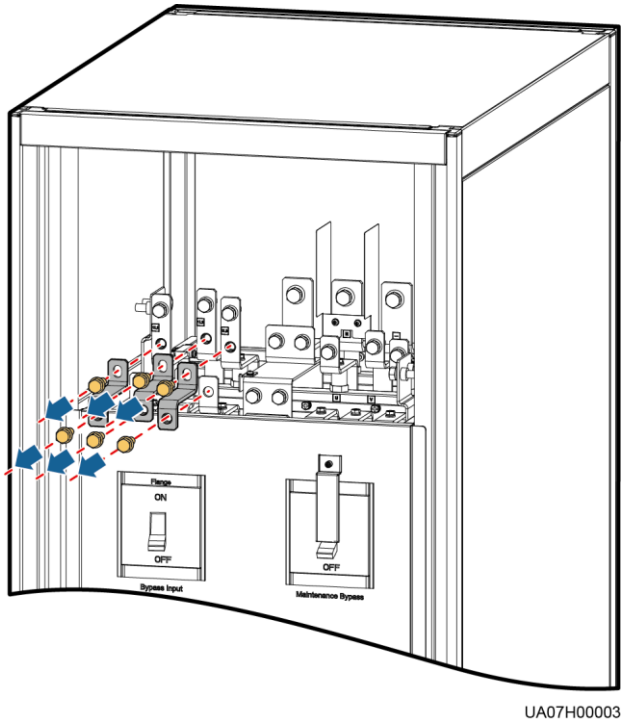

Figure 3-50 shows the cables routed from the top of the cabinet.

Figure 3-50 Top cabling

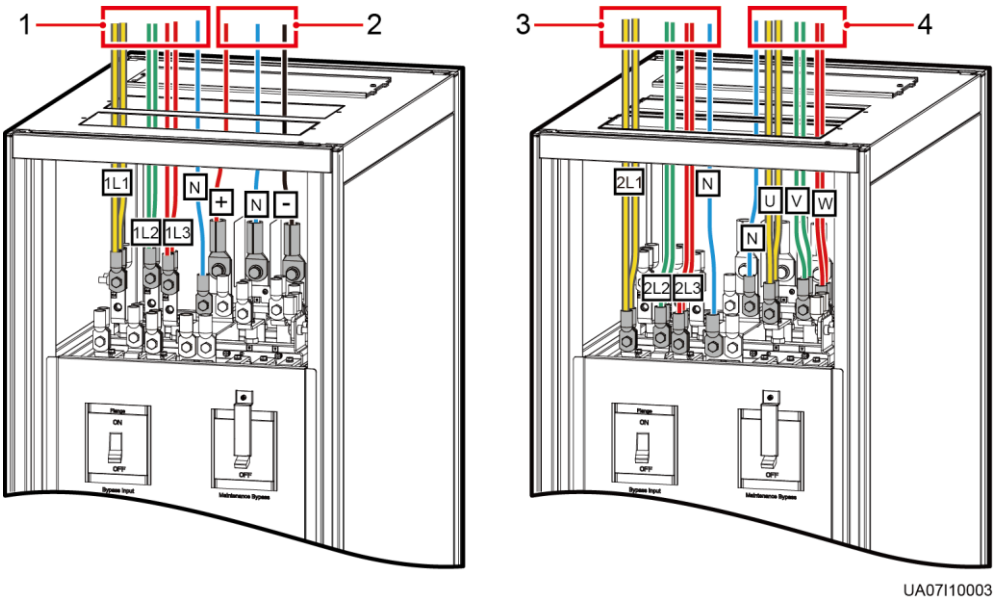

(1) Mains input terminals (1L1–1L3, N)

(2) Battery input terminals (+, N, –)

(3) Bypass input terminals (2L1–2L3, N)

(4) Output terminals (U, V, W, N)

Copyright © Huawei Technologies Co., Ltd.

NOTE

For details about how to connect the battery neutral wire, see Figure 3-36 in 3.2.5.1 Routing Cables from the Top.

- Single mains

  For single mains, the copper bars between the mains and bypass input terminals do not need to be removed, and bypass input cables do not need to be connected.

Step 5 Route the signal cables on the left sideof subracks along the left side of the cabinet and the cables on the right side of subracks along the right side of the cabinet, and then bind the cables to the cabinet, as shown in Figure 3-51.

Figure 3-51 Connecting signal cables

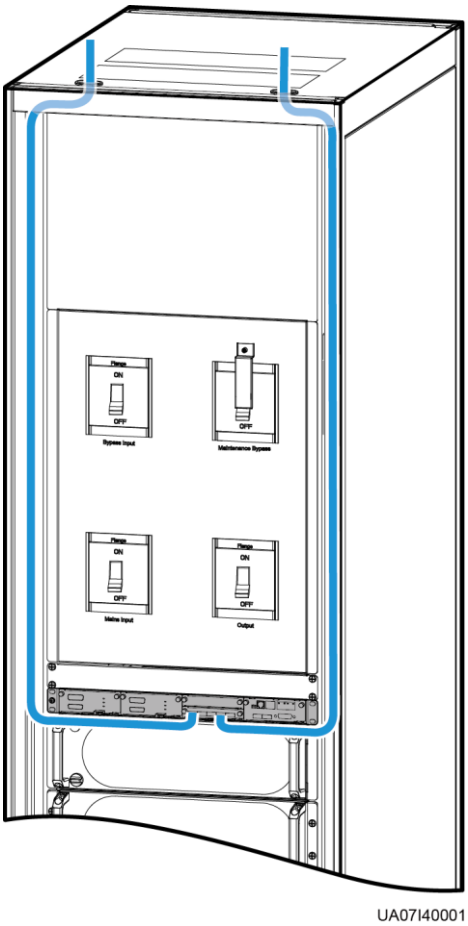

NOTE

The number and colors of signal cables in Figure 3-51 are for reference only.

----End

3.2.6.2 Routing Cables from the Bottom

Prerequisites

A cable entry cabinet is installed.

Copyright © Huawei Technologies Co., Ltd.

Context

NOTICE

- Route cables for the UPS from inside out and from bottom up.
- A cable entry cabinet can be placed only on the right of the UPS cabinet.
- In the scenarios where holes are drilled or covers are removed for routing cables, use firestop putty to fill in the gap between the cables and the cabinet after routing cables and checking cable connections.

Procedure

Step 1 (Optional) Determine the installation position for the cable entry cabinet, and draw mounting holes in the installation position based on drawings.

Figure 3-52 Mounting holes for the cable entry cabinet

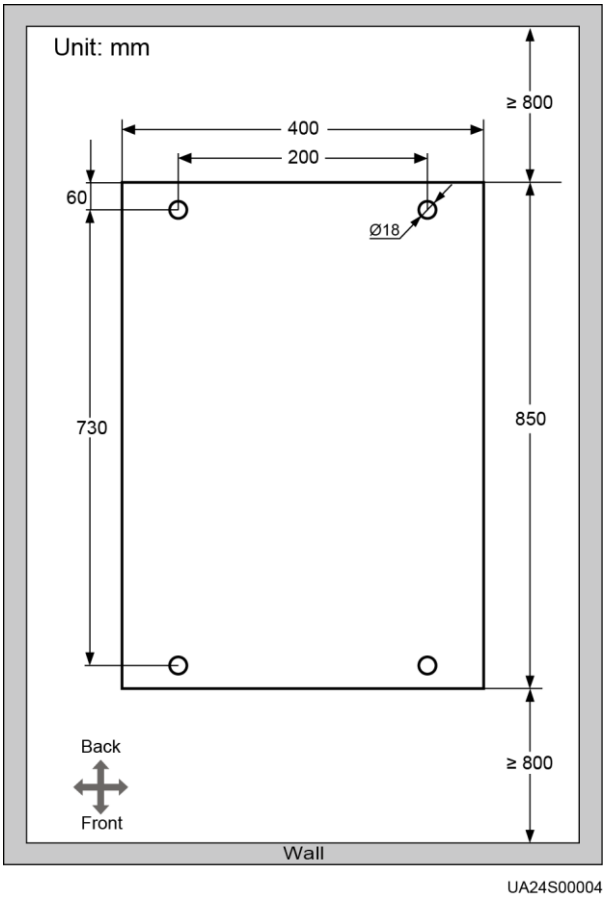

Step 2 Remove the right and rear covers from the UPS cabinet, and remove the front and rear covers from the cable entry cabinet. Put away the removed screws and covers.

Step 3 Adjust the anchor bolts of the cable entry cabinet to make it flush with the UPS cabinet.

Copyright © Huawei Technologies Co., Ltd.

Step 4 Install equipotential plate mounting kits on the same horizontal plane of the UPS cabinet and cable entry cabinet. The recommended installation positions are shown in the following figure.

Figure 3-53 Equipotential plate mounting kit

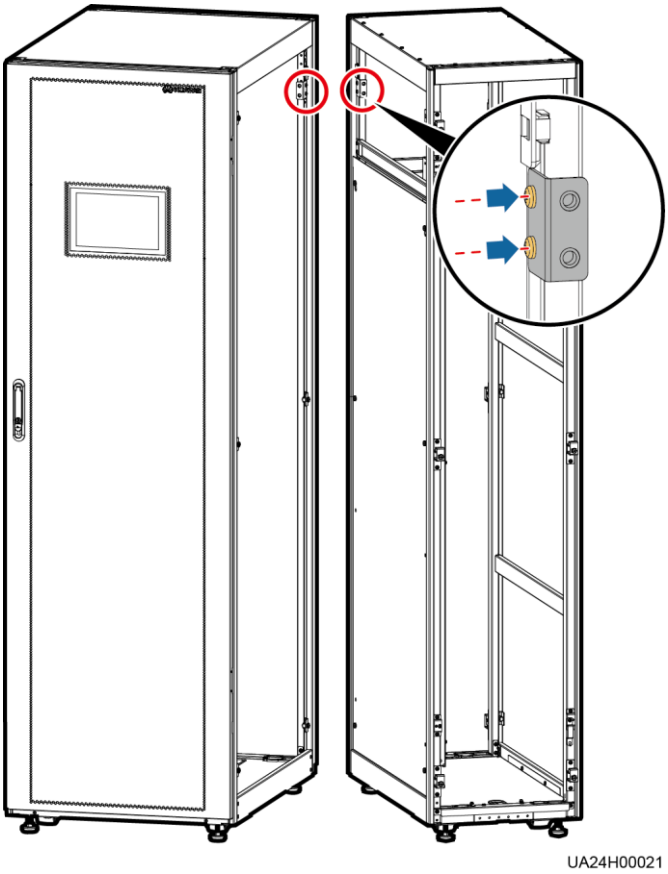

Step 5 Place the cable entry cabinet on the right of the UPS cabinet.

Step 6 Install the front and rear connecting kits.

Copyright © Huawei Technologies Co., Ltd.

Figure 3-54 Connecting kit

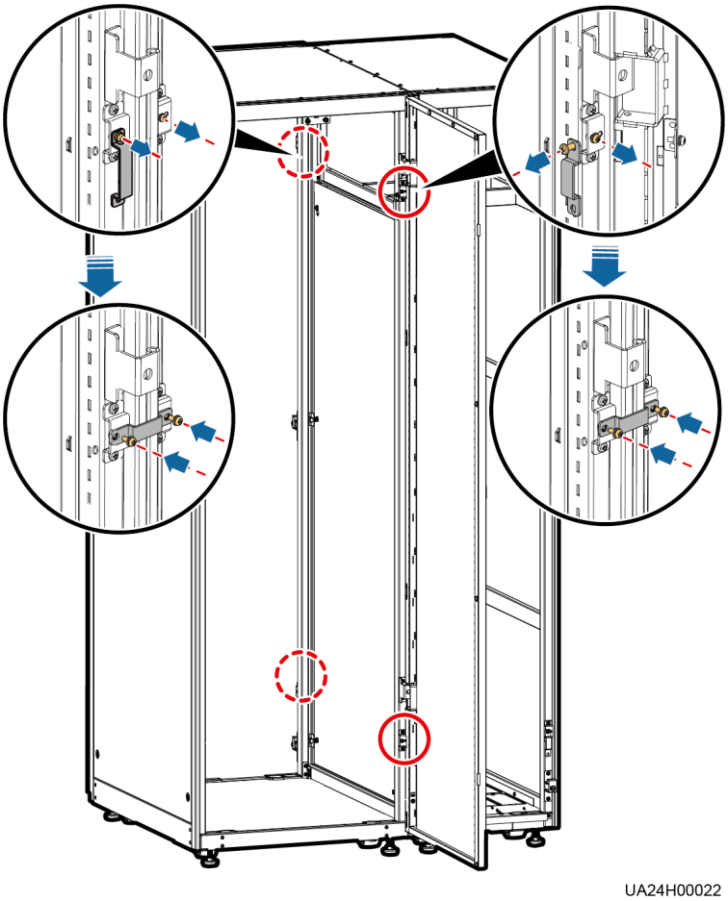

Step 7 (Optional) Secure the cable entry cabinet to the ground.

NOTE

For details about how to secure the cable entry cabinet, see Secured Installation in 3.2.1 Installing the Cabinet.

Step 8 Install an equipotential plate.

Copyright © Huawei Technologies Co., Ltd.

Figure 3-55 Equipotential plate

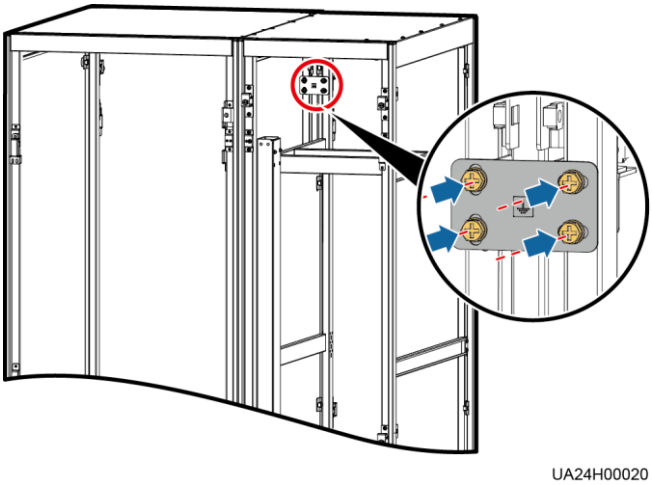

Step 9 Determine the cabling mode.

- Remove small covers for routing cables

  Remove a certain number of small covers from the bottom of the cable entry cabinet based on the actual cable conditions.

  Figure 3-56 Removing small covers

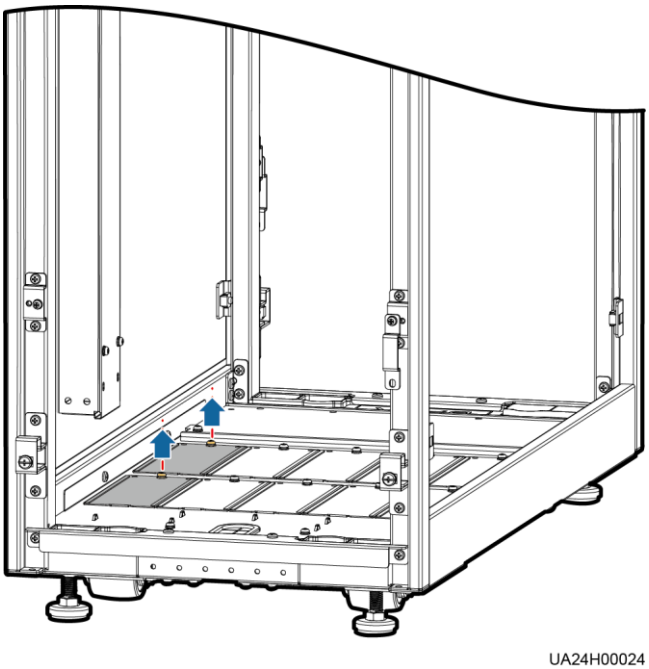

- Drill holes on the large cover for routing cables
  a. Remove all small covers from the bottom of the cable entry cabinet.
  b. Remove the two large covers from the bottom of the cable entry cabinet, drill holes into them based on site requirements, and install them on the positions where the small covers were placed.

Copyright © Huawei Technologies Co., Ltd.

Figure 3-57 Removing large covers

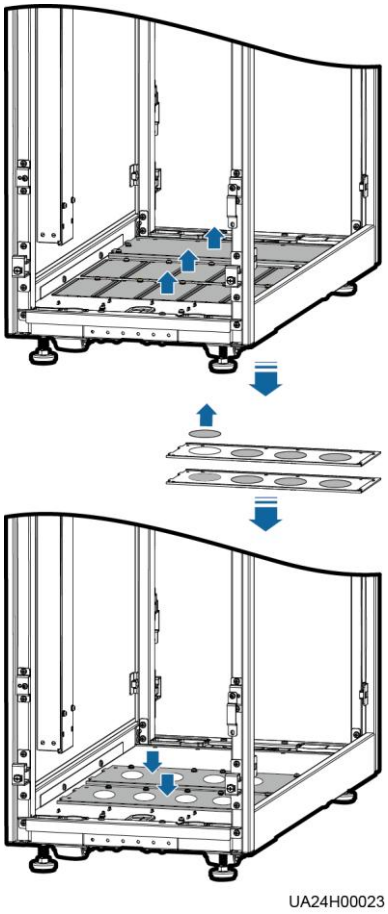

NOTE

- The quantity of holes in the above figure is for reference only.
- If holes are drilled for routing cables, attach grommet strips on the hole edges to protect cables.

Step 10 Connect the ground cables.

Copyright © Huawei Technologies Co., Ltd.

Figure 3-58 Connecting the ground cables

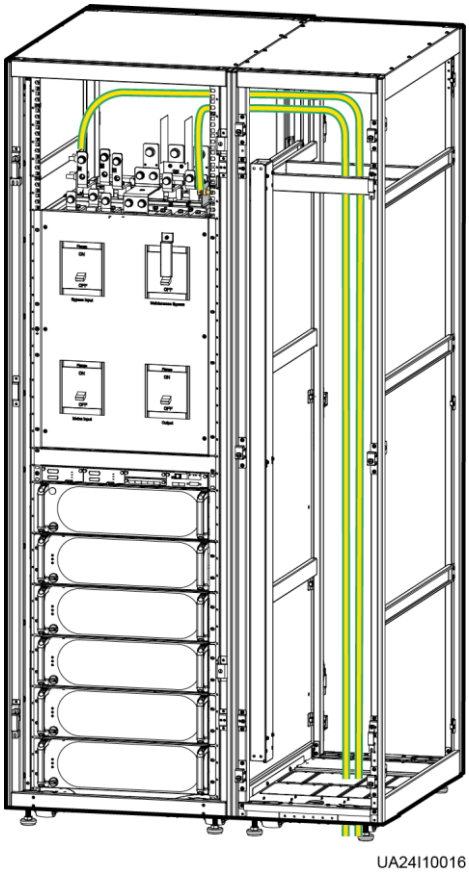

Step 11 Connect power cables.

Copyright © Huawei Technologies Co., Ltd.

Figure 3-59 Connecting power cables

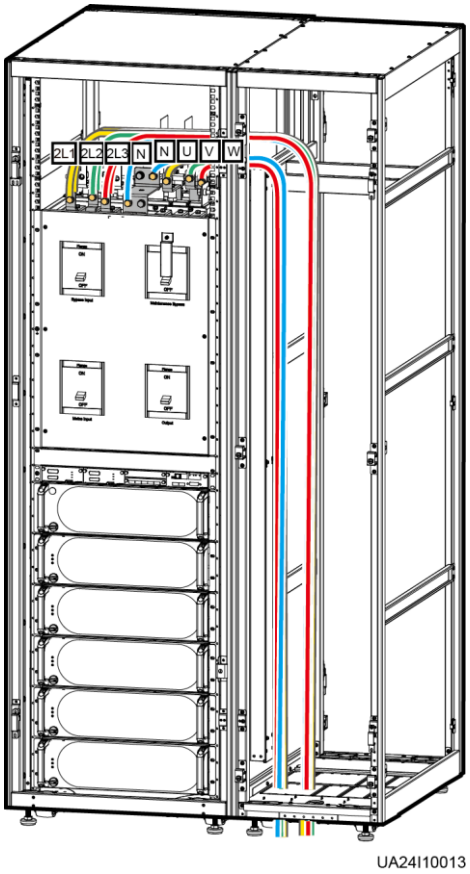

Copyright © Huawei Technologies Co., Ltd.

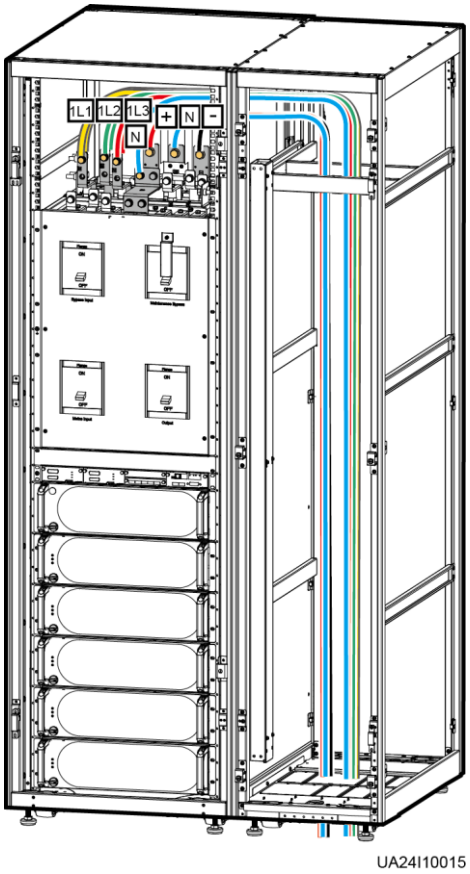

Step 12 Remove the signal cable trough cover from the cable entry cabinet.

Copyright © Huawei Technologies Co., Ltd.

Figure 3-60 Removing the cable trough cover

Step 13 Connect the signal cable.

Copyright © Huawei Technologies Co., Ltd.

Figure 3-61 Signal cable

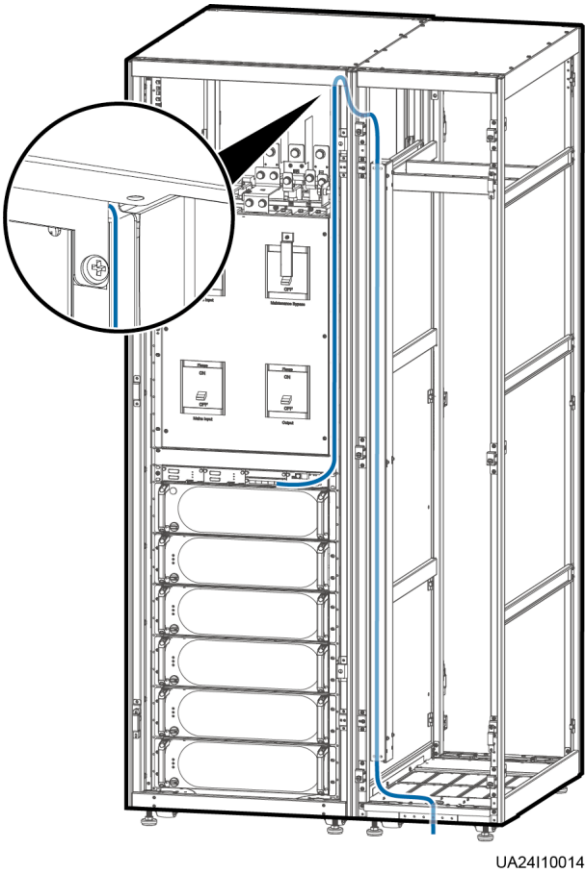

Step 14 Install the right cover of the UPS cabinet on the right of the cable entry cabinet, and install other covers in the original positions.

----End

3.2.7 Routing Cables (UPS5000-E-300K-SM)

Context

NOTICE

- Route cables for the UPS from inside out and from bottom up.
- After routing cables, use firestop putty to fill in the gap between the cables and the cabinet.

Procedure

Step 1 Open the front door, and remove the cover from the power distribution subrack, as shown in Figure 3-62. Figure 3-63 shows the positions of copper bars.

Copyright © Huawei Technologies Co., Ltd.

Figure 3-62 Removing the cover

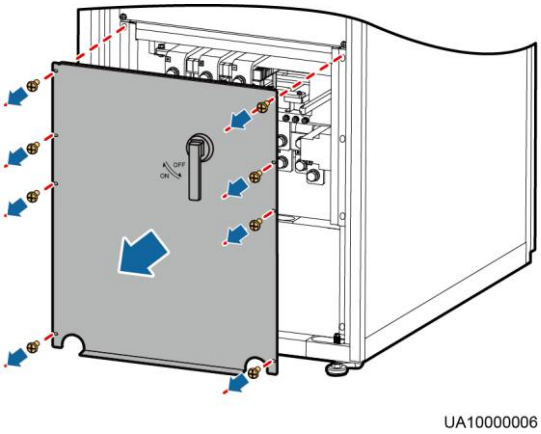

Figure 3-63 Copper bar positions

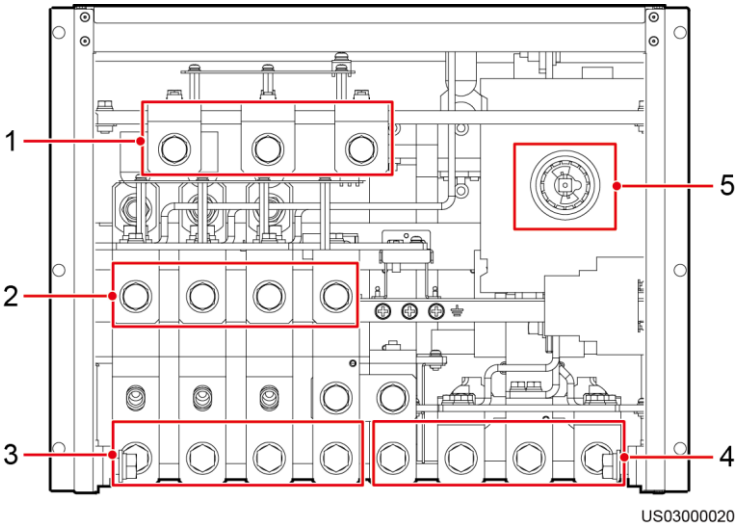

(1) Battery input terminals (+, N, –)	(2) Bypass input terminals (2L1–2L3, N)	(3) Mains input terminals (1L1–1L3, N)
(4) Output terminals (U, V, W, and N)	(5) Maintenance bypass switch	

Step 2 Determine the cabling mode.

- Remove small covers for routing cables.

  Take out the cable cover for signal cables, and remove small covers from the bottom based on site requirements, as shown in Figure 3-64.

Copyright © Huawei Technologies Co., Ltd.

Figure 3-64 Removing small covers from the bottom of the cabinet

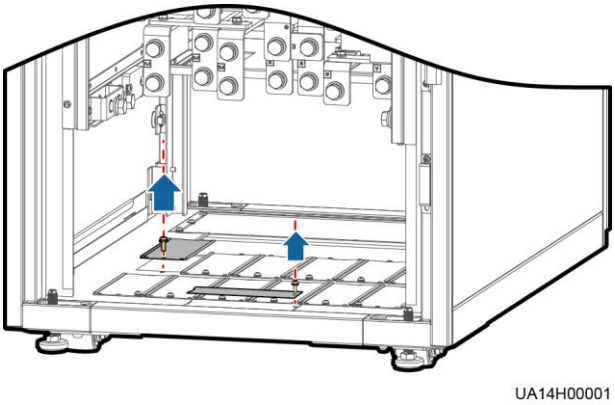

- Drill holes into the large cover for routing cables.
  a. Remove all small covers from the bottom of the cabinet.
  b. Remove the two large covers from the rear bottom of the cabinet, drill holes into them, and install them to the positions where the small covers were placed, as shown in Figure 3-65.

Copyright © Huawei Technologies Co., Ltd.

Figure 3-65 Hole positions

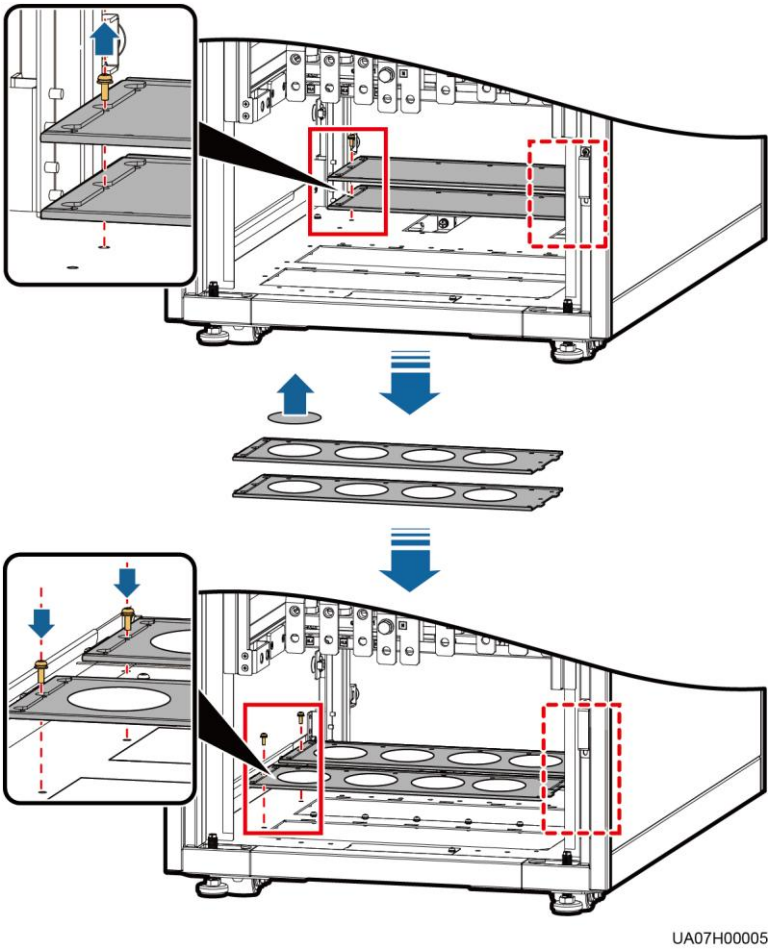

NOTE

- The quantity of holes in the above figure is for reference only.
- If holes are drilled for routing cables, attach grommet strips to the hole edges to protect cables.

c. Re-install the removed two small covers on the holes at the rear bottom of the cabinet, as shown in Figure 3-66.

Figure 3-66 Installing small covers

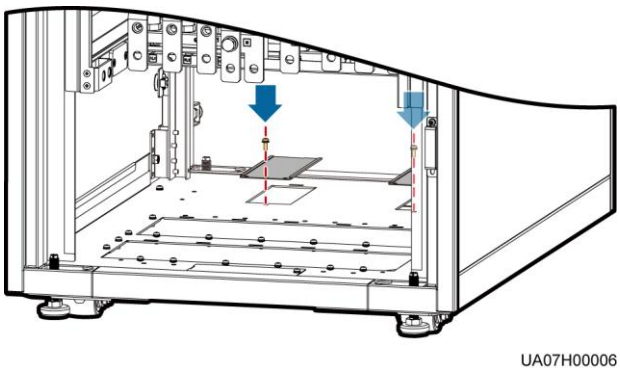

Copyright © Huawei Technologies Co., Ltd.

Step 3 Connect ground cables, as shown in Figure 3-67.

Figure 3-67 Grounding

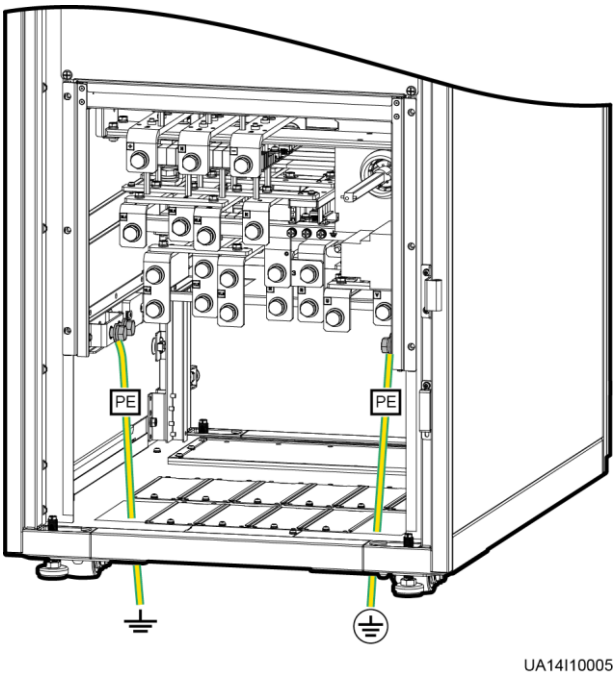

NOTE

In the figure, the wiring terminal with a circle is the primary wiring terminal that connects to the ground cable.

Step 4 Route power cables.

- Dual mains

  Remove the copper bars between the mains and bypass input terminals, as shown in Figure 3-68.

Copyright © Huawei Technologies Co., Ltd.

Figure 3-68 Removing copper bars

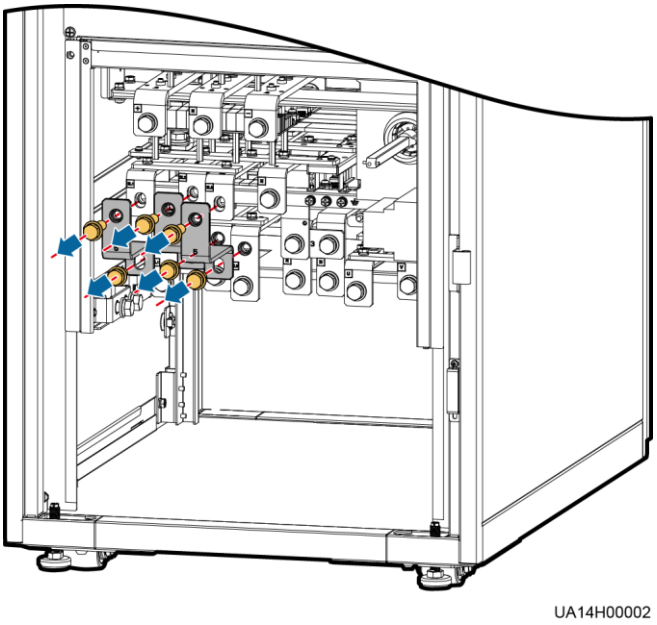

Figure 3-69 shows the power cables routed from the bottom of the cabinet.

Copyright © Huawei Technologies Co., Ltd.

Figure 3-69 Connecting power cables

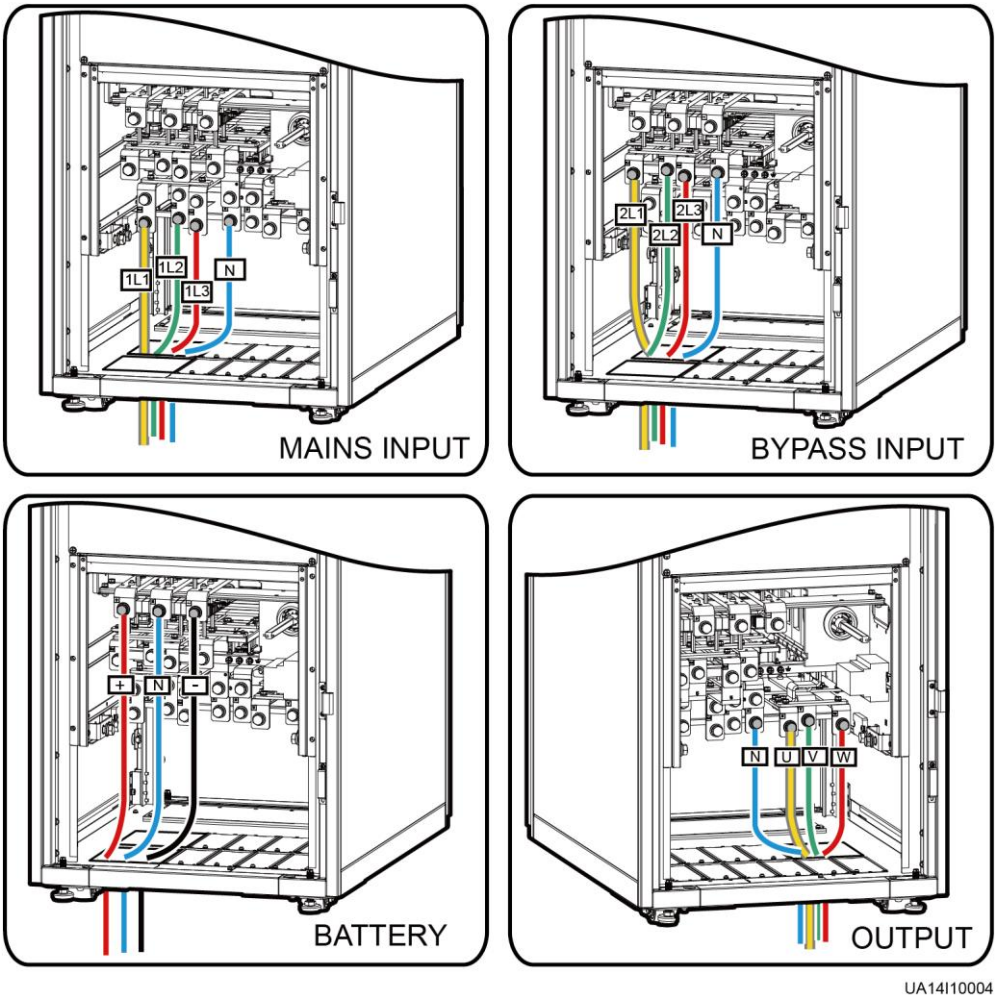

NOTE

For details about how to connect the battery neutral wire, see Figure 3-36 in 3.2.5.1 Routing Cables from the Top.

- Single mains

  For single mains, the copper bars between the mains and bypass input terminals do not need to be removed, and bypass input cables do not need to be connected.

Step 5 Route the signal cables on the left sideof subracks along the left side of the cabinet and the cables on the right side of subracks along the right side of the cabinet, and then bind the cables to the cabinet, as shown in Figure 3-70.

Copyright © Huawei Technologies Co., Ltd.

Figure 3-70 Connecting signal cables

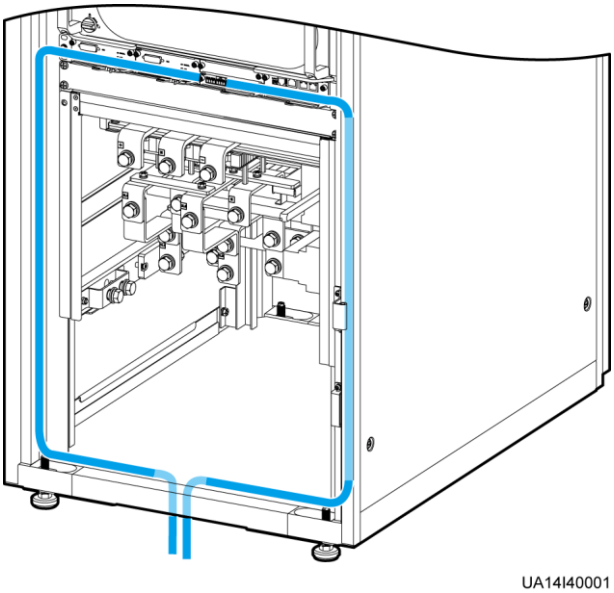

NOTE

The number and colors of signal cables in Figure 3-70 are for reference only.

----End

3.2.8 Routing Cables (UPS5000-E-300K-SMT)

Context

NOTICE

- The basic rule for routing cables is: from inside out and from bottom up.
- After routing cables, use firestop putty to fill in the gap between the cables and the cabinet.

Procedure

Step 1 Ensure the maintenance bypass switch is OFF. Open the front door and remove the cover from the power distribution subrack, as shown in Figure 3-71.

Copyright © Huawei Technologies Co., Ltd.

Figure 3-71 Removing the cover

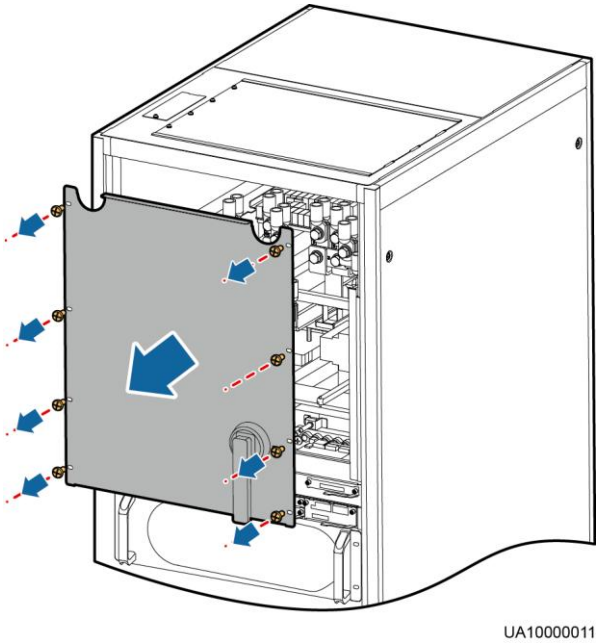

Figure 3-72 Copper bar positions

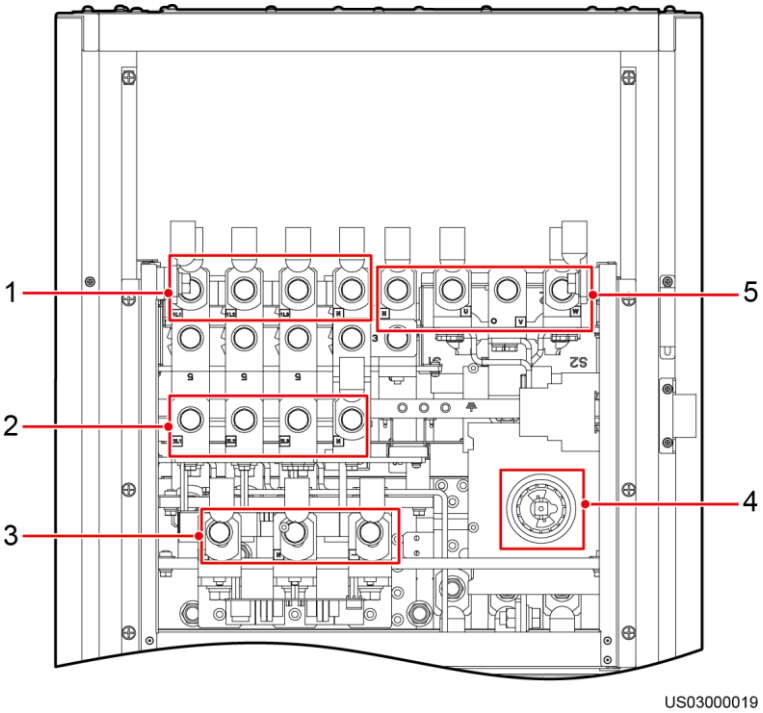

(1) Mains input terminals (1L1–1L3, N)

(2) Bypass input terminals (2L1–2L3, N)

(3) Battery input terminals (+, N, –)

(4) Maintenance bypass switch

(5) Output terminals (U, V, W, N)

Copyright © Huawei Technologies Co., Ltd.

Step 2 Remove the cable covers for the power cables and signal cables from the cabinet, drill holes into the cable cover, attach grommet strips to the hole edges for cable protection, and reinstall the cable cover for the power cables, as shown in Figure 3-73.

Figure 3-73 Removing the cable cover from the top of the cabinet

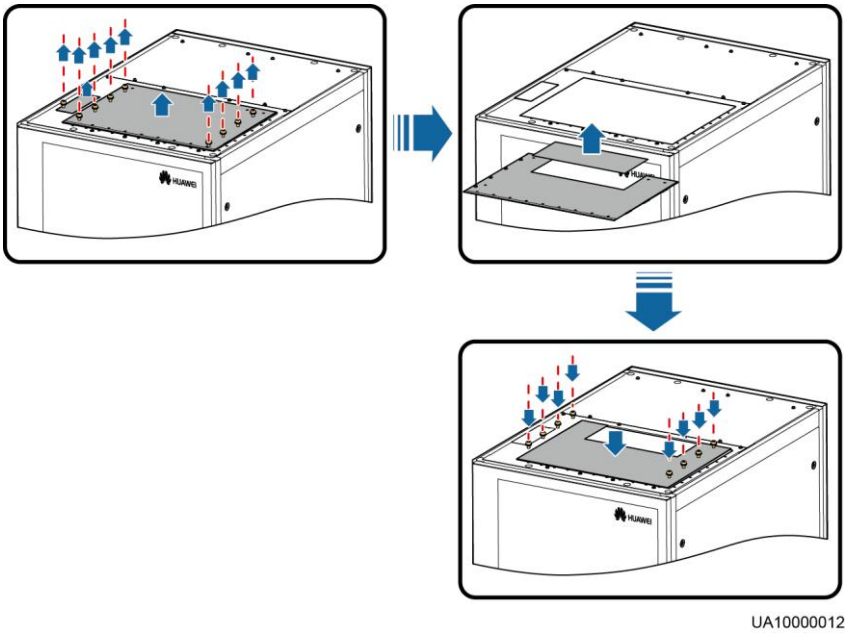

NOTE

The quantity of holes in the above figure is for reference only.

Step 3 Connect ground cables, as shown in Figure 3-74.

Copyright © Huawei Technologies Co., Ltd.

Figure 3-74 Grounding

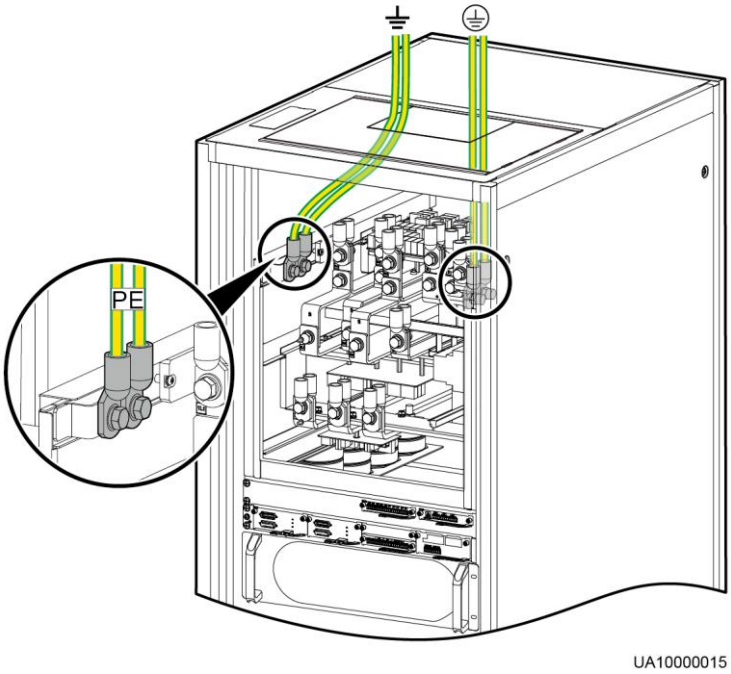

NOTE

In the figure, the wiring terminal with a circle is the primary wiring terminal that connects to the ground cable.

Step 4 Route power cables.

- Dual mains

  Remove the copper bar between mains and bypass input terminals, as shown in Figure 3-75.

Copyright © Huawei Technologies Co., Ltd.

Figure 3-75 Removing copper bars

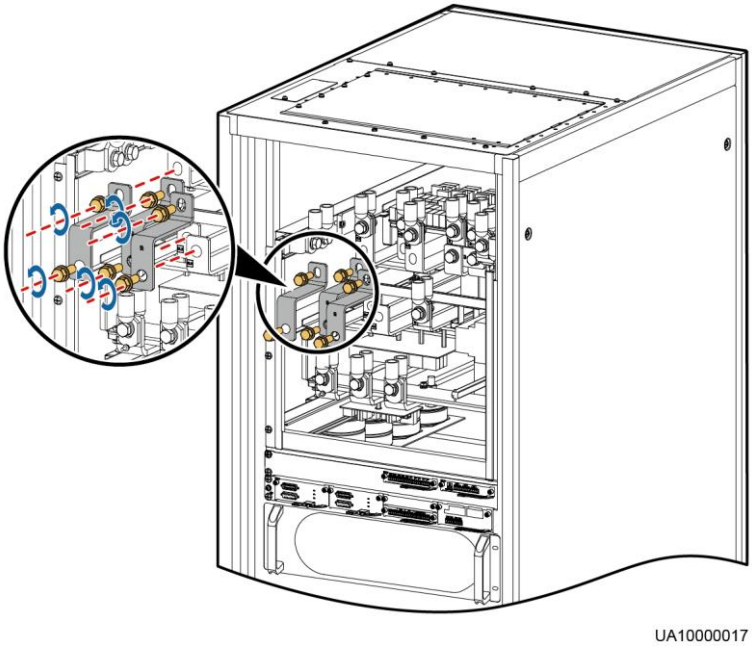

Figure 3-76 shows the cables routed from the top of the cabinet.

Copyright © Huawei Technologies Co., Ltd.

Figure 3-76 Top cabling

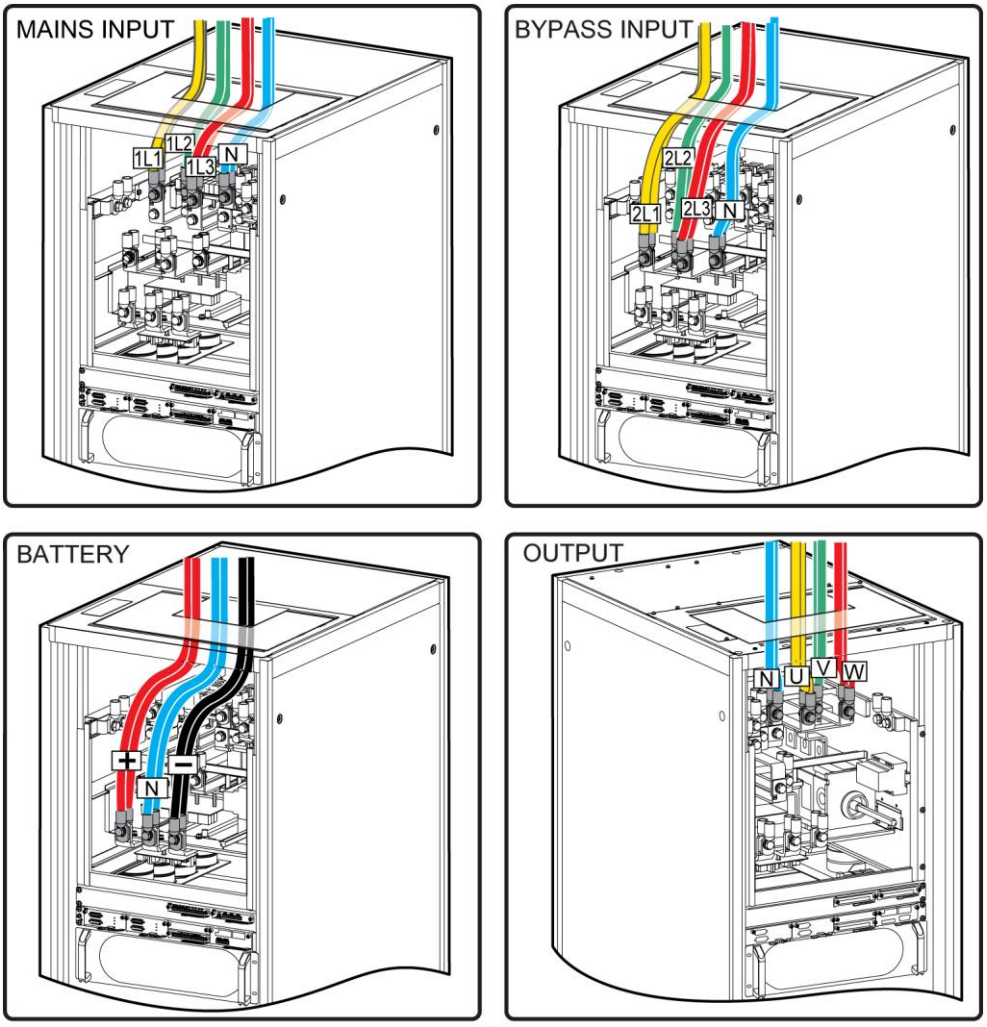

NOTE

For details about how to connect the battery neutral wire, see Figure 3-36 in 3.2.5.1 Routing Cables from the Top.

- Single mains

  For single mains, the copper bar between the mains and bypass input terminals do not need to be removed, and bypass input cables do not need to be connected.

Step 5 Route signal cables. Bind cables to the cabinet. Figure 3-77 shows the signal cables routed from the top of the cabinet.

Copyright © Huawei Technologies Co., Ltd.

Figure 3-77 Connecting signal cables

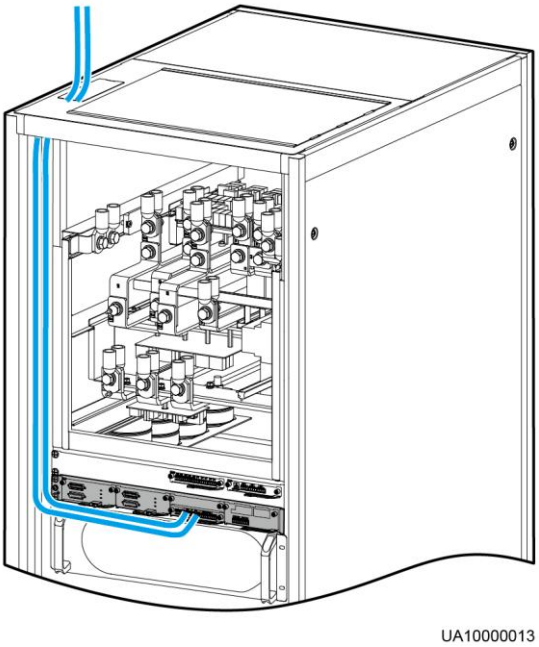

NOTE

The number and colors of signal cables in Figure 3-77 are for reference only.

----End

3.2.9 Remote EPO

NOTICE

- Huawei does not provide the EPO switch or cable. If the cable is required, the recommended cable is 22 AWG.
- Equip the EPO switch with a protective cover to prevent misoperations, and cover the cable with protective tubing.
- Triggering EPO will shut down the rectifier, inverter, charger, and static bypass, but does not disconnect the UPS mains input. To power off the UPS completely, open the front-end input switch when triggering EPO.

Connect the requisite EPO switch to UPS dry contacts.

- Figure 3-78 shows the cable connections for an NC EPO switch.
- Figure 3-79 shows the cable connections for an NO EPO switch.

Copyright © Huawei Technologies Co., Ltd.

Figure 3-78 Cable connection for an NC EPO switch

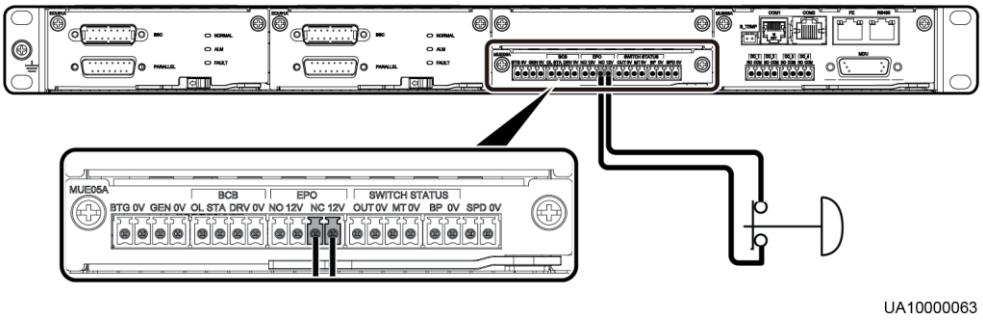

Figure 3-79 Cable connection for an NO EPO switch

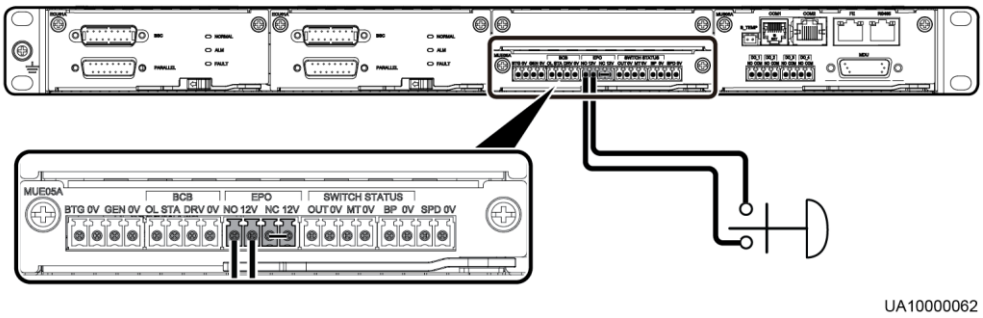

NOTE

- When the EPO switch is in the NC state, remove the jumper between EPO_NC and EPO_12V before connection. When the EPO switch is turned off, EPO is triggered.
- When the EPO switch is in the NO state, ensure that the jumper is connected between EPO_NC and EPO_12V. When the EPO switch is turned on, EPO is triggered.

3.2.10 Connecting Communications Cables

Procedure

Step 1 Connect the external network management device to the RS485 port.

Step 2 Connect the network port on a PC to the FE port.

----End

3.3 Installing a Parallel System

3.3.1 Installing the UPSs

Context

Copyright © Huawei Technologies Co., Ltd.

NOTICE

When installing multiple cabinets, install connecting kits to combine and secure the cabinets.

Procedure

Step 1 Install the UPSs in a parallel system using the single UPS installation methods. For details, see 3.2 Installing a Single UPS.

Step 2 Unscrew the connecting kits at the front and rear of the cabinet, align them with the reserved holes that can connect the two UPSs and then use screws to tighten the connecting kits to the cabinet according to the following figures:

- Figure 3-80 shows the connection point for the UPS5000-E-200K-SM and UPS5000-E-300K-SM/SMT.
- Figure 3-81 shows the connection point for the UPS5000-E-200K-FM.

Figure 3-80 Installing connecting kits (UPS5000-E-200K-SM and UPS5000-E-300K-SM/SMT)

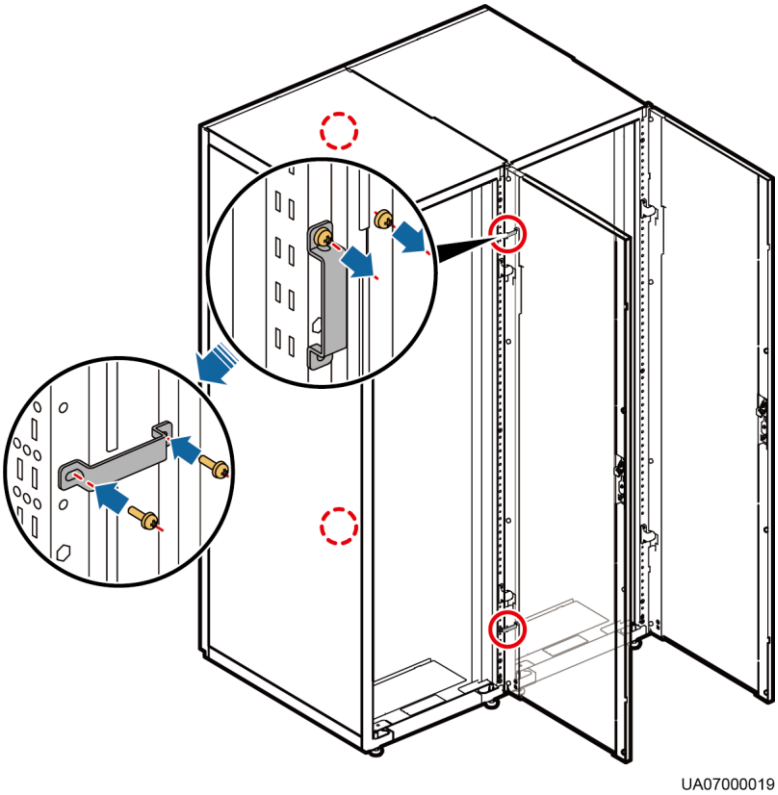

Copyright © Huawei Technologies Co., Ltd.

Figure 3-81 Installing connecting kits (UPS5000-E-200K-FM)

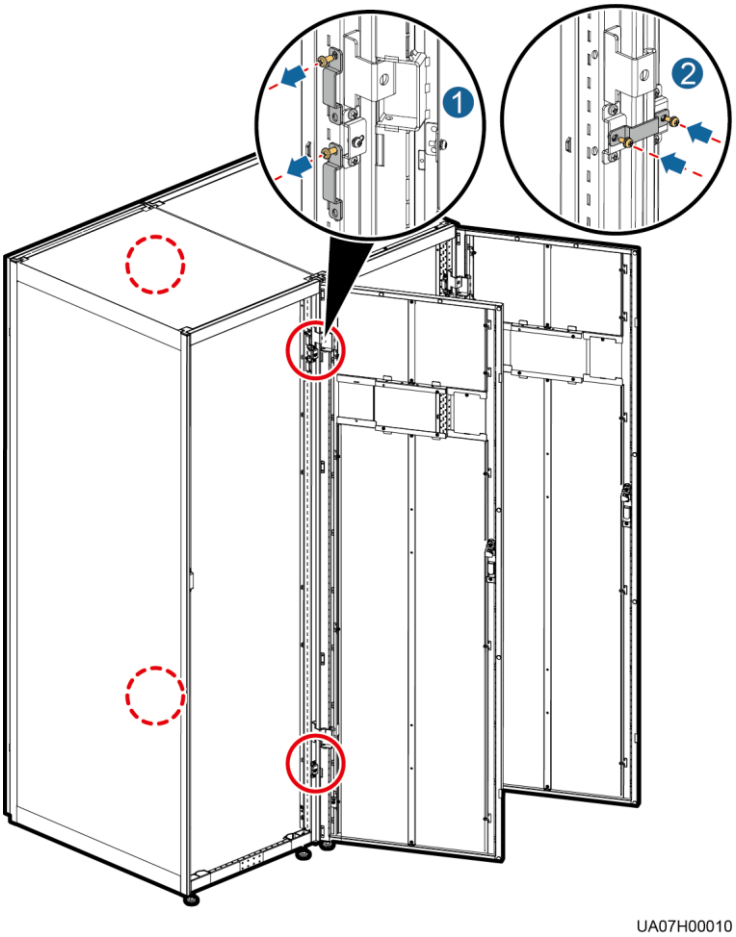

----End

3.3.2 Connecting Power Cables

Context

Cable connection for the UPS5000-E-200K-SM is used as an example. The parallel power cables for different UPS models can be connected in a similar way.

Procedure

Step 1 Ground each UPS in a parallel system separately, and connect power cables and battery cables according 3.2 Installing a Single UPS.

Step 2 Based on the site configurations, select a parallel connection method to connect cables for the parallel system.

Figure 3-82 shows a typical conceptual diagram for a 1+1 parallel system, and Figure 3-83 shows the cable connections for this system.

Copyright © Huawei Technologies Co., Ltd.

NOTE

This document uses the number of oblique lines to indicate the number of power cables of the same type.

Figure 3-82 Conceptual diagram of a 1+1 parallel system

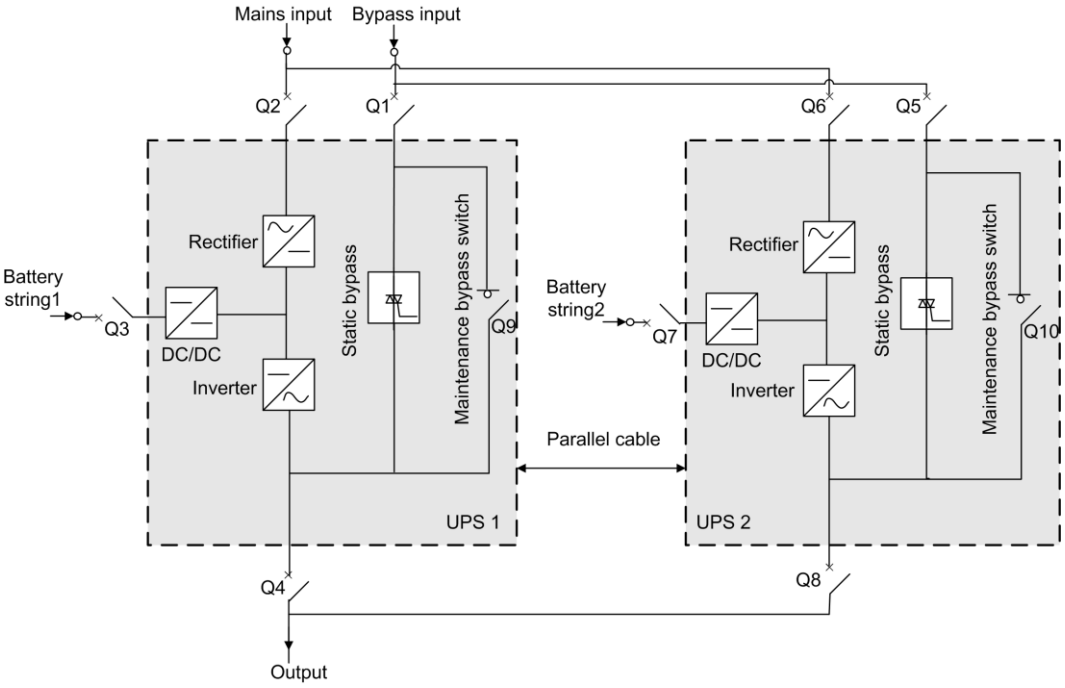

NOTICE

Connect power cables according to port silk screen.

Copyright © Huawei Technologies Co., Ltd.

Figure 3-83 Cable connections for a 1+1 parallel system

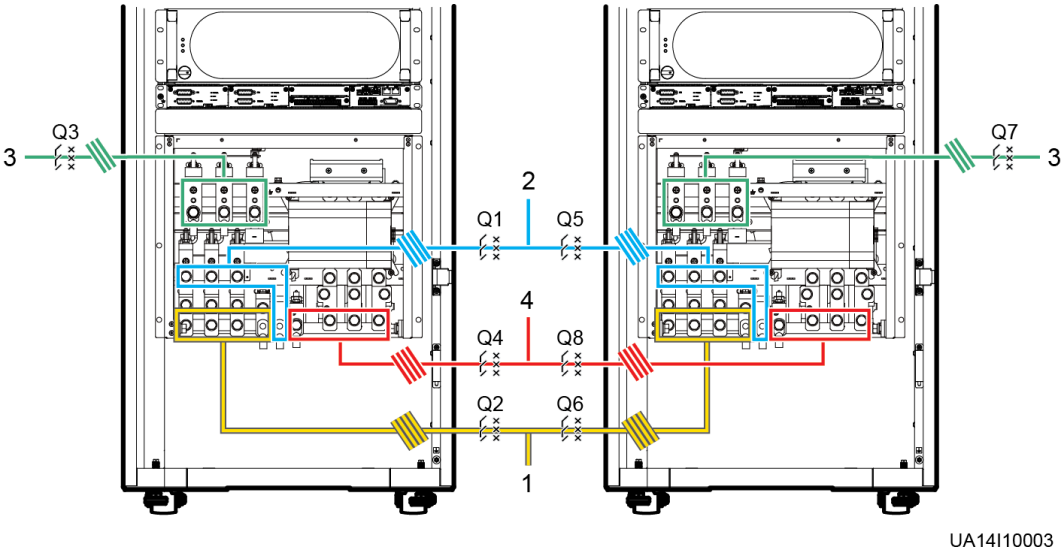

(1) Mains input power cables	(2) Bypass input power cables	(3) Battery cables	(4) Output power cables

Figure 3-84 shows a typical conceptual diagram for a dual-bus system consisting of two UPS systems, and Figure 3-85 show the cable connections for this system.

Figure 3-84 Conceptual diagram of a dual-bus system

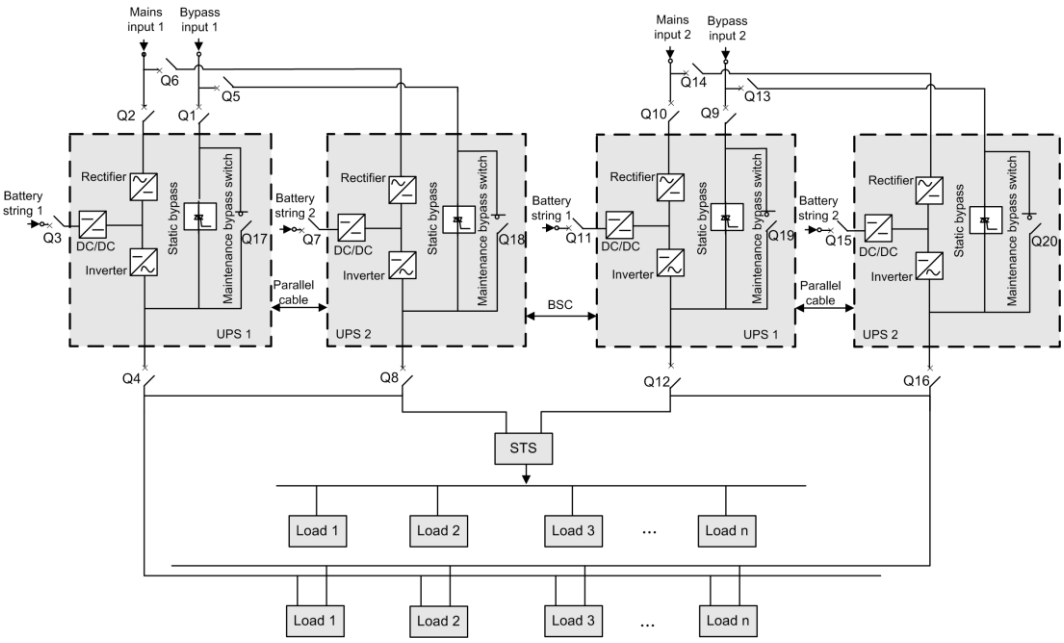

Copyright © Huawei Technologies Co., Ltd.

Figure 3-85 Cable connections for a dual-bus system

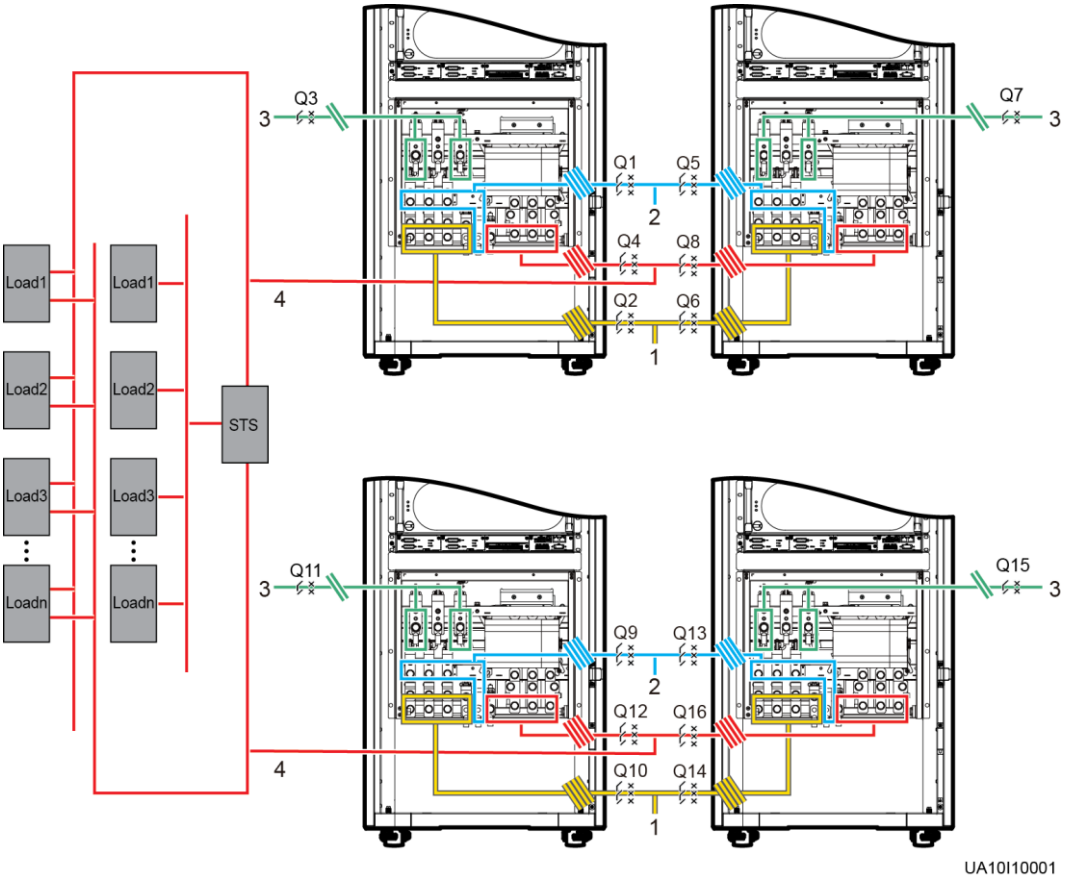

(1) Mains input power cables	(2) Bypass input power cables	(3) Battery cables	(4) Output power cables

----End

3.3.3 Connecting Signal Cables

Context

A maximum of four UPS5000-E-200K-SM/FMs and UPS5000-E-300K-SM/SMTs can be connected in parallel. Cable connection principles for two UPSs connected in parallel are the same as those for four UPSs connected in parallel. The following describes how to connect cables for four UPSs connected in parallel.

Procedure

Step 1 Connect the parallel ports on the UPSs using parallel cables.

- Figure 3-86 shows the topology diagram for the N+X parallel system and Figure 3-87 shows the cable connections for this system.

Copyright © Huawei Technologies Co., Ltd.

Figure 3-86 Topology diagram of an N+X parallel system

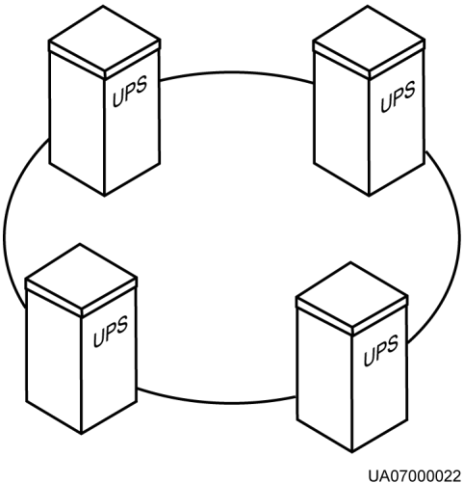

NOTICE

Figure 3-87 shows only control modules. Each control module represents a single UPS.

Figure 3-87 Connecting signal cables in a parallel system consisting of four UPSs

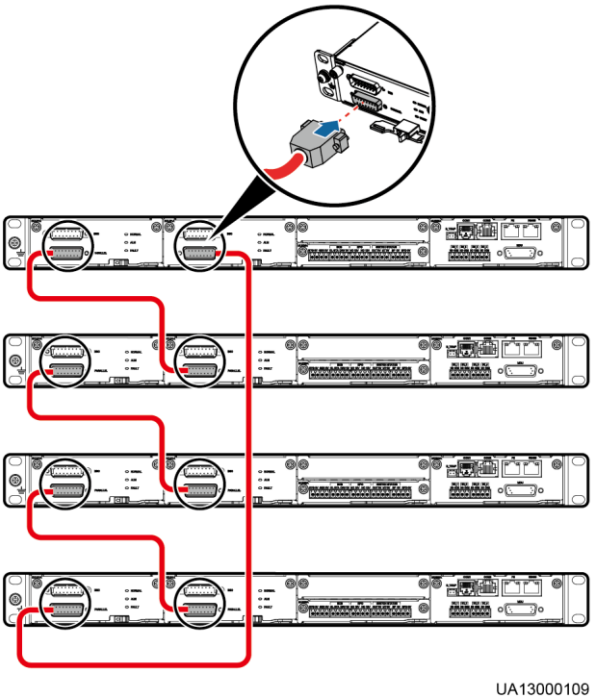

- In a dual-bus system, you need to connect cables to BSC ports on the UPSs. Figure 3-88 shows the cable connections for a dual-bus system containing two master systems.

Copyright © Huawei Technologies Co., Ltd.

Figure 3-88 Connecting signal cables in a dual-bus system

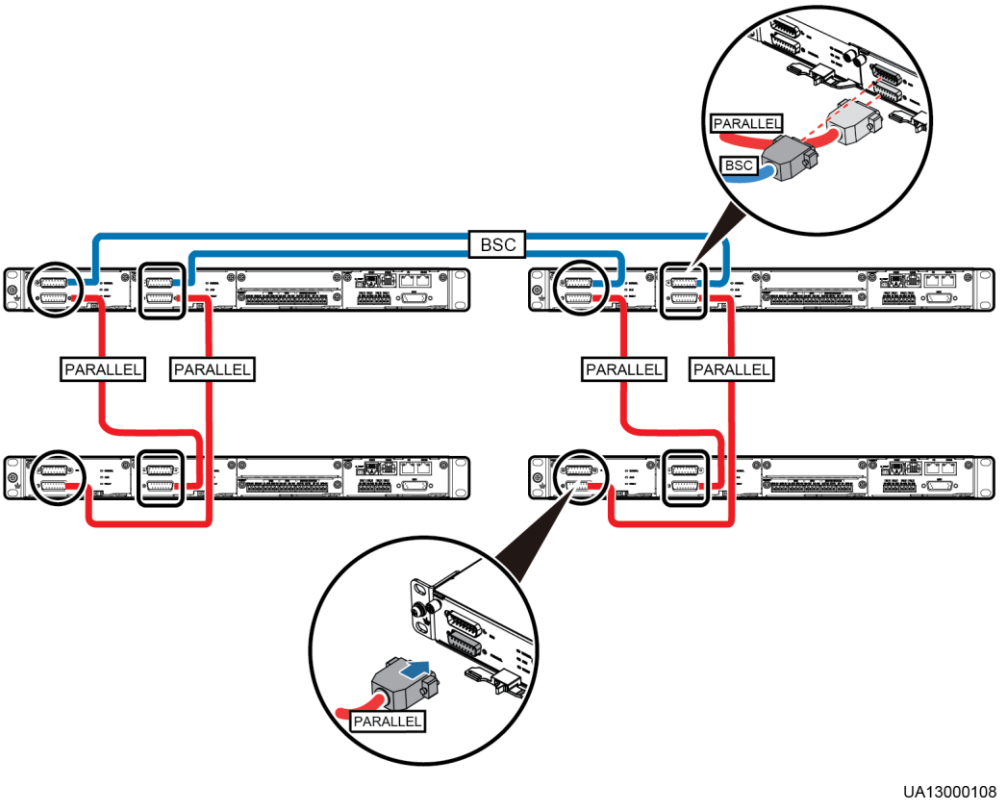

Step 2 Connect signal cables for each UPS by referring to 2.3.4 Control Module.

----End

3.4 Installation Verification

Table 3-9 lists check items.

NOTICE

If the check results of listed items 10 and 11 in Table 3-9 do not meet the acceptance criteria, the UPS may be damaged.

Table 3-9 Installation checklist

No.	Item	Acceptance Criteria
01	Consistency between system configurations and delivery configurations	The system configurations, including models and the number of modules, comply with the contract.

Copyright © Huawei Technologies Co., Ltd.

No.	Item	Acceptance Criteria
02	Cable layout	Cables are routed properly and meet engineering requirements.
03	Secure cable connections	Input and output power cables and battery cables are securely connected, and spring washers have been flattened to prevent them from falling off and causing accidents. There is no risk of disconnection.
04	Marks for tightened screws	Tightened screws are marked.
05	Serial port connection (security protection mechanism supported)	Signal cables are connected properly and securely.
06	Cable labels	Both ends of each cable are labeled. Labels are easy to understand.
07	Ground cable connections	The ground cable is securely connected to the equipment room ground bar. Use a multimeter to measure the resistance between the UPS ground cable and the equipment room ground bar. The resistancemust be less than 1 ohm.
08	Distances between cable ties	Distances between cable ties are the same (recommended distance is 30 cm), and no burr exists.
09	Correct cable connections	Cables are properly connected according to wiring diagrams.
10	Live wire and neutral wire connections	Input and output live wires and neutral wires are correctly connected. Mains input terminals 1L1, 1L2, 1L3, and N, bypass input terminals 2L1, 2L2, 2L3, and N, and output terminals U, V, W, and N are properly connected.
11	Input and output live wire phase sequences	In single UPS mode, mains and bypass input and output live wires are connected in a correct sequence. In a parallel system, mains and bypass input and output live wires are connected in the same sequence for each UPS.
12	Battery cable connections	Use a multimeter to check that the sum of the absolute voltage of the negative battery string and the voltage of the positive battery string is greater than a certain value (2 x Number of cells), and that the difference between the absolute voltage of the negative battery string and the voltage of the positive battery string is less than the voltage of a battery (2 V or 12 V).

Copyright © Huawei Technologies Co., Ltd.

No.	Item	Acceptance Criteria
13	Operating environment	The inside and outside of the cabinet, and other operating components, are free from conductive dust.
14	Copper busbar short circuit	Copper busbars are confirmed as being open-circuited using a multimeter, or an insulation resistance tester.

NOTE

1. In the scenarios where holes are drilled for routing cables or covers are removed for routing cables, after routing cables and checking cable connections, use firestop putty to fill in the gap between the cables and the cabinet.
2. After verifying the installation, reinstall all the covers.
3. Do not remove the dustproof cover before power-on to prevent dust inside the UPS.

Copyright © Huawei Technologies Co., Ltd.

4 User Interface

4.1 LCD Interface

4.1.1 LCD

The monitor display unit (MDU), located on the front door of the cabinet, allows for general UPS operations, parameter setting, viewing of running status and alarms, and so on. The MDU provides a status indicator and an LCD touchscreen, as shown in Figure 4-1.

Figure 4-1 MDU

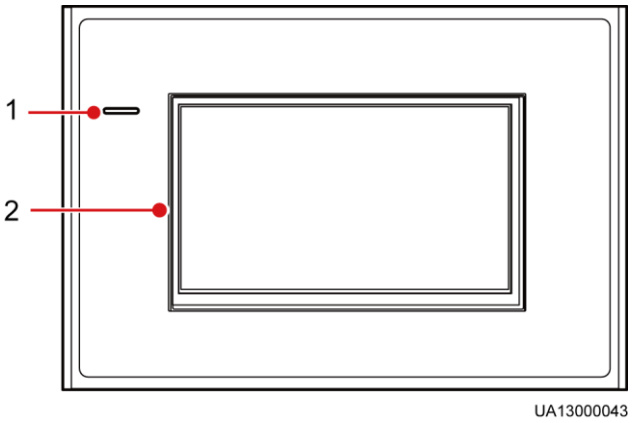

(1) Status indicator (2) LCD touchscreen

NOTE

Touch the LCD screen firmly because it is an industrial resistive touchscreen. It is recommended that you use your fingernails for accurate selection and quick response, as shown in Figure 4-2.

Copyright © Huawei Technologies Co., Ltd.

Figure 4-2 Touching the LCD

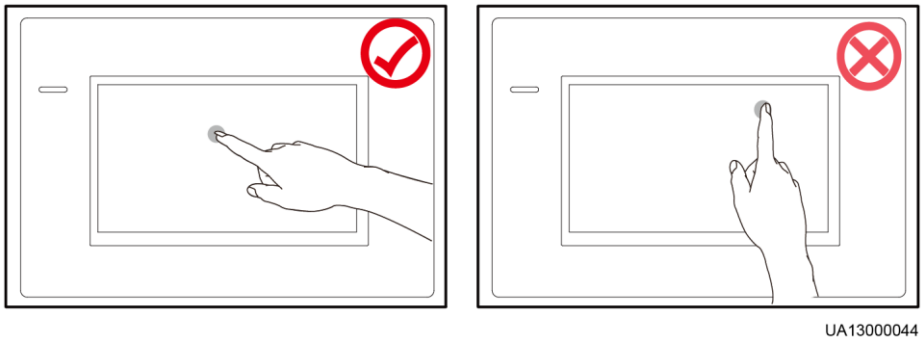

Table 4-1 describes the status indicator.

Table 4-1 Status indicator

Status	Color	Meaning
On	Red	A critical alarm has been generated, and the buzzer sounds continuously.
	Yellow	A minor alarm has been generated, and the buzzer buzzes at 2 Hz.
	Green	The UPS is running properly.
Off	N/A	The MDU is powered off.

NOTE

The indicator on the LCD panel is yellow when the bypass supplies power in non-ECO mode.

4.1.2 LCD Menu

4.1.2.1 Menu Hierarchy

Figure 4-3 shows the LCD menu hierarchy.

Copyright © Huawei Technologies Co., Ltd.

Figure 4-3 Menu hierarchy

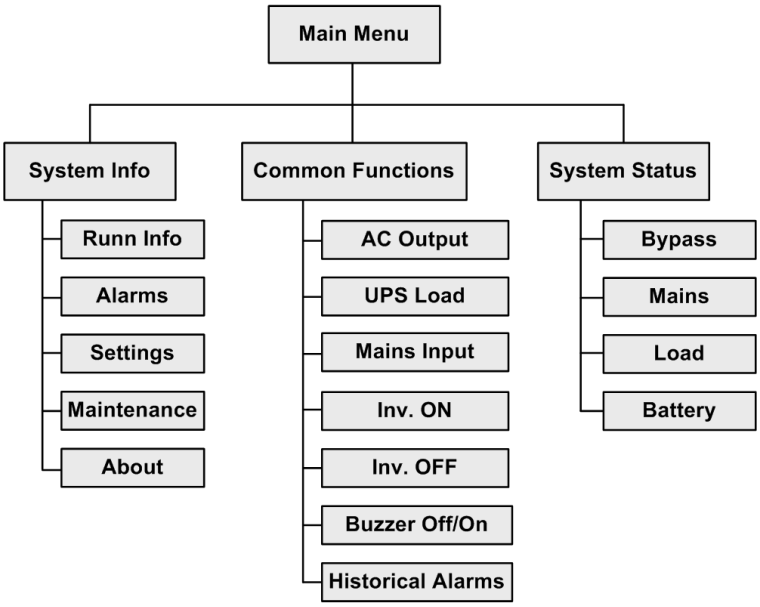

4.1.2.2 Initial Startup

NOTICE

User interfaces displayed in this document correspond to the monitor display module (MDU) version V100R003C01 and are for reference only.

The **Settings Wizard** screen is displayed when the UPS is started for the first time or when the UPS restarts after restoring factory settings. Parameters including **Language**, **Time**, **Network Param.**, and **System Param.** can be set on the **Settings Wizard** of the MDU, as shown in Figure 4-4.

Copyright © Huawei Technologies Co., Ltd.

Figure 4-4 Settings Wizard

4.1.2.3 Main Menu

The LCD screen is divided into three parts: status bar, alarm bar and information area. Figure 4-5 numerically labels functions of the default main screen, and Table 4-2 describes these functions.

Figure 4-5 Main Menu screen

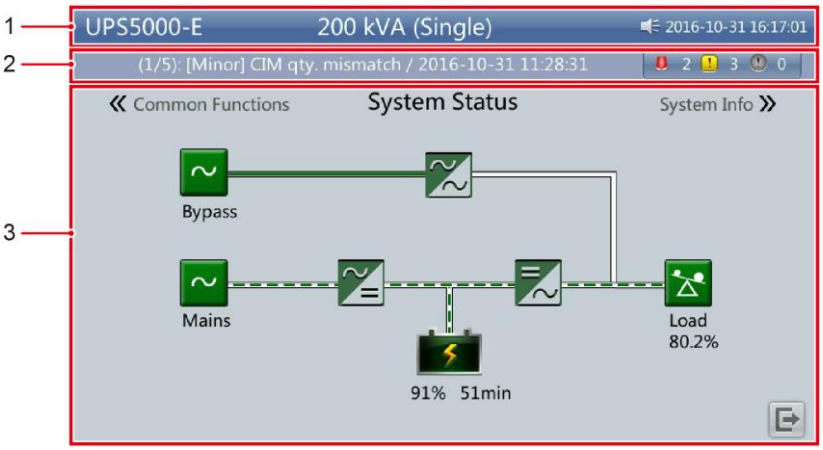

Copyright © Huawei Technologies Co., Ltd.

Table 4-2 Main screen description

Number	Area	Function
1	Status bar	Displays the UPS model, capacity, configuration, current date and time, USB flash drive status, and buzzer status.
2	Alarm bar	Displays active alarms in a scrolling list and the number of active alarms based on severity. Tap the alarm icon area to open the active alarm page.
3	Informatio n area	Displays the power flow as well as key information such as load and battery information. Tap the **Bypass**, **Mains**, **Battery**, and **Load** icons to view details.

Table 4-3 describes the functions of common buttons.

Table 4-3 Functions of common buttons

Button	Function
	Returns to the main screen.
	Scrolls the page down.
	Scrolls the page up.
	Returns to the upper-level menu.
	Logs a user out.

4.1.3 System Info Screen

On the main screen, tap **System Info**. The **System Info** screen is displayed, as shown in Figure 4-6.

Copyright © Huawei Technologies Co., Ltd.

Figure 4-6 System Info screen

4.1.3.1 Module Data Screen

On the **System Info**, tap the UPS picture. On the **Module Data** screen, select a module to view its running data. indicates the selected module, as shown in Figure 4-7.

Figure 4-7 Module Data screen

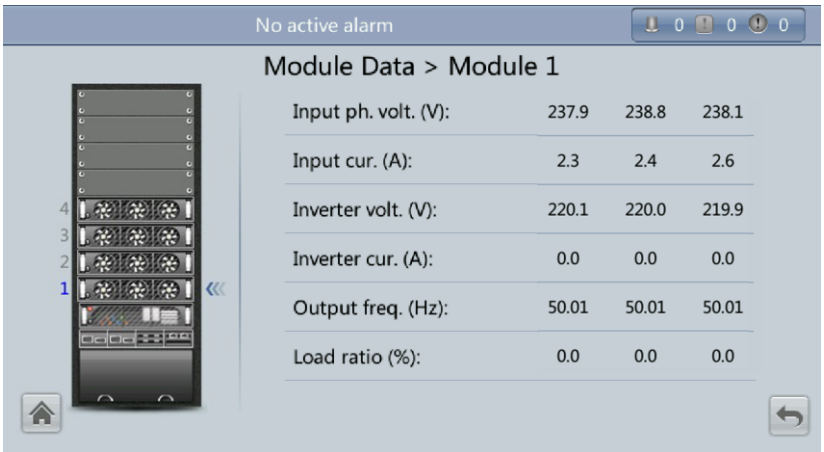

4.1.3.2 Runn Info Screen

On the **System Info** screen, tap to access the **Runn Info** screen. On this screen, **AC Output**, **UPS Load**, **Mains Input**, and **Bypass Input** can be queried, as shown in Figure 4-8 and Figure 4-9.

Copyright © Huawei Technologies Co., Ltd.

Figure 4-8 Runn Info screen 1

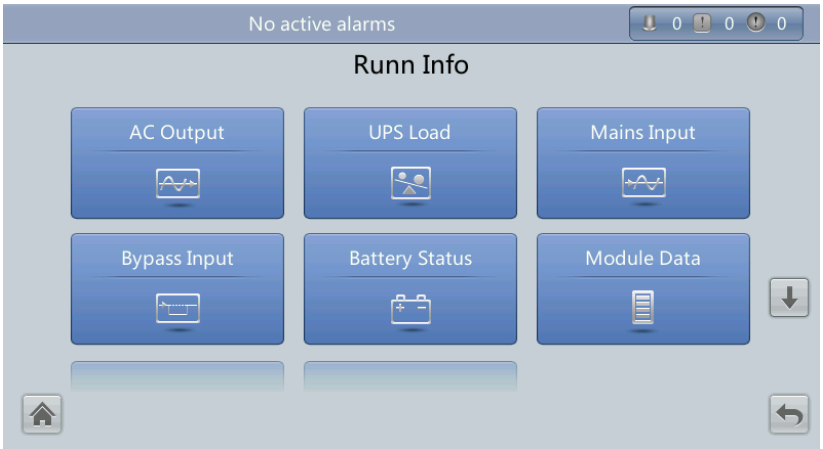

Figure 4-9 Runn Info screen 2

NOTE

- On the **System Info** > **Settings** > **Advanced Param.** screen, if the **Current equal. detection** is set to **Enable**, and the number of inverter modules is greater than or equal to 2, the **Mod. Cur. Eql. Data** is displayed on the **Runn Info** screen.
- On the **System Info** > **Settings** > **CIM Param.** > **Basic Param.** screen, if the **Number of battery strings** is not **0**, the **Battery Detailed Data** is displayed on the **Runn Info** screen.

Copyright © Huawei Technologies Co., Ltd.

AC Output

Figure 4-10 AC Output screen

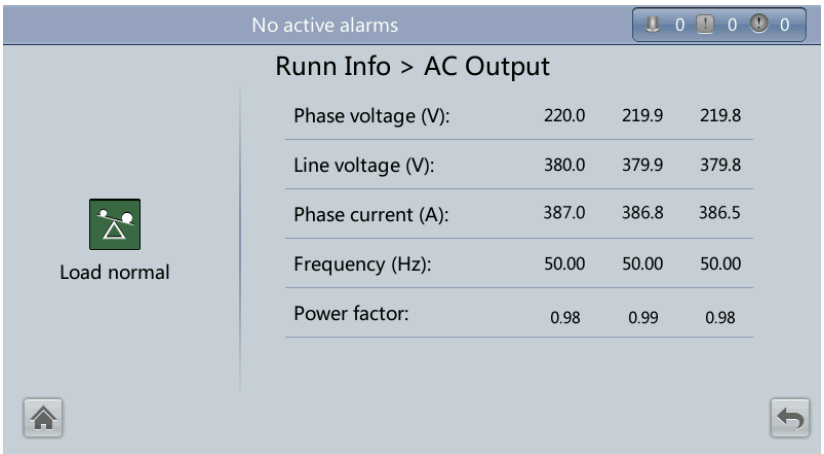

Item	Description
Phase voltage (V)	AC output phase voltage
Line voltage (V)	AC output line voltage
Phase current (A)	AC output phase current
Frequency (Hz)	AC output frequency
Power factor	Proportion of output active power to output apparent power.

UPS Load

Figure 4-11 UPS Load screen

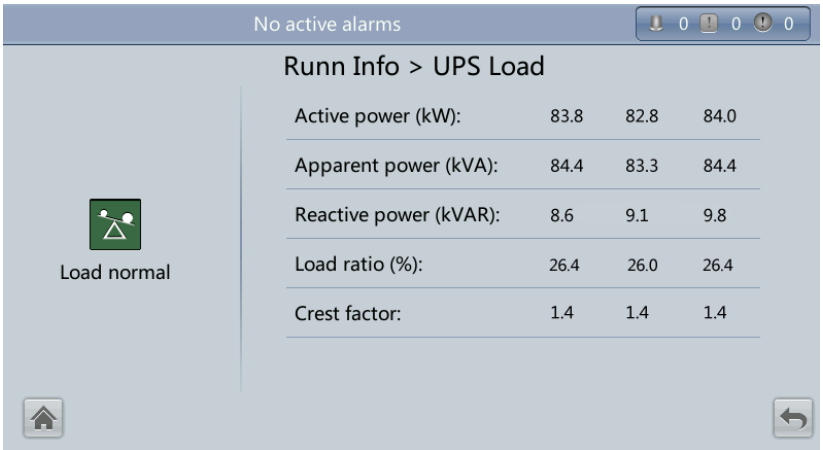

Copyright © Huawei Technologies Co., Ltd.

Item	Description
Active power (kW)	Output active power of each phase on the UPS.
Apparent power (kVA)	Output apparent power of each phase on the UPS.
Reactive power (kVAR)	Output reactive power of each phase on the UPS, that is, square root of the difference between the square of output apparent power and the square of output active power.
Load ratio (%)	Load ratio of each phase on the UPS, that is, proportion of actual power to rated power.
Crest factor	Proportion of the peak value of load current to the valid value.

Mains Input

Figure 4-12 Mains Input screen

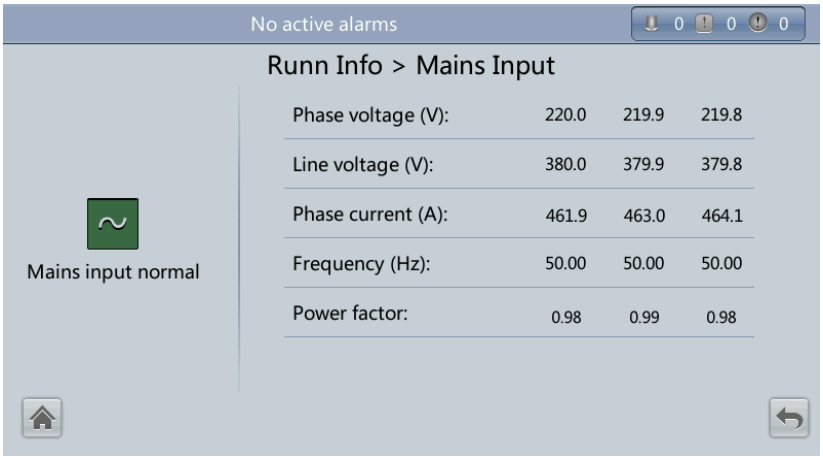

Item	Description
Phase voltage (V)	Mains input phase voltage
Line voltage (V)	Mains input line voltage
Phase current (A)	Mains input phase current
Frequency (Hz)	Mains input frequency
Power factor	Proportion of the mains input active power to the mains input apparent power.

Copyright © Huawei Technologies Co., Ltd.

Bypass Input

Figure 4-13 Bypass Input screen

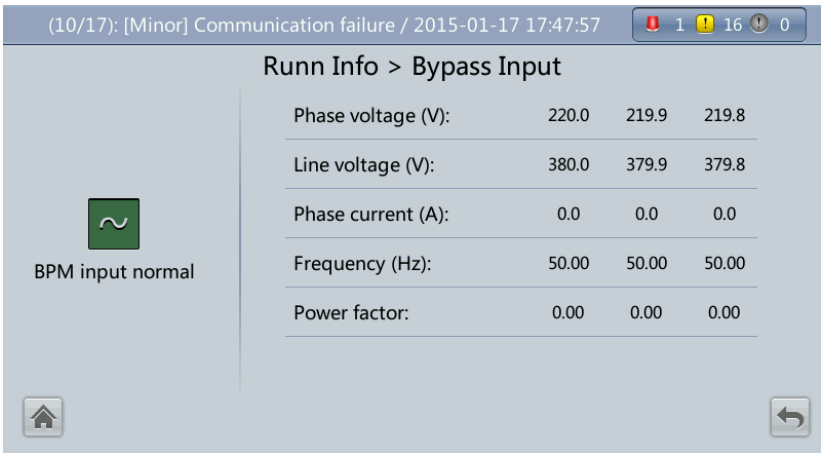

Item	Description
Phase voltage (V)	Bypass input phase voltage
Line voltage (V)	Bypass input line voltage
Phase current (A)	Bypass input phase current
Frequency (Hz)	Bypass input frequency
Power factor	Proportion of the bypass input active power to the bypass input apparent power.

Battery Status

Figure 4-14 Battery Status screen

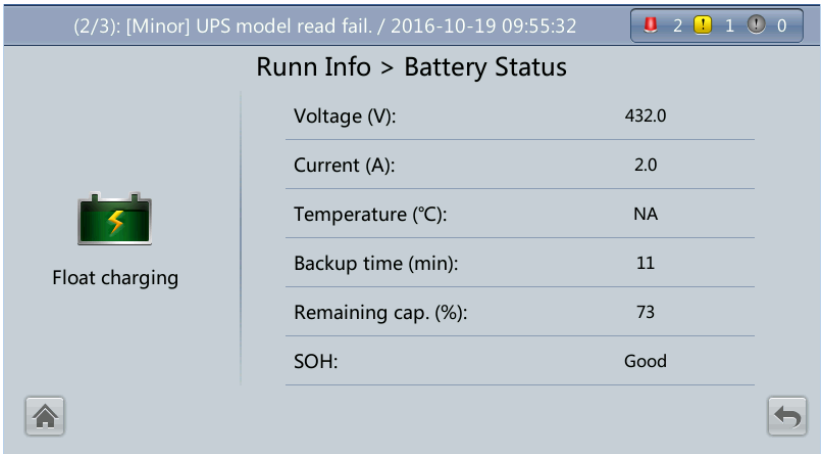

Copyright © Huawei Technologies Co., Ltd.

Item	Description
Battery Status	The value can be **Not connected**, **Equalized charging**, **Float charging**, **Hibernating**, **discharging**, or **Not chg. or dis**.
Voltage (V)	Voltage of the battery string.
Current (A)	Current of the battery string (the current is + when batteries are being charged and - when discharged).
Temperature (℃)	Battery operating temperature (A battery sensor is required. If the sensor is not installed, **NA** is displayed).
Backup time (min)	Battery backup time estimated at the current load.
Remaining cap. (%)	Remaining battery capacity.
SOH	State of health.

Total Runtime

Figure 4-15 Total Runtime screen

Item	Description
Bypass runtime (h)	Time for which the UPS runs in bypass mode.
Inv. runtime (h)	Time for which the UPS runs in inverter mode.

NOTE

The value must be an integer. For example:

Copyright © Huawei Technologies Co., Ltd.

- If the value is less than 1, the value takes 0.
- If the value is greater than or equal to 1 and less than 2, the value takes 1.

Environment Data

Figure 4-16 Environment Data screen

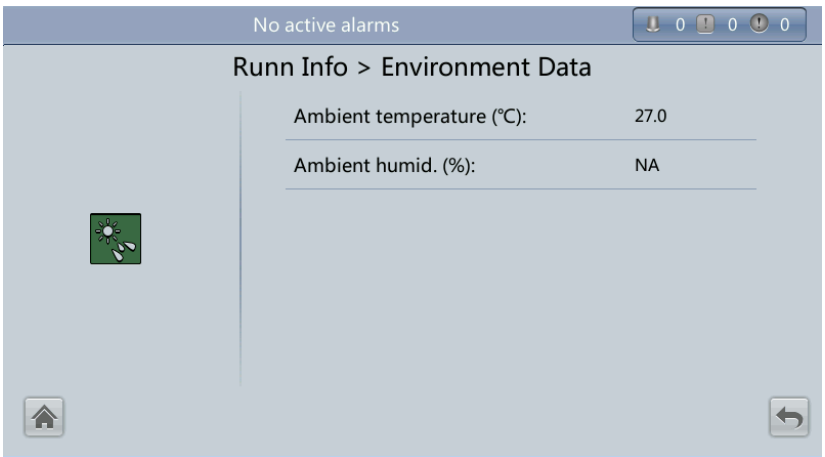

Item	Description
Ambient temperature (℃)	Temperature measured by the ambient temperature and humidity sensor (The sensor needs to be installed. If the sensor is not installed, the data uploaded by the bypass module is displayed.)
Ambient humid. (%)	Humidity measured by the ambient temperature and humidity sensor. If the sensor is not installed, **NA** is displayed.

Mod. Cur. Eql. Data

Figure 4-17 shows the **Mod. Cur. Eql. Data** screen.

Copyright © Huawei Technologies Co., Ltd.

Figure 4-17 Mod. Cur. Eql. Data screen

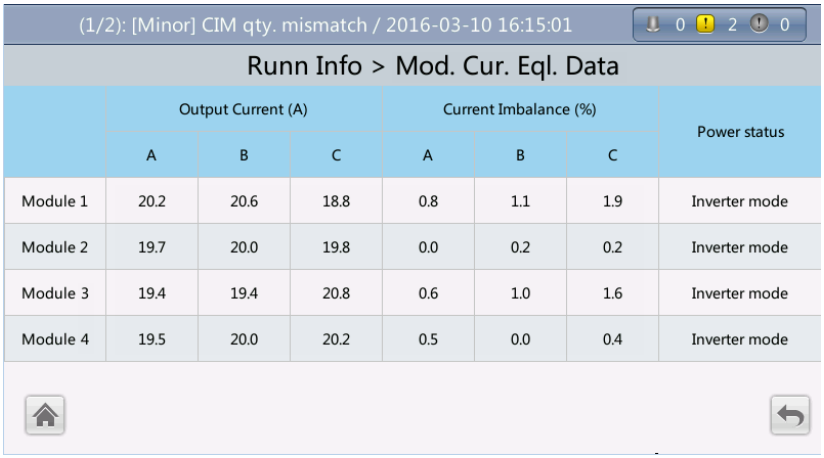

	Output Current (A)			Current Imbalance (%)			Power status
	A	B	C	A	B	C	
Module 1	20.2	20.6	18.8	0.8	1.1	1.9	Inverter mode
Module 2	19.7	20.0	19.8	0.0	0.2	0.2	Inverter mode
Module 3	19.4	19.4	20.8	0.6	1.0	1.6	Inverter mode
Module 4	19.5	20.0	20.2	0.5	0.0	0.4	Inverter mode

Battery Detailed Data

Figure 4-18 shows the **Battery Detailed Data** screen.

Figure 4-18 Battery Detailed Data screen

This screen details battery string data and single battery data in each battery string.

NOTE

The N in **String N Battery Data** should be less than or equal to 4.

Figure 4-19 shows the **Batt. String Data** screen.

Copyright © Huawei Technologies Co., Ltd.

Figure 4-19 Batt. String Data screen

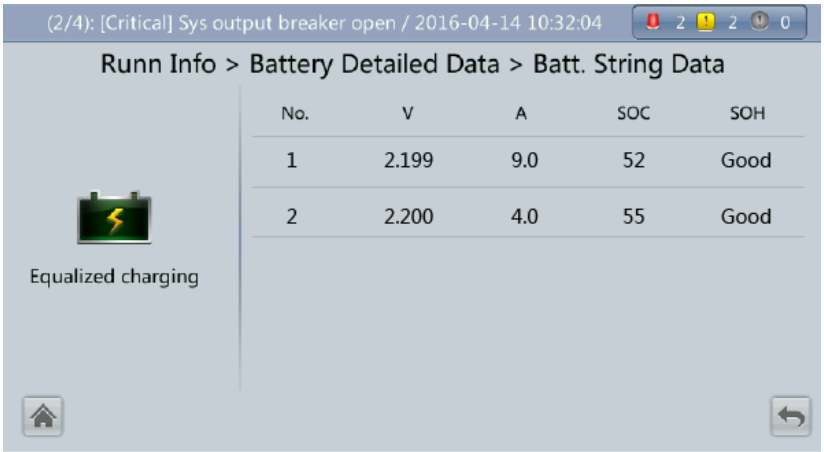

No.	V	A	SOC	SOH
1	2.199	9.0	52	Good
2	2.200	4.0	55	Good

This screen displays the voltages, currents, SOC, and SOH of each battery string.

Figure 4-20 shows the **String N Battery Data** screen.

Figure 4-20 String N Battery Data screen

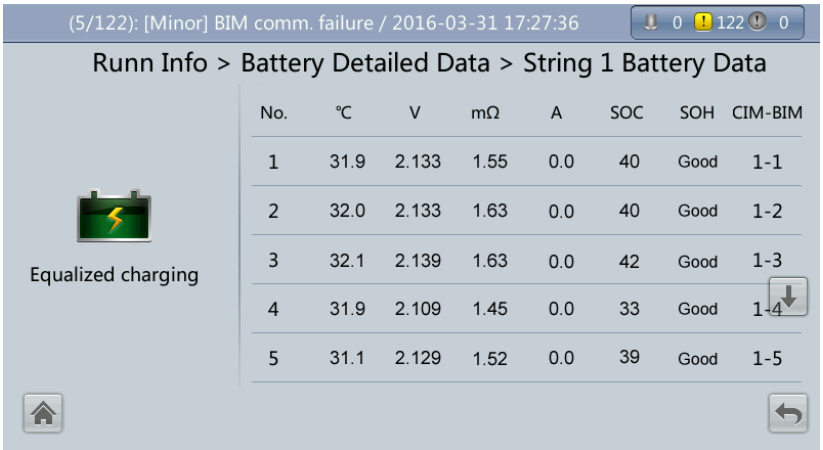

No.	℃	V	mΩ	A	SOC	SOH	CIM-BIM
1	31.9	2.133	1.55	0.0	40	Good	1-1
2	32.0	2.133	1.63	0.0	40	Good	1-2
3	32.1	2.139	1.63	0.0	42	Good	1-3
4	31.9	2.109	1.45	0.0	33	Good	1-4
5	31.1	2.129	1.52	0.0	39	Good	1-5

This screen displays the temperature, voltage, internal resistance, current, SOC, and SOH of a single battery in the battery string, and the mapping between the CIM and BIM.

4.1.3.3 Alarms Screen

Tap on the **System Info** screen to enter the **Alarms** screen. On the **Alarms** screen, active alarms and historical alarms, clear faults, and the buzzer control can be viewed, as shown in Figure 4-21.

Copyright © Huawei Technologies Co., Ltd.

Figure 4-21 Alarms screen

Active Alarms

Figure 4-22 shows the **Active Alarms** screen.

Figure 4-22 Active Alarms screen

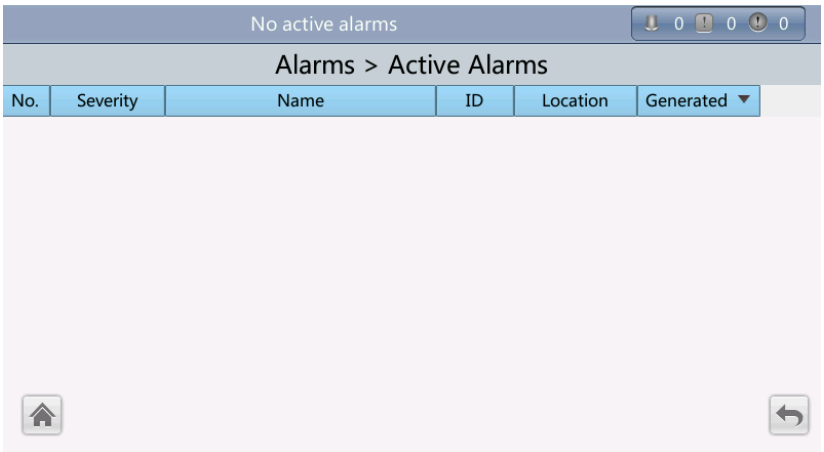

This screen displays alarm information including the severity, name, ID, location, and generation time.

Historical Alarms

Figure 4-23 shows the **Historical Alarms** screen.

Copyright © Huawei Technologies Co., Ltd.

Figure 4-23 Historical Alarms screen

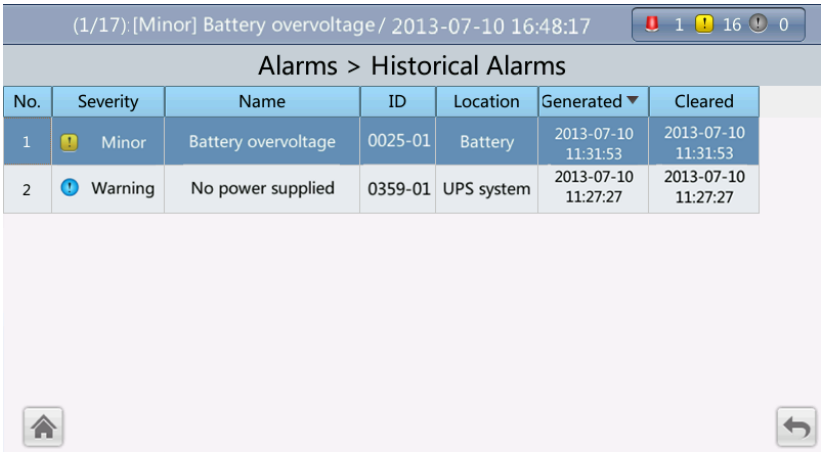

This screen displays alarm information including the severity, name, ID, location, generation time, and clear time.

Buzzer Off

Two buzzer menus are available:

- **Buzzer On**

  If this selection is enabled, when a critical alarm, a minor alarm, or a certain warning is generated the buzzer is activated.

- **Buzzer Off**

  If this selection is enabled, the buzzer is muted.

If the buzzer is enabled, **Buzzer Off** is displayed on the operation screen. Figure 4-24 shows the **Buzzer Off** screen.

Figure 4-24 Buzzer Off screen

Copyright © Huawei Technologies Co., Ltd.

Clear Faults

Figure 4-25 shows the **Clear Faults** menu (a dialog box is displayed to confirm the action). Tap **Clear Faults**. If you have not logged in, a login screen is displayed. Enter a user name and password, and tap .

Figure 4-25 Clear Faults screen

NOTE

- For details about default user names, preset passwords, and user rights, see Table 4-5.
- If an incorrect password is entered three consecutive times, the account will be locked out for 5 minutes.

4.1.3.4 Settings Screen

On the **System Info** screen, tap . If you have not logged in, a login screen is displayed, as shown in Figure 4-26.

Figure 4-26 Login screen

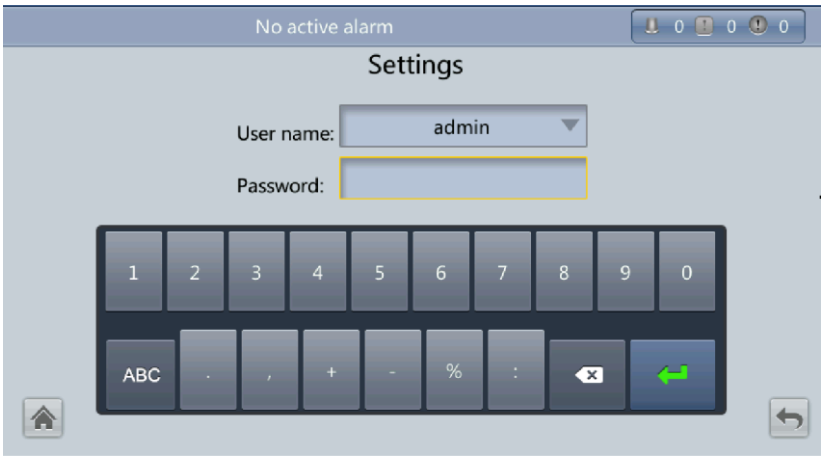

On the login screen, enter a preset user name and password, and tap to log in. The **Settings** screen is displayed, as shown in Figure 4-27 and Figure 4-28.

Copyright © Huawei Technologies Co., Ltd.

NOTE

- Table 4-5 lists the default user names and preset passwords and describes the permission of the default users.
- If you enter incorrect passwords for three consecutive times, you will be locked out for 5 minutes.

Figure 4-27 Settings screen 1

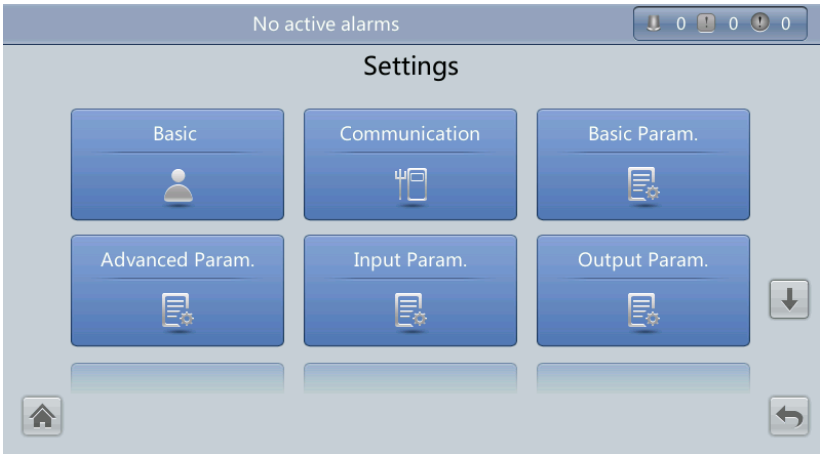

Figure 4-28 Settings screen 2

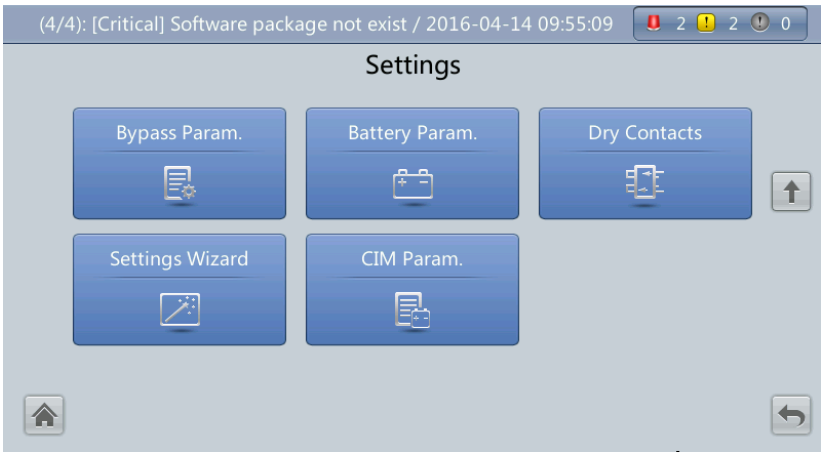

Basic Settings

NOTICE

Set the date and time correctly. Incorrect time display in running and alarm information would lead to analysis errors during maintenance or repair.

Copyright © Huawei Technologies Co., Ltd.

Figure 4-29 Basic screen 1

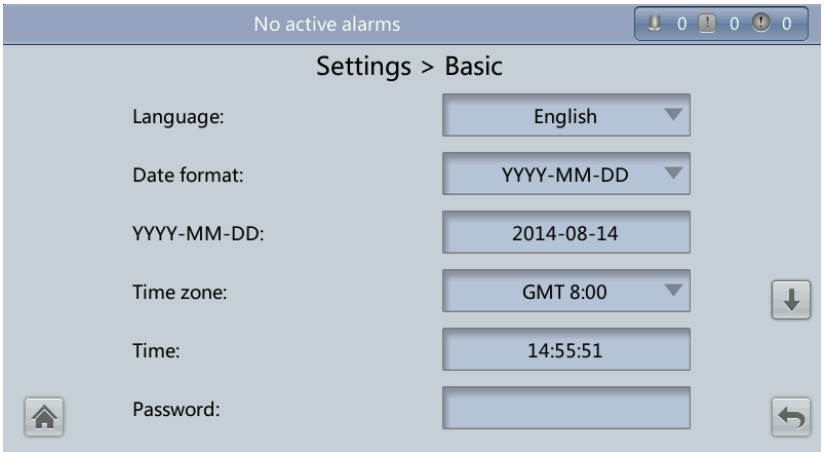

Figure 4-30 Basic screen 2

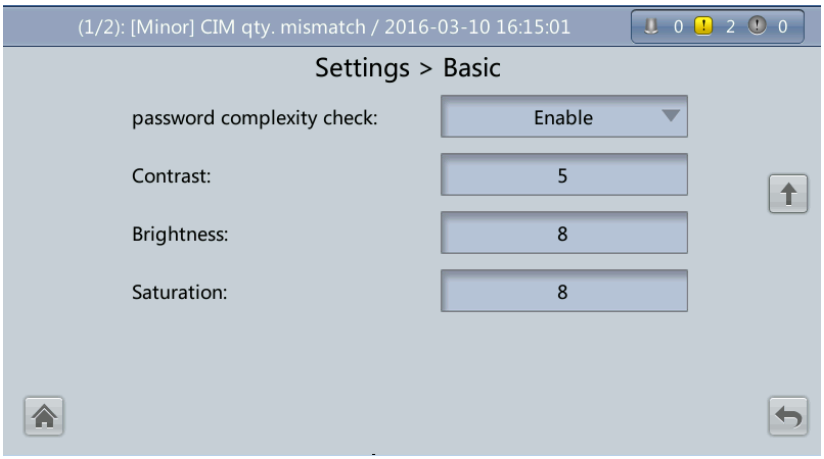

Item	Description
Language	Twelve languages are supported, including English, Chinese, Spanish, Dutch, French, German, Italian, Polish, Portuguese, Russian, Swedish, and Turkish. The default language is English.
Password	The preset password is 000001. The password can be changed.
password complexity check	If the password complexity check is disabled, the user password is required to be a string of six to eight digits. If the password complexity check is enabled, the password is required to be a string of 6–20 characters and contain at least two types of characters.

Copyright © Huawei Technologies Co., Ltd.

Communications Settings

Figure 4-31 Communication screen 1

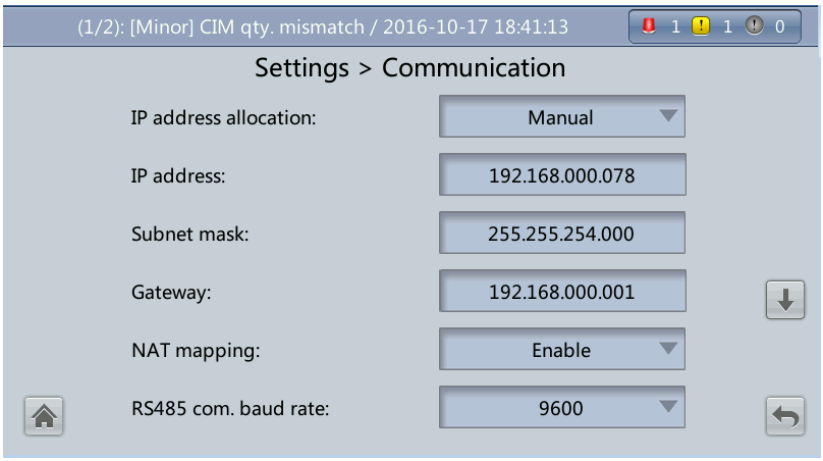

IP address allocation

- If the MDU is directly connected to a computer, the IP address can only be allocated manually. The IP addresses of the MDU and computer must be in the same network segment, and must be different.
- If the MDU is connected to a computer through an LAN switch or router with the DHCP function, the IP address can be allocated manually or automatically.
  - **Manual**: Check that their IP addresses are two different values on the same network segment. Set the UPS IP address to be in the same subnet as the PC IP address. Perform the bitwise AND operation for the UPS IP address and the PC IP address with the subnet mask respectively. If the operation results are the same, the two IP addresses are in the same subnet.

    AND operation rule: 1 AND 1 = 1, 1 AND 0 = 0, 0 AND 1 = 0, 0 AND 0 = 0. That is when the corresponding bits are both 1, the result is 1. In other cases, the result is 0.

Table 4-4 Bitwise AND operation example

-	PC IP address (182.98.225.125)	UPS IP address (182.98.225.112)
PC IP address/UPS IP address	10110110.01100010.11100001.01111101	10110110.01100010.11100001.01110000
Subnet mask (255.255.255.192)	11111111.11111111.11111111.11000000	11111111.11111111.11111111.11000000
Bitwise AND operation result	10110110.01100010.11100001.01000000	10110110.01100010.11100001.01000000

  - **Automatic**: The MDU automatically searches for available IP addresses in the connected network. Ensure that the MDU and PC are on the same network segment.

Copyright © Huawei Technologies Co., Ltd.

Item	Description
IP address	Set an Ethernet IP address that ranges from 1.0.0.0 to 223.255.255.255. The default value is **192.168.0.10**. **NOTICE** Ensure that the UPS IP address is unique on the network segment. Otherwise, the WebUI display function may not function properly.
Subnet mask	Set an Ethernet subnet mask that ranges from 0.0.0.0 to 255.255.255.255. The default value is **255.255.255.0**.
Gateway	Set an Ethernet gateway that ranges from 1.0.0.0 to 223.255.255.255. The default value is **192.168.0.1**.
NAT mapping	NAT means network address translation. If it is set to **Disable**, an internal IP address cannot be accessed from the Internet.
RS485 com. baud rate	Baud rate depends on the network management conditions.

Figure 4-32 Communication screen 2

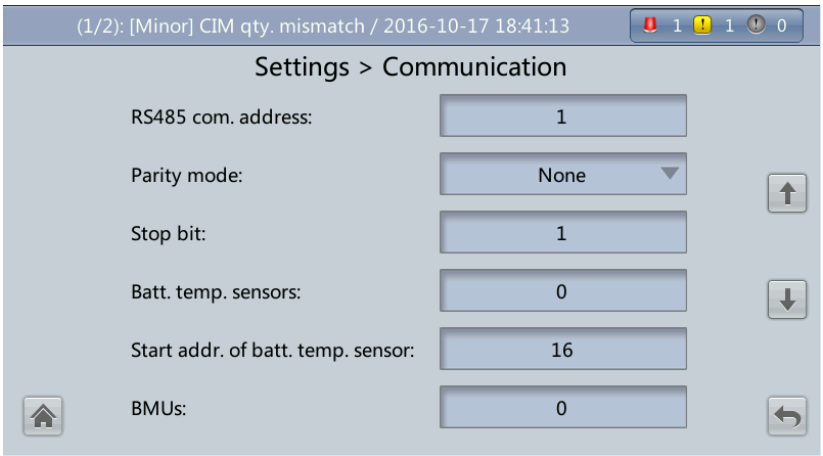

Item	Description
RS485 com. address	Set an address that ranges from 1 to 254 for this port.
Parity mode	Verify the validity of RS485 communication characters. When a device node adopts RS485 communication, ensure that the parity modes for the device nodes are set to the same mode. Available parity modes include **None**, **Odd**, and **Even**.
Stop bit	Stop bit in the Modbus communication frame format. When the UPS is connected over the serial port Modbus, set this parameter based on the frame format that the upstream device Modbus supports.
Batt. temp.	A maximum of four battery temperature sensors can be cascaded.

Copyright © Huawei Technologies Co., Ltd.

Item	Description
sensors	
Start addr. of batt. temp. sensor	Set this parameter by using the DIP switch on the battery temperature sensor. The address range is 16–28. Ensure that the address set on the LCD is the same as that set for the DIP switch. Otherwise, communication fails.
BMUs	A maximum of 12 BMUs can be cascaded.

Figure 4-33 Communication screen 3

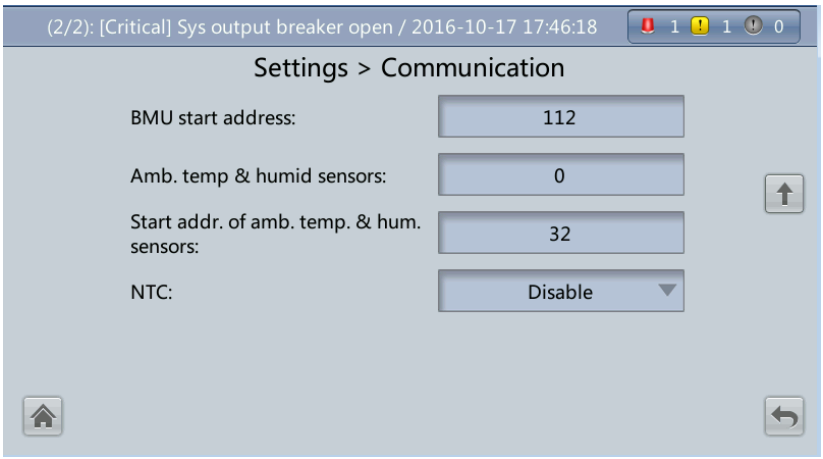

Item	Description
BMU start address	Use the DIP switch on the BMU to set the BMU start address to 112. Ensure that the address set on the LCD is the same as that set for the DIP switch. Otherwise, communication cannot be implemented.
Amb. temp & humid sensors/Start addr. of amb. temp. & hum. sensors	An ambient temperature and humidity sensor has the same appearance as a battery temperature sensor. The two types of sensors can be cascaded (up to four). The ambient temperature and humidity sensor address range is 32–44, which is different from the battery temperature sensor. Therefore, you can use the sensor as an ambient temperature and humidity sensor or battery temperature sensor by setting the address.
NTC	The short-distance battery temperature sensor monitors the ambient temperature near batteries, and ensures that batteries work reliably and securely. The default status is **Disable**. If a short-distance battery temperature sensor is configured, set **NTC** to **Enable**.

Basic Parameters

Copyright © Huawei Technologies Co., Ltd.

NOTICE

Single/Parallel, **Output voltage level** and **Output frequency**, as well as **Battery capacity** and **Number of cells** must be the same as the actual values. Otherwise, an alarm may be generated, or other serious faults may occur.

Set basic system and battery parameters, as shown in Figure 4-34.

Figure 4-34 Basic Param. screen

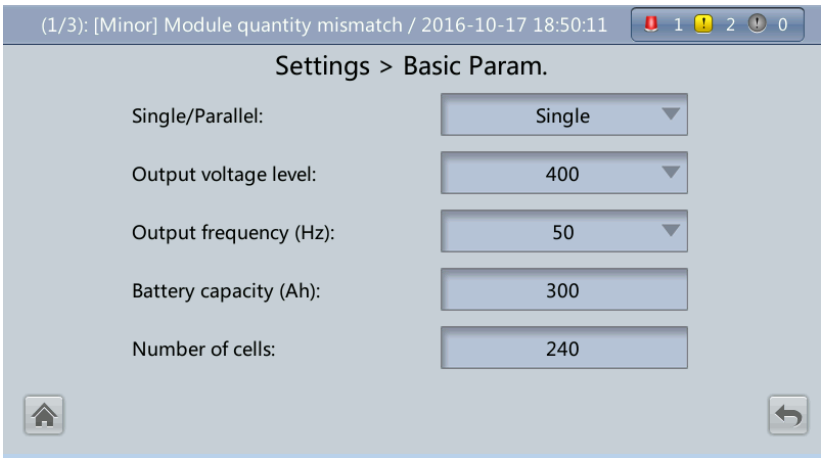

Output voltage level

The value for the system output voltage level can be set as 380 V, 400 V (default), or 415 V. After the parameter value is changed, the upper thresholds for the bypass voltage are restored to the default values. The parameter is configurable after the inverter shuts down.

NOTE

If **Output voltage level** is 380 V or 400 V, the default upper threshold is 15% and the default lower threshold is 20%. If **Output voltage level** is 415 V, the default upper threshold is 10% and the default lower threshold is 20%. The parameter is configurable after the inverter shuts down.

Item	Description
Single/Parallel	The value for the UPS running mode can be **Single** (default) or **Parallel**.
Output frequency (Hz)	The value for the system output frequency can be 50 Hz (default) or 60 Hz.
Battery capacity (Ah)	The value range for the battery string capacity is 5 Ah to 9999 Ah. 300 Ah is set by default for the 200 kVA UPS, and 350 Ah is set by default for the 300 kVA UPS.
Number of cells	Each 12 V battery consists of six cells. The value range is 180 to 276. The default value is 240.

Copyright © Huawei Technologies Co., Ltd.

NOTE

- A cell consists of electrodes and electrolytes, which is the basic unit for the battery. Each cell has a nominal voltage of 2 V. A battery is a module consisting of single or multiple cells in a shell. Each battery has a nominal voltage of 2 V or 12 V. The number of cells must be a multiple of 12 (for example, 180 and 192).
- **Cell float voltage**, **Cell equalized volt**, **Float volt. temp. comp. coef.**, and **EOD voltage threshold** are set for cells.

Advanced Parameters

NOTICE

Set **System capacity** and **Power module capacity** according to site specifications. Incorrect settings may generate an overload alarm, which affects normal UPS running.

Figure 4-35 Advanced Param. screen 1

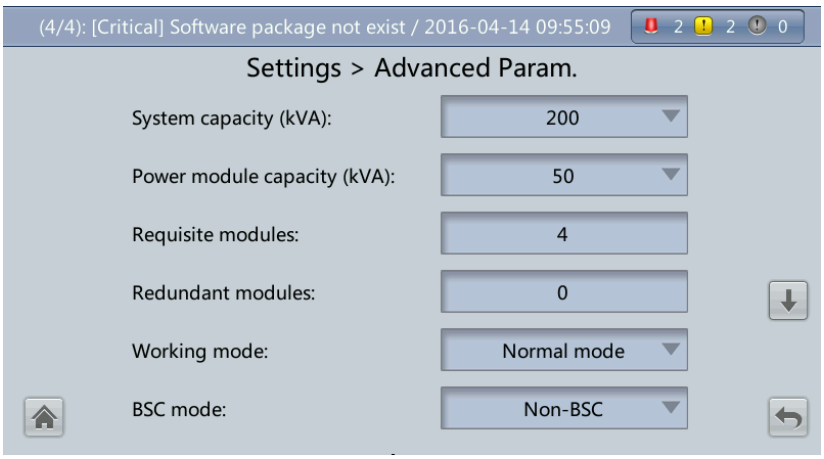

Item	Description
System capacity (kVA)	The rated system capacity equals the capacity of each power module multiplied by the number of requisite power modules. If this is set incorrectly, the **Module quantity mismatch** alarm will be generated.
Power module capacity (kVA)	Rated power module capacity.
Requisite modules	Matches the system capacity.
Redundant modules	Set in accordance with loading capacity and redundant requirements.
Working mode	The value can be **Normal mode** (default), **Converter mode**, **Self-load mode**, or **ECO**.

Copyright © Huawei Technologies Co., Ltd.

Item	Description
BSC mode	• The value can be **Non-BSC mode** (default) or **BSC mode** (set when the system is a dual-bus system). • A dual-bus system consists of the master and slave BSC systems. You can specify the master and slave BSC systems (one master and one slave) and change the settings under the guidance of maintenance engineers. Set the master and slave BSC systems to master and slave BSC modes respectively. **NOTE** Ensure that the BSC signal cable between the master and slave BSC systems is properly connected and that BSC-related hardware is properly installed.

Figure 4-36 Advanced Param. screen 2

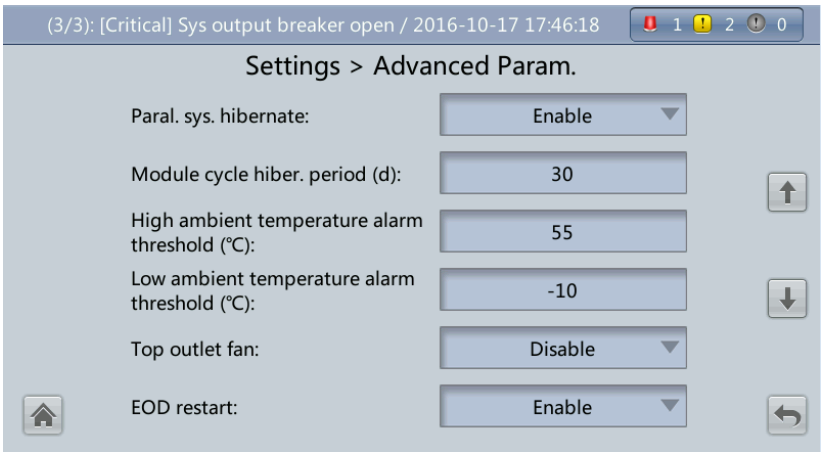

Item	Description
Paral. sys. hibernate	If the customer load is light, set parallel hibernation to alternate modules in hibernation to prolong their service life as well as improve system efficiency.
Module cycle hiber. period (d)	A cycle of 1 to 100 days can be set. The parameter is set to **30 days** by default.
High ambient temperature alarm threshold (℃)	An alarm is generated when the ambient temperature reaches or exceeds the threshold specified by this parameter.
Low ambient temperature alarm	A warning is generated when the ambient temperature is lower than the parameter value.

Copyright © Huawei Technologies Co., Ltd.

Item	Description
threshold (℃)	
Top outlet fan	If a top outlet fan is configured, check the fan running status after enabling this parameter.
EOD restart	If the mains is not functioning normally, the UPS will transfer to battery mode. When batteries reach the EOD threshold, the bypass is disabled, and **EOD restart** is enabled, the UPS will restart as soon as the mains resumes. If **EOD restart** is disabled, clear the alarm manually or enable the restart function for the UPS.

Figure 4-37 Advanced Param. screen 3

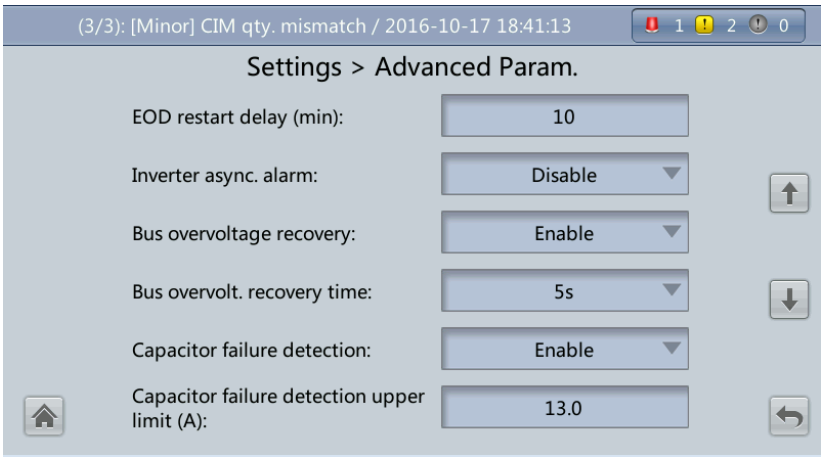

Item	Description
EOD restart delay (min)	If **EOD restart** is set to **Enable**, the UPS starts working after **EOD restart delay** when the mains recovers from an EOD power failure. The value range is 1–1440 min, and the default value is 10 min.
Inverter async. alarm	Specifies whether the **Inverter async.** alarm is displayed when the inverter does not track the bypass input. The normal power supply is not affected regardless of whether the parameter is **Enable** or **Disable**.
Bus overvoltage recovery	Specifies whether to automatically clear the alarm and restart the power module when the rectifier or inverter shuts down due to a bus overvoltage alarm. If **Bus overvoltage recovery** is set to **Enable**, the bus overvoltage alarm is automatically cleared, and the rectifier and inverter automatically start when the bus voltage recovers (less than 420 V) within **Bus overvolt. recovery time**. When **Bus overvoltage recovery** is set to **Disable**, the bus overvoltage alarm cannot be automatically cleared, and the rectifier and inverter cannot automatically start. The default value is **Enable**.
Bus overvolt. recovery	If **Bus overvoltage recovery** is set to **Enable**, the bus overvoltage alarm is automatically cleared, and the rectifier and inverter automatically start when the bus voltage recovers (less than 420 V) within **Bus overvolt.**

Copyright © Huawei Technologies Co., Ltd.

Item	Description
time	**recovery time**. The default value is **5s**.
Capacitor failure detection	If **Capacitor failure detection** is set to **Enable**, the power module (power unit) performs inverter capacitor fault detection based on the settings of **Capacitor failure detection upper limit** and **Capacitor failure detection lower limit**. If the power module determines that the inverter capacitor is faulty, it shuts down the inverter to prevent the fault from expanding. The default value is **Enable**.
Capacitor failure detection upper limit (A)	The value range of **Capacitor failure detection upper limit** is 10–13 A. When the inverter capacitor current exceeds the current specified by this parameter, the power module determines that the inverter capacitor is faulty and shuts down the inverter. The default value is **13 A**.

Figure 4-38 Advanced Param. screen 4

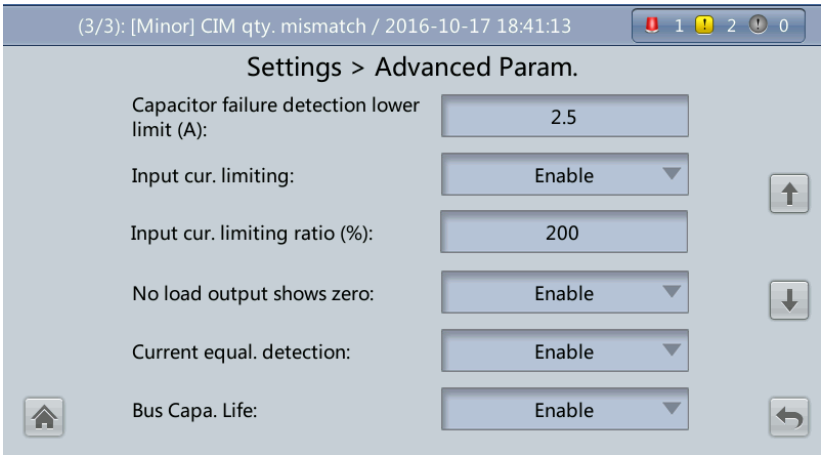

Item	Description
Capacitor failure detection lower limit (A)	The value range of **Capacitor failure detection lower limit** is 0–2.5 A. When the inverter capacitor current is lower than the current specified by this parameter, the power module determines that the inverter capacitor is faulty and shuts down the inverter. If **Capacitor failure detection lower limit** is set to 0 A, the power module does not perform inverter capacitor fault detection. The default value is **2.5 A**.
Input cur. limiting	Enable or disable input current limiting for the UPS to protect the D.G.
Input cur. limiting ratio (%)	Limit the input current to protect the D.G. The value can be 50%–200%. The default value is 200%.
No load output shows zero	If this parameter is set to **Enable**, the output current and load ratio will be displayed as 0 in the case of zero load. If this parameter is set to **Disable**, the output current and load ratio will not be displayed as 0 in the case of

Copyright © Huawei Technologies Co., Ltd.

Item	Description
	zero load.
Current equal. detection	Monitors the current differences between racks or modules. If this parameter is set to **Enable**, the **Mod. Cur. Eql. Data** can be viewed on the running information screen. This parameter is set to **Disable** by default.
Bus Capa. Life	If **Bus Capa. Life** is set to **Enable**, the UPS detects the bus capacitor lifespan.

Figure 4-39 Advanced Param. screen 5

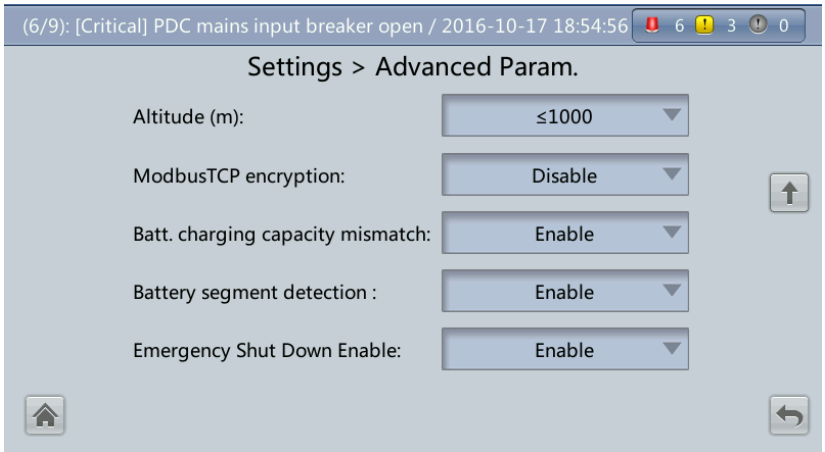

Item	Description
Altitude (m)	Set this parameter based on the altitude of the place where the rack is used. The default value is less than or equal to 1000.
ModbusTCP Encryption	If Modbus TCP is used for communication, communication links implement encryption based on the selected encryption mode or do not implement encryption.
Batt. charging capacity mismatch	This parameter specifies whether the alarm is enabled. An alarm is generated only when the alarm is enabled and the alarm generating conditions are met.
Battery segment detection	This parameter specifies whether the alarm is enabled. An alarm is generated only when the alarm is enabled and the alarm generating conditions are met.
Emergency Shut Down Enable	Indicates whether to enable emergency power-off (EPO). EPO is performed only when this parameter is enabled and the EPO switch is triggered.

Copyright © Huawei Technologies Co., Ltd.

Input Parameter Settings

Figure 4-40 Input Param. screen

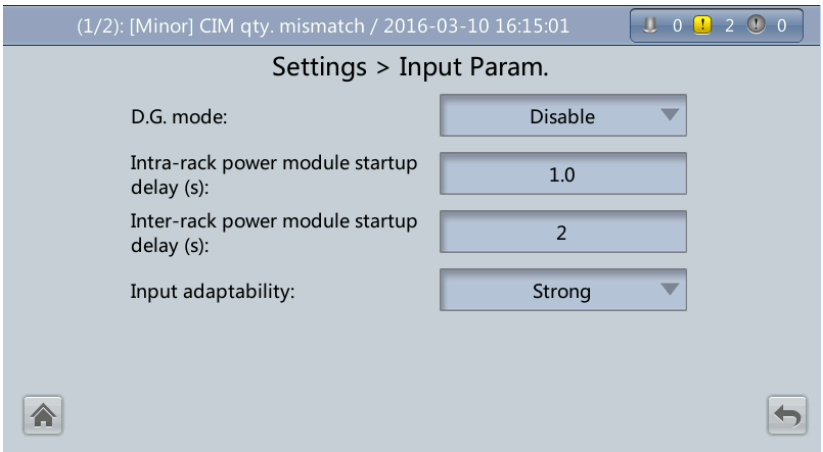

NOTE

Retaining default input parameter settings is advised.

Item	Description
D.G. mode	Set this parameter when a D.G. connects to the input PDC. Select **Enable** when a D.G. is detected over dry contacts.
D.G. power limiting (kVA) and **D.G. charger power ratio (%)**	Set these two parameters to control the valid input current and limiting input current, which prevents load impact and facilitates better cooperation between the UPS and the D.G. The value range of **D.G. power limiting (kVA)** is 0–5000 kVA. The default value is 250 kVA for the 200 kVA UPS, and the default value is 400 kVA for the 300 kVA UPS. The value range of **D.G. charger power ratio (%)** is 0%–100%, and the default value is 0%.
Intra-rack power module start delay (s) and **Inter-rack power module start delay (s)**	These two parameters enable the UPS to control the interval that each rack (or module) transfers from battery mode to normal mode, which reduces the impact on the generator or power grid. In the case of battery undervoltage, the system automatically shortens the delay for transferring to normal mode to 1/8 of the normal delay to accelerate the transfer and prevent battery overdischarge. **Intra-rack power module start delay (s)** can be set to a value ranging from 0.5 to 120. The preset value of **Intra-rack power module start delay (s)** depends on the preset number of power modules. The preset value is 2.0, 1.0, and 0.5 for 1–5, 6–10, and 10–20 power modules respectively. **Inter-rack power module start delay (s)** can be set to a value ranging from 2 to 120. The preset value of **Inter-rack power module start delay (s)** is 5.0. The start delay of a module in a rack varies depending on the rack number and module number. #1 module in rack 1 does not have a start delay.
Input adaptability	The value of **Input adaptability** can be **Strong** or **Weak**. Strong input adaptability applies to the D.G. or input sources whose input current has high frequency oscillation. In this mode, the total distortion of the input current waveform (THDi) is poor, but the system is stable. Weak input

Copyright © Huawei Technologies Co., Ltd.

Item	Description
	adaptability is suitable for mains and AC input sources. The default value is **Strong**.

Output Param. screen

Figure 4-41 Output Param. screen

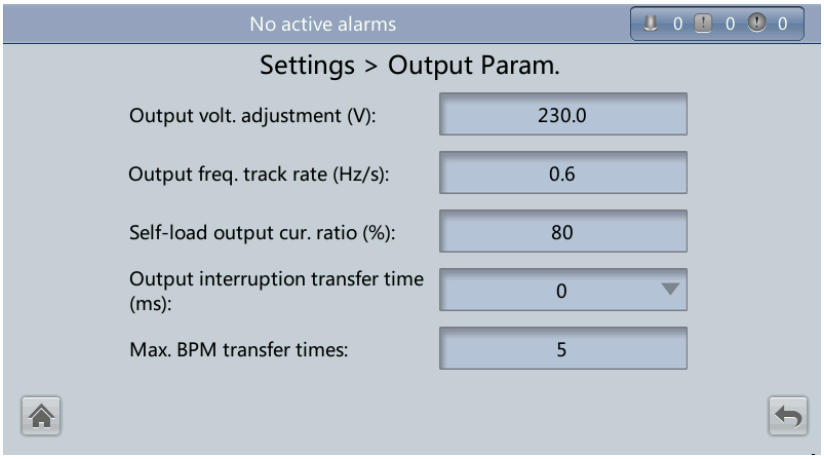

Item	Description
Output volt. adjustment (V)	The output voltage can be adjusted based on the onsite power distribution condition to ensure a minimum difference between the output voltage and the bypass voltage. This facilitates uninterruptible transfer from normal mode to bypass mode. The voltage adjustment range is ±5%. The default value is 220.0 when the voltage is 380 V, 230.0 when the voltage is 400 V, and 240.0 when the voltage is 415 V.
Output freq. track rate (Hz/s)	• The value range is 0.1–2.0 Hz/s, and the default value is 0.6 Hz/s. • This parameter can be adjusted based on site requirements. If **Output freq. track rate (Hz/s)** is slow, the inverter frequency is different from the bypass frequency when the bypass frequency changes. If output is overloaded or the inverter is faulty, an interruption (less than 20 ms) occurs when the UPS transfers from normal mode to bypass mode. If **Output freq. track rate (Hz/s)** is fast, the inverter frequency is unstable.
Self-load output cur. ratio (%)	Set the percentage of the output current to the rated output current when the UPS is in self-load mode. The value can be 20%–100%, and is 80% by default.
Output interruption transfer time (ms)	The interruption for the UPS to transfer from normal mode to bypass mode is 1–2 ms, and from bypass mode to normal mode is 0–20 ms. Set this parameter based on the output interruption time acceptable to loads. The default value is 0 ms.
Max. BPM	Cross currents occur during the transfer between bypass mode and normal

Copyright © Huawei Technologies Co., Ltd.

Item	Description
transfer times	mode, which impacts the system. This parameter specifies the number of transfers between bypass mode and normal mode within 1 hour, which ensures system security. The value can be 1 to 10, and is 5 by default.

Bypass Parameter Settings

Figure 4-42 Bypass Param. Settings

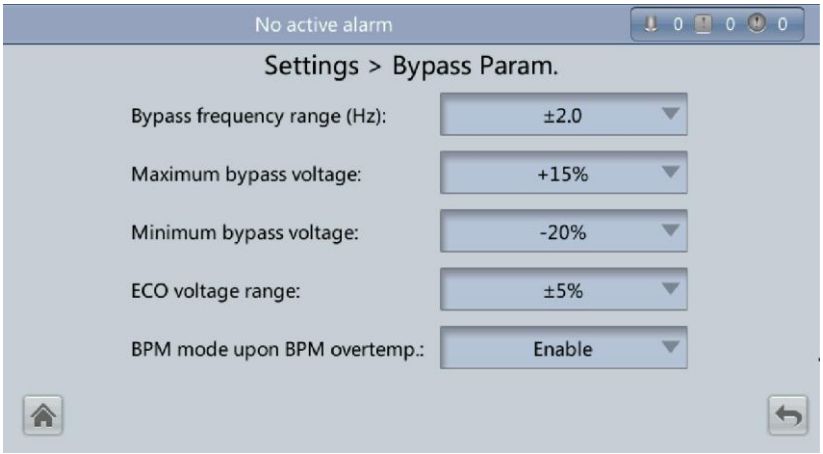

Item	Description
Bypass frequency range (Hz)	When the difference between the bypass input frequency and the rated frequency is greater than this value, the system determines that the bypass frequency is not normal, and that the bypass is unavailable. The frequency range must be greater than the ECO frequency range. The value range is ±0.5 Hz to ±6 Hz, ±2 Hz by default.
Maximum bypass voltage	When the difference between the bypass voltage and the rated voltage exceeds the upper threshold for the bypass voltage, the system determines that the bypass voltage is not normal and that the bypass is unavailable. **NOTE** • When the voltage level is 380 V, the value range is 10%, 15% (default), 20%, and 25%. • When the voltage level is 400 V, the value range is 10%, 15% (default), and 20%. • When the voltage level is 415 V, the value range is 10% (default) and 15%.
Minimum bypass voltage	When the difference between the bypass voltage and the rated voltage exceeds the lower threshold for the bypass voltage, the system determines that the bypass voltage is abnormal and that the bypass is unavailable. The value can be –10%, –15%, –20%, –30%, –40%, –50%, or –60%. The default value is –20%.
ECO voltage range	In ECO mode, when the difference between the bypass voltage and the rated voltage is greater than this value, the system determines that the ECO voltage is abnormal and transfers to normal mode. The values can be ±5%,

Copyright © Huawei Technologies Co., Ltd.

Item	Description
	±6%, ±7%, ±8%, ±9%, or ±10%. The default value is ±5%.
BPM mode upon BPM overtemp.	This parameter specifies whether to start bypass mode if overtemperature occurs.

Battery Parameter Settings

NOTICE

Battery parameter settings impact battery maintenance, battery lifespan, and UPS discharge time. When you set battery parameters, note the following:

Copyright © Huawei Technologies Co., Ltd.

- **Battery string sharing** is unavailable when **Single/Parallel** is set as **Single**.
- **Battery string sharing** affects the actual charge current and the estimated discharge time. An incorrect setting will cause a high or low charge current, which may damage the batteries. An incorrect estimated discharge time may cause a data backup fault.
- Retain default settings for **Chg. cur. limiting coef.** and **Cell float voltage**. Only professional maintenance personnel are allowed to change the settings.
- When you set parameters, ensure the following: **Chg. cur. limiting coef.** > **Transfer-to-equalized charging cur. coef**; **Dis. cur. 0.1C EOD** > **Dis. cur. 0.3C EOD** > **Dis. cur. 0.5C EOD** > **Dis. cur. 1.0C EOD**.
- **Battery type** must meet the actual situation. Currently, only **VRLA batt.** is supported.
- **Single batt. float chg. voltage deviation alarm thres.** and **Single batt. dis. voltage deviation alarm thres.** are used to check whether the batteries in each battery string have the same charge voltage and discharge voltage. When a value exceeds the specified range, an alarm is generated. The calculation formula is (Charge/Discharge voltage – Average voltage)/Average voltage x 100%. The charge/discharge voltage and average voltage are obtained from the BMU. If the BMU is not configured, these two parameters do not need to be set.

Figure 4-43 Battery Param. screen 1

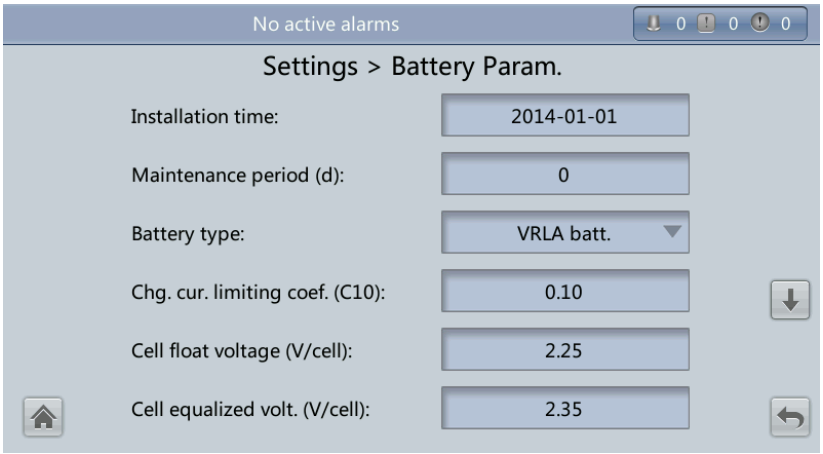

Item	Description
Installation time	A battery maintenance reminder is displayed when the maintenance time (counted from the installation time) comes.
Maintenance period (d)	The interval (set in days) for when the battery maintenance reminder is generated (based on installation time).
Battery type	Set the battery type based on actual conditions. Currently, only lead-acid batteries are supported.
Chg. cur. limiting coef. (C10)	The charging current limit is a multiple of the battery capacity. The value can be 0.05–0.15, and is 0.1 by default.
Cell float voltage	The float voltage value can be 2.23–2.27 V/cell, and is 2.25 V/cell by default. The value is configurable in any mode.

Copyright © Huawei Technologies Co., Ltd.

Item	Description
(V/cell)	
Cell equalized volt. (V/cell)	The battery equalized voltage value can be 2.30–2.40 V/cell, and is 2.35 V/cell by default. The value is configurable in any mode.

Figure 4-44 Battery Param. screen 2

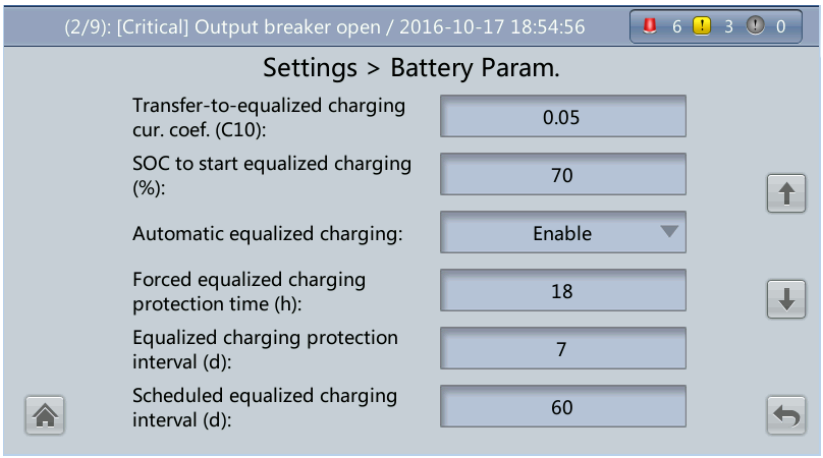

Item	Description
Transfer-to-equalized charging cur. coef. (C10)	The battery enters equalized charge state when the battery current exceeds this parameter value. The value range is 0.02–0.08, and is 0.05 by default.
SOC to start equalized charging (%)	When the SOC is lower than the specified value, batteries enter the equalized charging mode.
Automatic equalized charging	When the value is **Enable**, the UPS automatically changes the battery management status to equalized charging based on the charge current and float charge time.
Forced equalized charging protection time (h)	Enable forced equalized charging when batteries are continuously under float charging or hibernation. When the forced equalized charging time reaches the value of this parameter, float charging starts.
Equalized charging protection interval (d) and **Scheduled equalized charging interval (d)**	After batteries transfer from equalized charging to float charging, if the batteries do not discharge, equalized charging starts only after the float charging time reaches **Equalized charging protection interval**. After equalized charging is complete, scheduled equalized charging starts when the non-equalized charging time exceeds **Scheduled equalized charging interval**.

Copyright © Huawei Technologies Co., Ltd.

Figure 4-45 Battery Param. screen 3

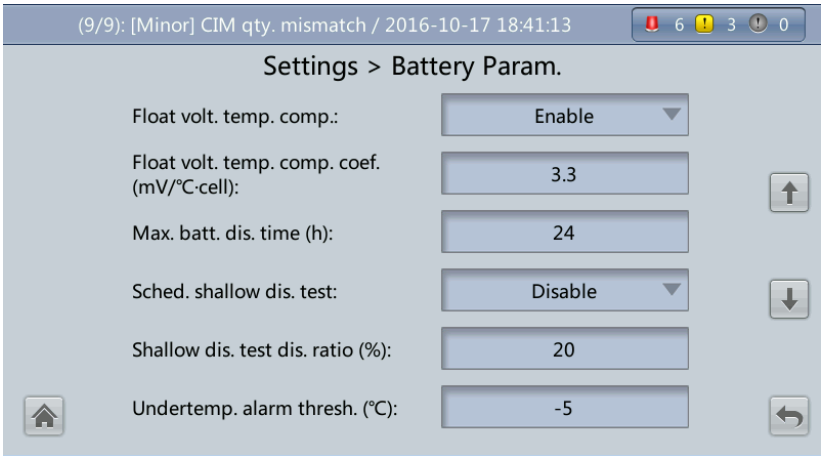

Item	Description
Float volt. temp. comp.	Enable this feature to correct the float voltage based on the battery temperature when a battery temperature sensor is connected. The value is configurable in any mode.
Float volt. temp. comp. coef. (mV/℃·cell)	Correction coefficient during float voltage temperature compensation.
Max. batt. dis. time (h)	Set the maximum battery discharge time. When the discharge time reaches this value, the UPS powers off. The battery discharge time can be set only to 0 hours or a value only in the range of 16–48 hours. If the time is set to 0 hours, battery discharge protection is not implemented. The default value is 24 hours.
Sched. shallow dis. test	When certain conditions are met, the charger shuts down, and batteries supply power to loads. The system records the battery discharge data as the reference for battery capacity and lifespan.
Shallow dis. test dis. ratio (%)	Set the proportion of the discharge capacity to the total discharge capacity. The value can be 10%–50%, and is 20% by default. The value is configurable in any mode.
Undertemp. alarm thresh. (℃) and **Overtemp. alarm thresh. (℃)**	Battery temperatures can be monitored in a timely manner. If a battery overtemperature alarm is detected, the charging current limit decreases to 0.03 CA. Battery charging stops if a battery overtemperature protection alarm (when the temperature reaches the high temperature threshold plus 3 ℃) is generated. The **Undertemp. alarm thresh.** can be set from –20 ℃ to +5 ℃ and the default value is –5 ℃. The **Overtemp. alarm thresh.** can be set from 35 ℃ to 55 ℃ and the default value is 50 ℃.

Copyright © Huawei Technologies Co., Ltd.

Figure 4-46 Battery Param. screen 4

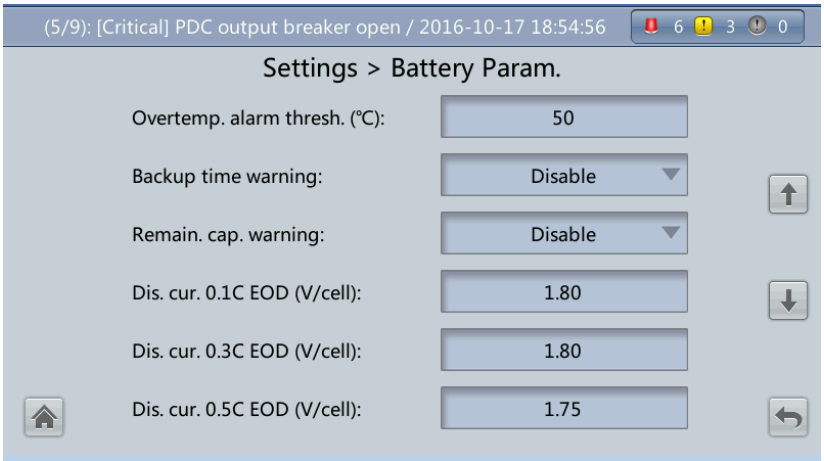

Item	Description
Backup time warning	An alarm is generated if this parameter is set to **Enable** and the backup time is lower than the warning threshold.
Remain. cap. warning	An alarm is generated if this parameter is set to **Enable** and the remaining capacity is lower than the warning threshold.
Dis. cur. 0.1C EOD (V/cell), **Dis. cur. 0.3C EOD (V/cell)**, **Dis. cur. 0.5C EOD (V/cell)**, and **Dis. cur. 1.0C EOD (V/cell)**	By default, **0.1C EOD (V/cell)** is set to **1.80**, **0.3C EOD (V/cell)** to **1.75**, **0.5C EOD (V/cell)** to **1.67**, and **1.0C EOD (V/cell)** to **1.60**. These values are calculated in real time based on the discharge currents.

Figure 4-47 Battery Param. screen 5

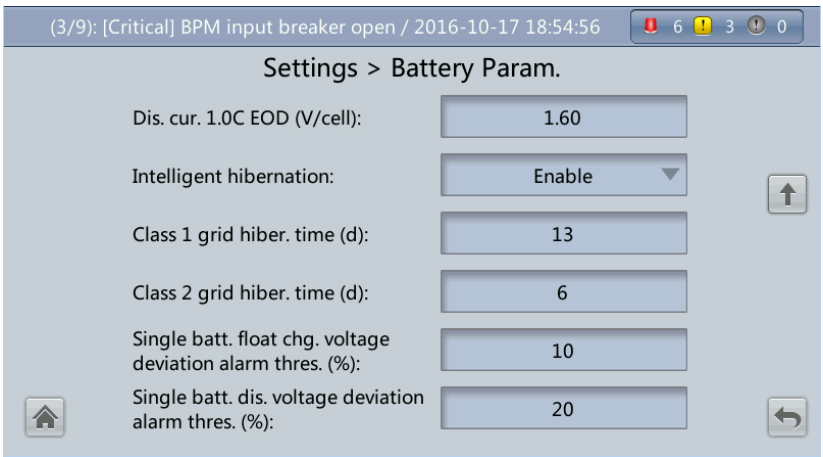

Copyright © Huawei Technologies Co., Ltd.

Item	Description
Intelligent hibernation	If this parameter is set to **Enable**, the intelligent battery hibernation function is enabled.
Class 1 grid hiber. time (d) and **Class 2 grid hiber. time (d)**	Set the hibernation time based on the power grid type. In hibernation mode, batteries are not charged or discharged, which extends the battery lifespan. • The **Class 1 grid hiber. time** value range is 0–30 days, and the default value is 13 days. The value 0 indicates no hibernation. • The **Class 2 grid hiber. time** value range is 0–15 days, and the default value is 6 days. The value 0 indicates no hibernation.
Single batt. float chg. voltage deviation alarm thres. (%) and **Single batt. dis. voltage deviation alarm thres. (%)**	**Single batt. float chg. voltage deviation alarm thres. (%)** and **Single batt. dis. voltage deviation alarm thres. (%)** are used to check whether the cells in each battery string have the same charge voltage and discharge voltage. When a value exceeds the specified range, an alarm is generated. The calculation formula is (Charge/Discharge voltage – Average voltage)/Average voltage x 100%.

Dry Contact Settings

NOTICE

- Set only the dry contacts that are needed. Otherwise, the UPS may not run properly.
- When a dry contact card is disabled, its dry contact signals are disabled.
- After a dry contact card is enabled, its dry contact signals can be displayed on the LCD.
- Disable all the dry contacts for a dry contact card that is not connected and all the dry contacts that are not used to prevent false alarms.
- ( ) encloses a unit, and [ ] encloses silk screen.

Specify dry contact settings on the following cards:

- Dry contact card (MUE05A): provides dry contact signals for the battery grounding failure detector, D.G., BCB box, and PDCs.
- Backfeed protection board (MUE06A): provides backfeed protection signals. This board can be enabled or disabled.
- Monitoring interface card (MUS05A): provides four routes of configurable output dry contact signals.
- Dry contact extended card (MUE07A): provides two routes of input signals and one route of output signals.

Set the dry contact parameters, as shown in Figure 4-48 to Figure 4-54.

Copyright © Huawei Technologies Co., Ltd.

Figure 4-48 Dry Contacts screen 1

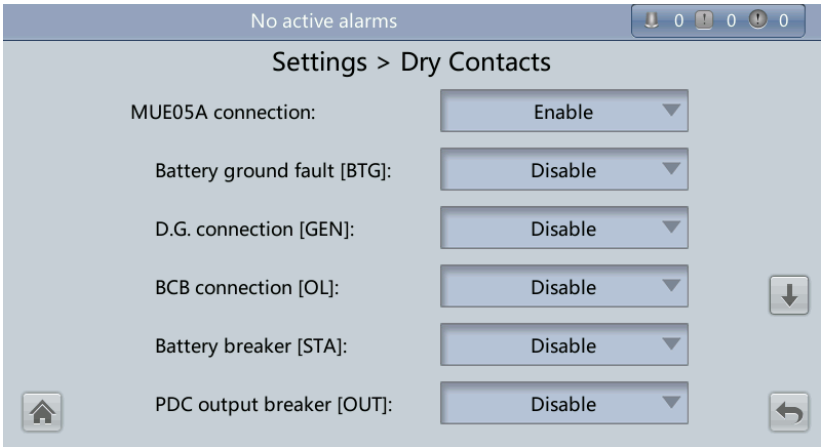

Item	Description
MUE05A connection	MUE05A connection status. Independent input signals can be enabled only when this parameter is set to **Enable**.
Batter ground fault [BTG]	Enable or disable the battery grounding failure detection.
D.G. connection [GEN]	Enable or disable D.G. connection detection.
BCB connection [OL]	Enable or disable BCB connection detection.
Batter breaker [STA]	Enable or disable battery circuit breaker monitoring.
PDC output breaker [OUT]	Enable or disable PDC output circuit breaker monitoring.

Copyright © Huawei Technologies Co., Ltd.

Figure 4-49 Dry Contacts screen 2

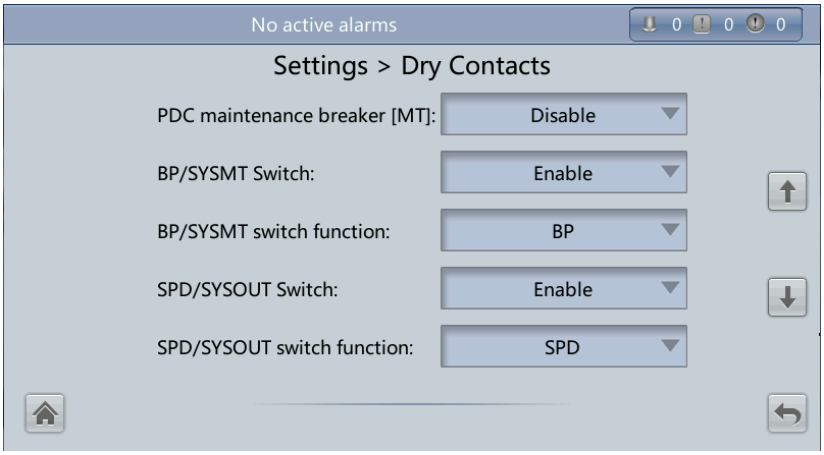

Item	Description
PDC maintenance breaker [MT]	Enable or disable PDC maintenance circuit breaker monitoring.
BP/SYSMT Switch	If the BP/SYSMT switch is set to **Enable**, the port has dry contact signal access. Using the port depends on the status of the BP/SYSMT switch.
BP/SYSMT switch function	If the BP/SYSMT switch is set to **Enable**, this parameter is displayed on the screen. Set this parameter to determine whether the port is used to detect the status of the PDU bypass input switch, or system maintenance switch.
SPD/SYSOUT Switch	If the SPD/SYSOUT switch is set to **Enable**, the port has dry contact signal access. How a user uses the port depends on the status of the SPD/SYSOUT switch.
SPD/SYSOUT switch function	If the SPD/SYSOUT switch is set to **Enable**, this parameter is displayed on the screen. Set this parameter to determine whether the port is used to detect the status of the PDU input surge protector, or system output switch.

Copyright © Huawei Technologies Co., Ltd.

Figure 4-50 Dry Contacts screen 3

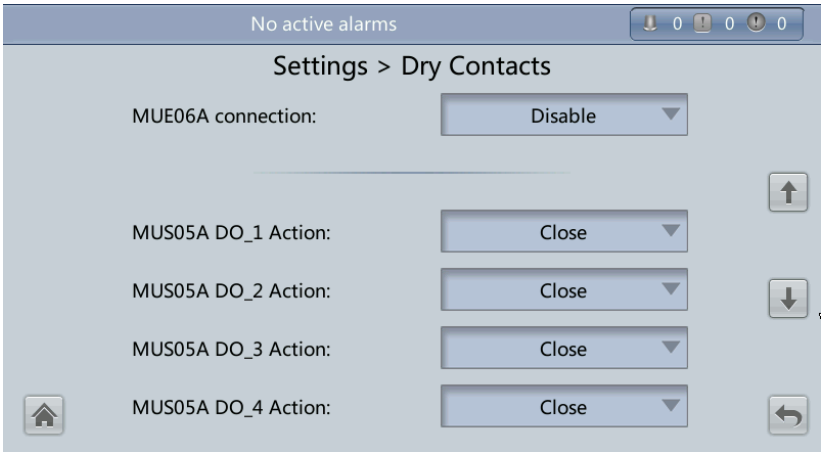

Item	Description
MUE06A connection	If this parameter is enabled, the mains and bypass backfeed protection is enabled.
MUS05A DO_1 Action	Control the status of the DO_1 dry contact on the MUS05A dry contact card.
MUS05A DO_2 Action	Control the status of the DO_2 dry contact on the MUS05A dry contact card.
MUS05A DO_3 Action	Control the status of the DO_3 dry contact on the MUS05A dry contact card.
MUS05A DO_4 Action	Control the status of the DO_4 dry contact on the MUS05A dry contact card.

Figure 4-51 Dry Contacts screen 4

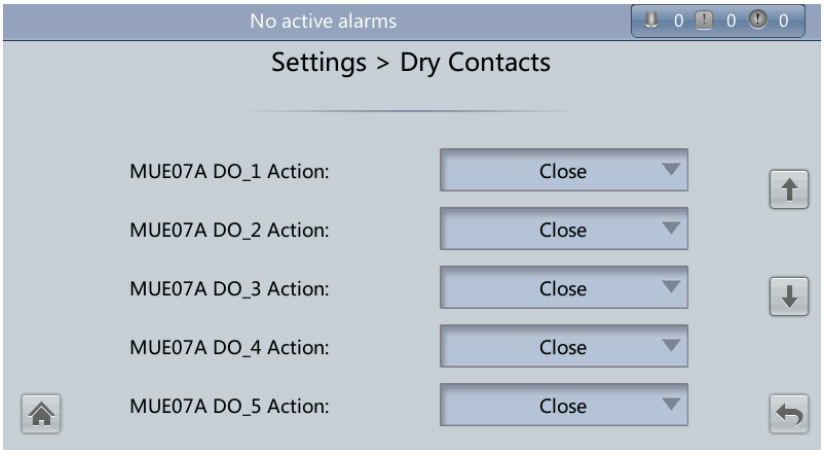

Copyright © Huawei Technologies Co., Ltd.

Item	Description
MUE07A DO_1 Action	Control the status of the DO_1 dry contact on the MUE07 extended dry contact card.
MUE07A DO_2 Action	Control the status of the DO_2 dry contact on the MUE07 extended dry contact card.
MUE07A DO_3 Action	Control the status of the DO_3 dry contact on the MUE07 extended dry contact card.
MUE07A DO_4 Action	Control the status of the DO_4 dry contact on the MUE07 extended dry contact card.
MUE07A DO_5 Action	Control the status of the DO_5 dry contact on the MUE07 extended dry contact card.

Figure 4-52 Dry Contacts screen 5

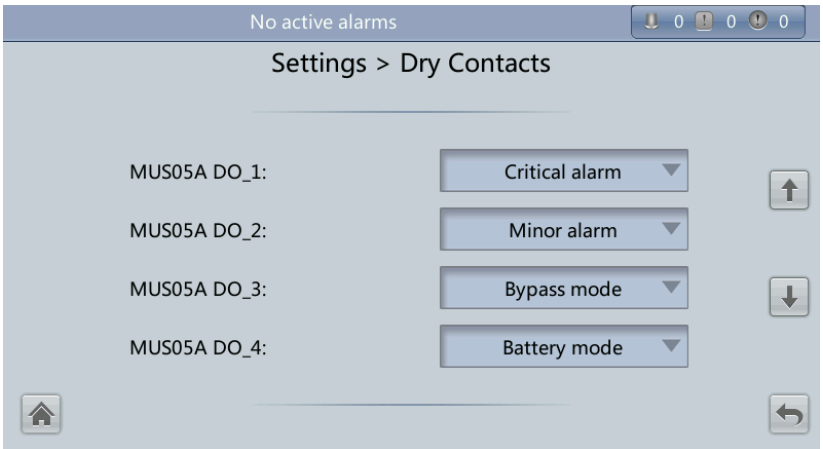

Item	Description
MUS05A DO_1	Corresponds to signal of the output dry contact DO_1 on the MUS05A.
MUS05A DO_2	Corresponds to signal of the output dry contact DO_2 on the MUS05A.
MUS05A DO_3	Corresponds to signal of the output dry contact DO_3 on the MUS05A.
MUS05A DO_4	Corresponds to signal of the output dry contact DO_4 on the MUS05A.

Copyright © Huawei Technologies Co., Ltd.

Figure 4-53 Dry Contacts screen 6

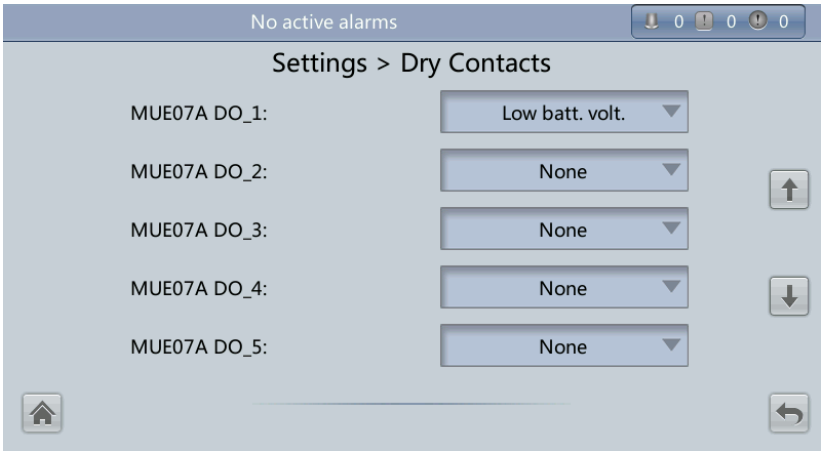

Item	Description
MUE07A DO_1	Corresponds to signal of the output dry contact DO_1 on the MUE07A.
MUE07A DO_2	Corresponds to signal of the output dry contact DO_2 on the MUE07A.
MUE07A DO_3	Corresponds to signal of the output dry contact DO_3 on the MUE07A.
MUE07A DO_4	Corresponds to signal of the output dry contact DO_4 on the MUE07A.
MUE07A DO_5	Corresponds to signal of the output dry contact DO_5 on the MUE07A.

Figure 4-54 Dry Contacts screen 7

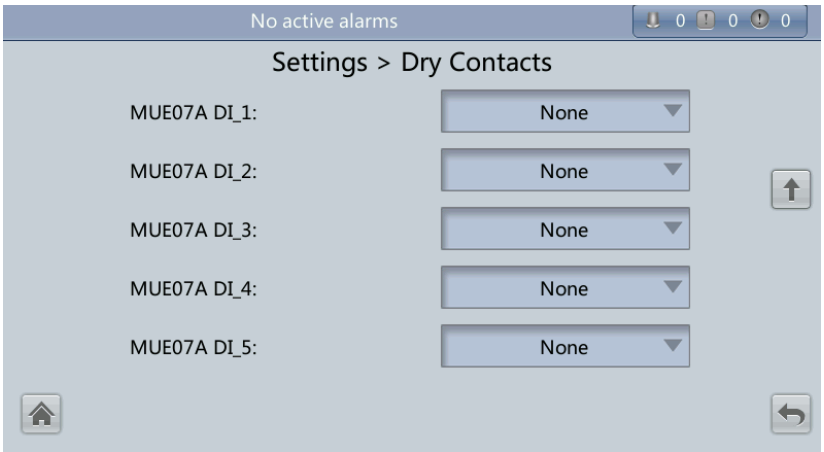

Copyright © Huawei Technologies Co., Ltd.

Item	Description
MUE07A DI_1	Corresponds to signal of the input dry contact DI_1 on the MUE07A.
MUE07A DI_2	Corresponds to signal of the input dry contact DI_2 on the MUE07A.
MUE07A DI_3	Corresponds to signal of the input dry contact DI_3 on the MUE07A.
MUE07A DI_4	Corresponds to signal of the input dry contact DI_4 on the MUE07A.
MUE07A DI_5	Corresponds to signal of the input dry contact DI_5 on the MUE07A.

CIM Parameters

NOTICE

If iBAT is configured, set the parameters in this section by referring to the document delivered with the iBAT.

Figure 4-55 shows the **CIM Param.** screen.

Figure 4-55 CIM parameters

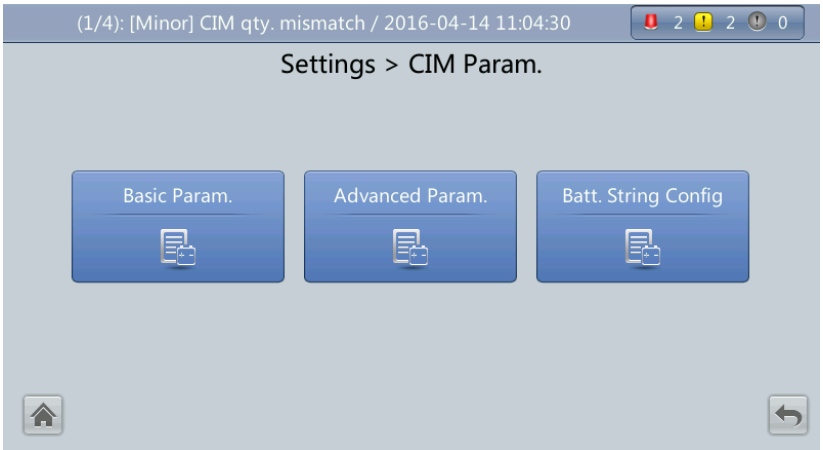

NOTE

On the **System Info** > **Settings** > **CIM Param.** > **Basic Param.** screen, if **Number of battery strings** is 0, the **Batt. String Config** is not displayed on the **CIM Param.** screen.

- Figure 4-56 and Figure 4-57 show the **Basic Param.** screen.

Copyright © Huawei Technologies Co., Ltd.

Figure 4-56 Basic Parameters 1

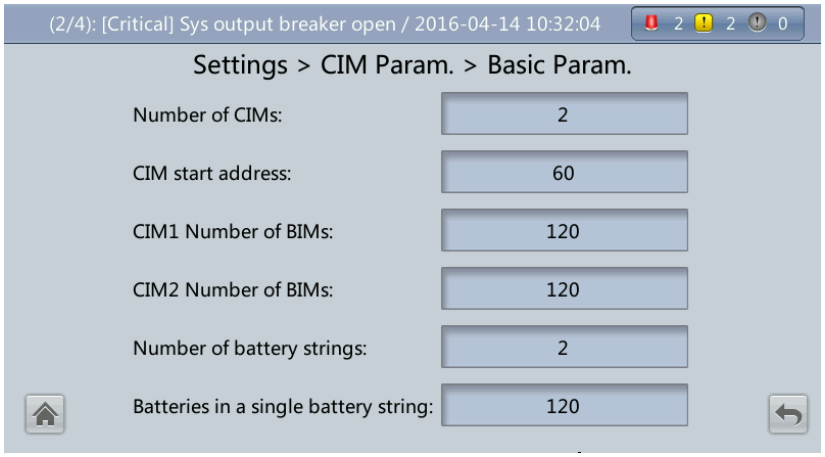

Figure 4-57 Basic Parameters 2

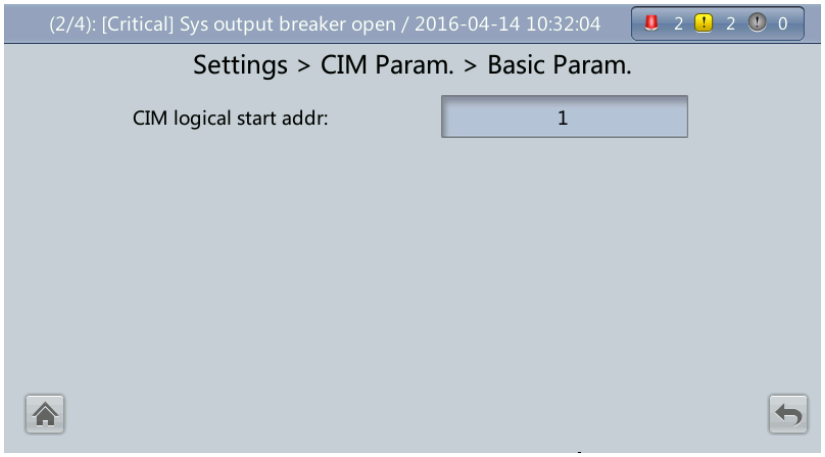

Item	Description
Number of CIMs	A maximum of four CIMs can be connected.
CIM start address	The CIM start address cannot be changed. The DIP switch should be set to 0000 for the first CIM, and the DIP switch setting for a later connected CIM should increase by 1 (binary) than that set for the previous CIM.
CIM Number of BIMs	Number of BIMs managed by the CIM.
Number of battery strings	Number of battery strings connected in parallel.
Batteries in a single battery	Number of batteries in a battery string.

Copyright © Huawei Technologies Co., Ltd.

Item	Description
string	
CIM logical start addr	Communication address when the northbound device queries CIM data.

- Figure 4-58 shows the **Advanced Param.** screen.

Figure 4-58 Advanced Parameters

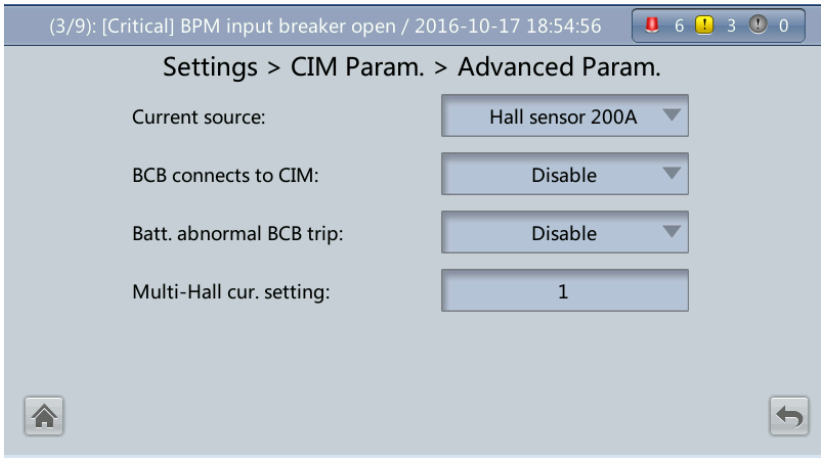

Item	Description
Current source	Specifications of the Hall effect sensor.
BCB connects to CIM	Determine whether the BCB connects to the CIM.
Batt. abnormal BCB trip	Determine whether BCB trips when batteries are not functioning properly.
Multi-Hall cur. setting	The value of **Multi-Hall cur. setting** equals the number of positive or negative Hall effect sensors in a single battery string and should be greater than or equal to 1.

- Figure 4-59 shows the battery string config screen. On this screen, the CIM No. and BIM No. can be set under each battery string.

Copyright © Huawei Technologies Co., Ltd.

Figure 4-59 Batt. String Config 1

Figure 4-60 shows the configuration of CIM and BIM for each battery string.

Figure 4-60 Batt. String Config 2

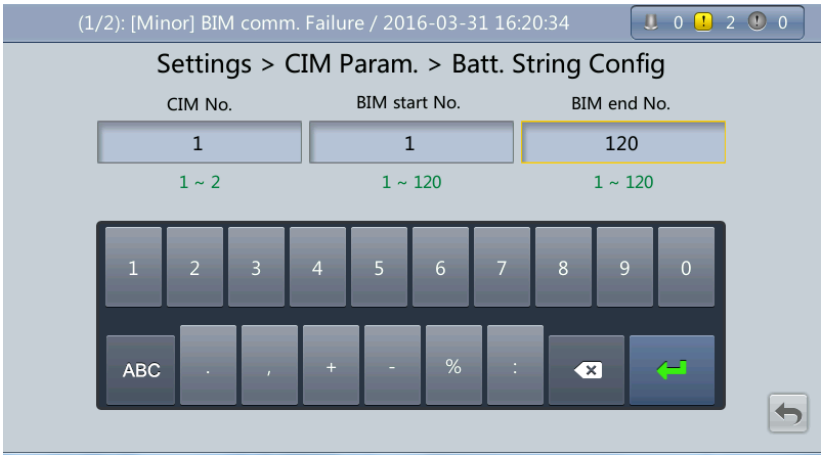

4.1.3.5 Maintenance Screen

On the **System Info** screen, tap to display the **Maintenance** screen, as shown in Figure 4-61 and Figure 4-62. The **Maintenance** screen provides buttons such as **Battery Maint.**, **USB Operations**, **Inv. ON**, and **Inv. OFF**.

NOTE

If a user is not currently logged in, a dialog box will display for entering a user name and password.

Copyright © Huawei Technologies Co., Ltd.

Figure 4-61 Maintenance screen 1

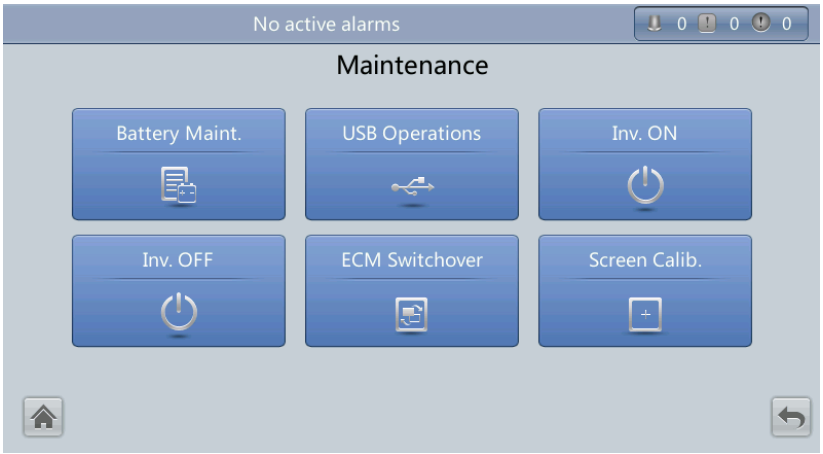

Figure 4-62 Maintenance screen 2

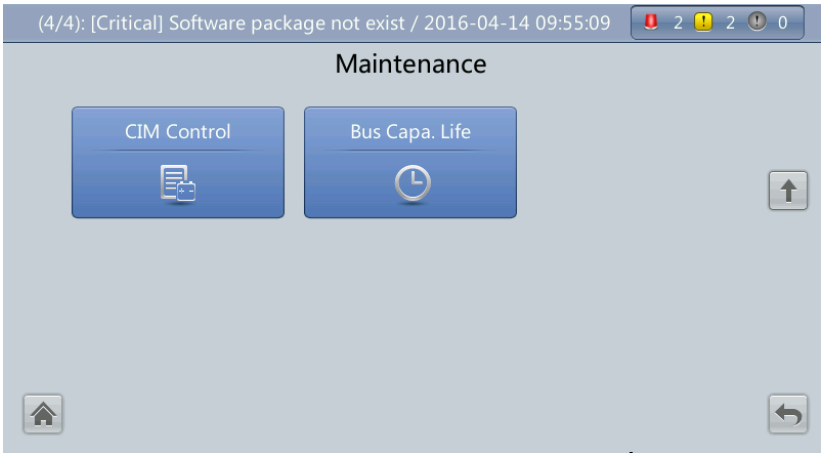

NOTE

On the **System Info** > **Settings** > **Advanced Param.** screen, when **Bus Capa. Life** is set to **Enable**, the **Bus Capa. Life** is displayed on the **Maintenance** screen.

Battery Maint. screen

Copyright © Huawei Technologies Co., Ltd.

NOTICE

- Perform battery maintenance when no alarm is active on the UPS. Otherwise, the UPS may supply no power.
- A proportion of battery capacity will discharge during battery maintenance. This reduces the discharge time before the next charge.
- Do not perform battery maintenance when a D.G. is connected.

Perform battery maintenance periodically to increase the battery lifespan and improve the UPS reliability. Battery maintenance includes **Forced Equalized Charging**, **Shallow Dis. Test**, and **Capacity Test**. The next maintenance time displayed on the screen indicates the upcoming time in which to check batteries. Figure 4-63 shows the **Battery Maint.** screen.

Figure 4-63 Battery Maint. screen

Item	Description
Forced Equalized Charging	Forcibly perform equalized charging on batteries.
Shallow Dis. Test	Test the partial discharge capacities of batteries.
Capacity Test	Test the full discharge capacities of batteries.

USB Operations

The **USB Operations** screen provides **Remove USB**, **Upgrade Software**, **Load Config.**, **Export Config.**, **Export Logs**, **Export Alarms**, and other functions for upgrading software and downloading system data, as shown in Figure 4-64 and Figure 4-65.

Copyright © Huawei Technologies Co., Ltd.

Figure 4-64 USB Operations screen 1

Figure 4-65 USB Operations screen 2

Inv. ON and Inv. OFF Menus

Use the LCD to start and shut down the inverter. Before the inverter starts, the system asks for confirmation to prevent misoperations. Figure 4-66 shows the **Inv. ON** screen, and Figure 4-67 shows the **Inv. OFF** screen.

Copyright © Huawei Technologies Co., Ltd.

Figure 4-66 Inv. ON screen

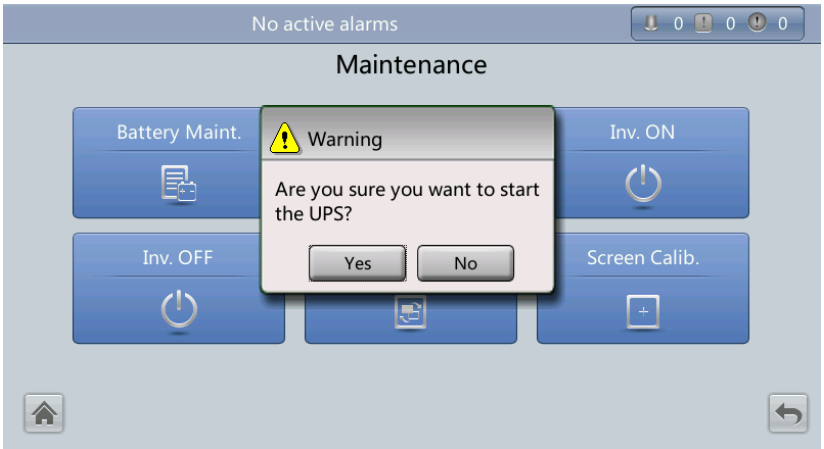

Figure 4-67 Inv. OFF screen

Item	Description
Inv. ON	The **Inv. ON** screen allows you to start the inverter manually.
Inv. OFF	The **Inv. OFF** screen allows you to shut down the inverter manually.

ECM Switchover

Copyright © Huawei Technologies Co., Ltd.

NOTICE

- Only professional personnel are allowed to use this function.
- Clear faults before performing ECM active/standby switchover. For details about how to clear faults, see Clear Faults in section 4.1.3.3 Alarms Screen.
- After an ECM is inserted, active and standby switchover is supported only after the ECM is configured and starts working properly (about 30 seconds).

When an ECM needs to be maintained, perform active/standby switchover on the ECM, as shown in Figure 4-68 (a dialog box will display asking for confirmation to prevent misoperations). After switchover, ensure that the ECM has stopped working (the yellow or red indicator is on, or the green indicator is blinking) before maintaining it.

Figure 4-68 ECM switchover

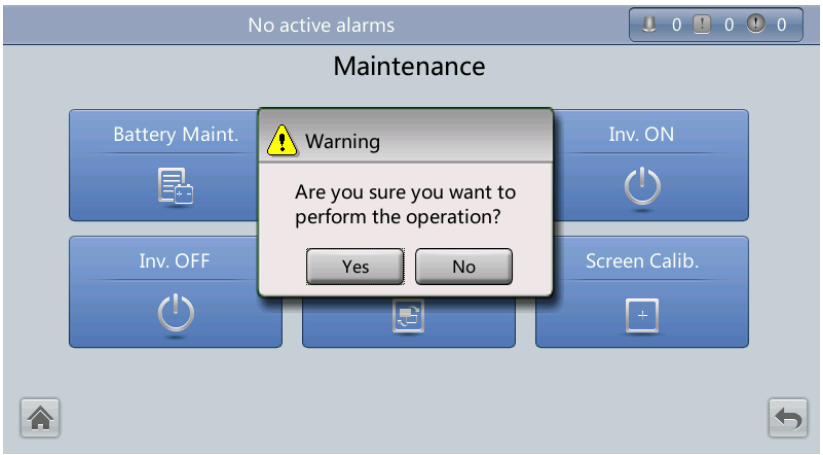

Screen Calib. Menu

Calibrate the screen, as shown in Figure 4-69.

Figure 4-69 Screen Calib. screen

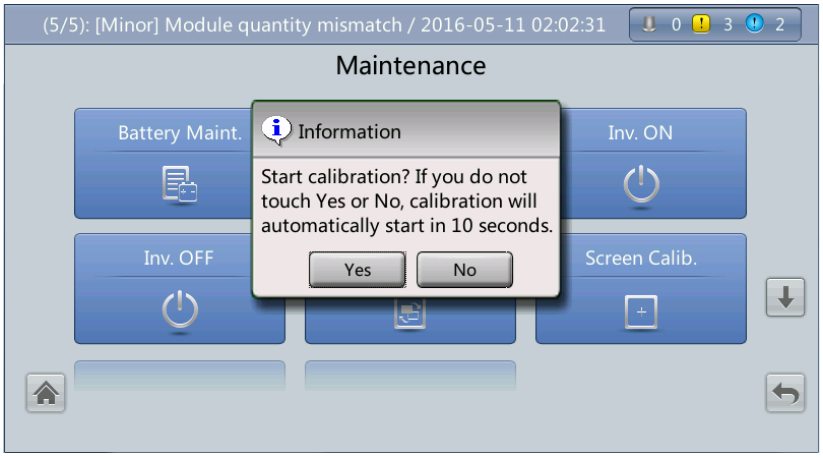

Copyright © Huawei Technologies Co., Ltd.

CIM Control

Reset the specified CIM and BIM, and sets the BIM blinking function or measures the BIM internal resistance.

Figure 4-70 CIM control

Item	Description
Reset	Restart a BIM or a CIM.
Blink	Make the red indicator on the BIM start or stop blinking super fast.
Internal resistance	Measure the battery internal resistance. If the condition for measuring internal resistance is met (batteries are fully charged), you can tap **Measure** to start measuring the internal resistance of the selected BIM in a CIM. **NOTE** The interval between two measurement operations must be greater than 10 minutes.

Bus Capa. Life

If the service life of a capacitor is about to end, that is, **Module X bus capacitor life (y)** is less than 1.0, contact Huawei technical support to replace the power module.

Copyright © Huawei Technologies Co., Ltd.

Figure 4-71 Bus capacitor life forecast

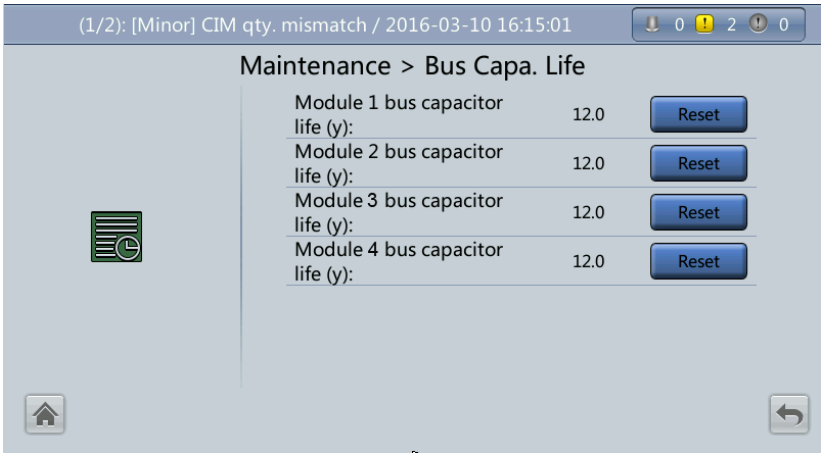

4.1.3.6 About Screen

On the **System Info** screen, tap **About** to view the UPS model, manufacturer name, monitoring version and power version, as shown in Figure 4-72. To view version details, tap **Version Info**.

Figure 4-72 About screen

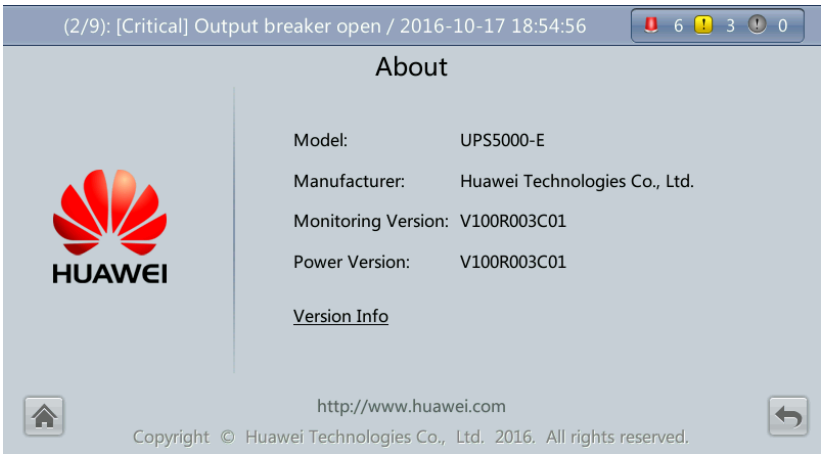

4.1.4 System Status Screen

On the main screen, tap **System Status**. On the **System Status** to view the mains input, bypass input, load, and battery information, as shown in Figure 4-73.

Copyright © Huawei Technologies Co., Ltd.

Figure 4-73 System Status screen

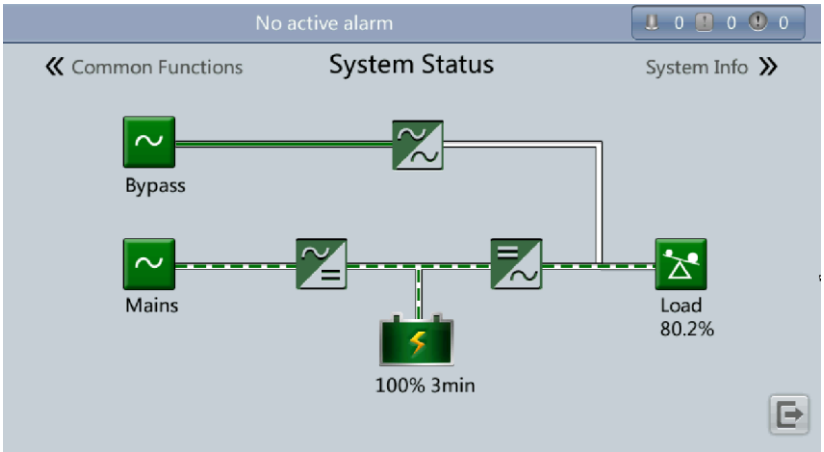

4.1.5 Common Functions Screen

On the main screen, tap **Common Functions**. On the **Common Functions** to query the AC output, load, and mains input information, start or shut down the inverter, start or shut down the inverter, control the buzzer, and query the historical alarms, as shown in Figure 4-74 and Figure 4-75.

Figure 4-74 Common Functions screen 1

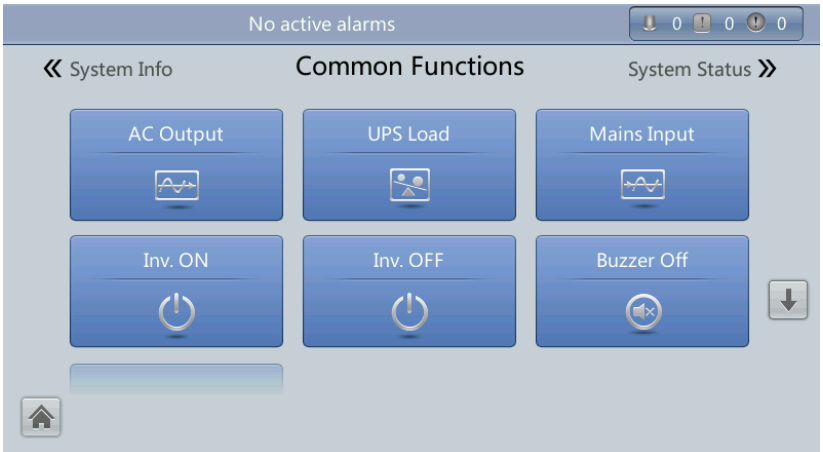

Copyright © Huawei Technologies Co., Ltd.

Figure 4-75 Common Functions screen 2

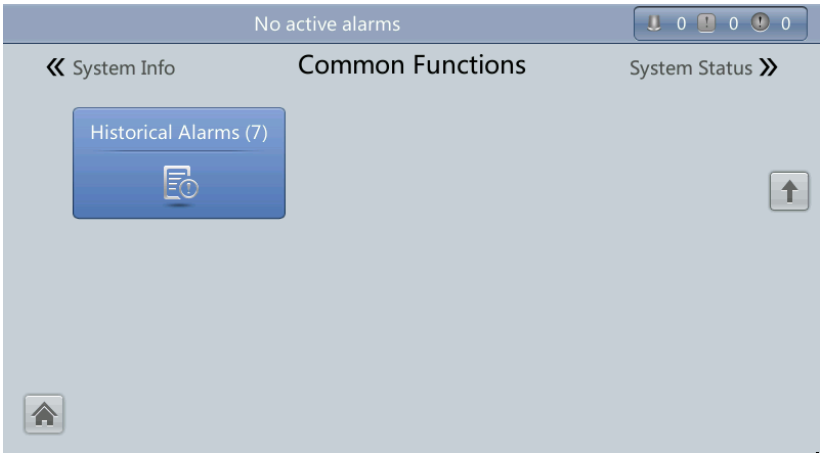

4.2 WebUI

4.2.1 Login

Context

Internet Explorer 11 is used as the example browser.

Procedure

Step 1 Open the browser and choose **Tools** > **Internet Options**.

Step 2 On the **Advanced** tab page, ensure that **Use TLS 1.0**, and **Use TLS 1.1** are selected and click **OK**, as shown in Figure 4-76.

Copyright © Huawei Technologies Co., Ltd.

Figure 4-76 Settings in the Internet Options dialog box

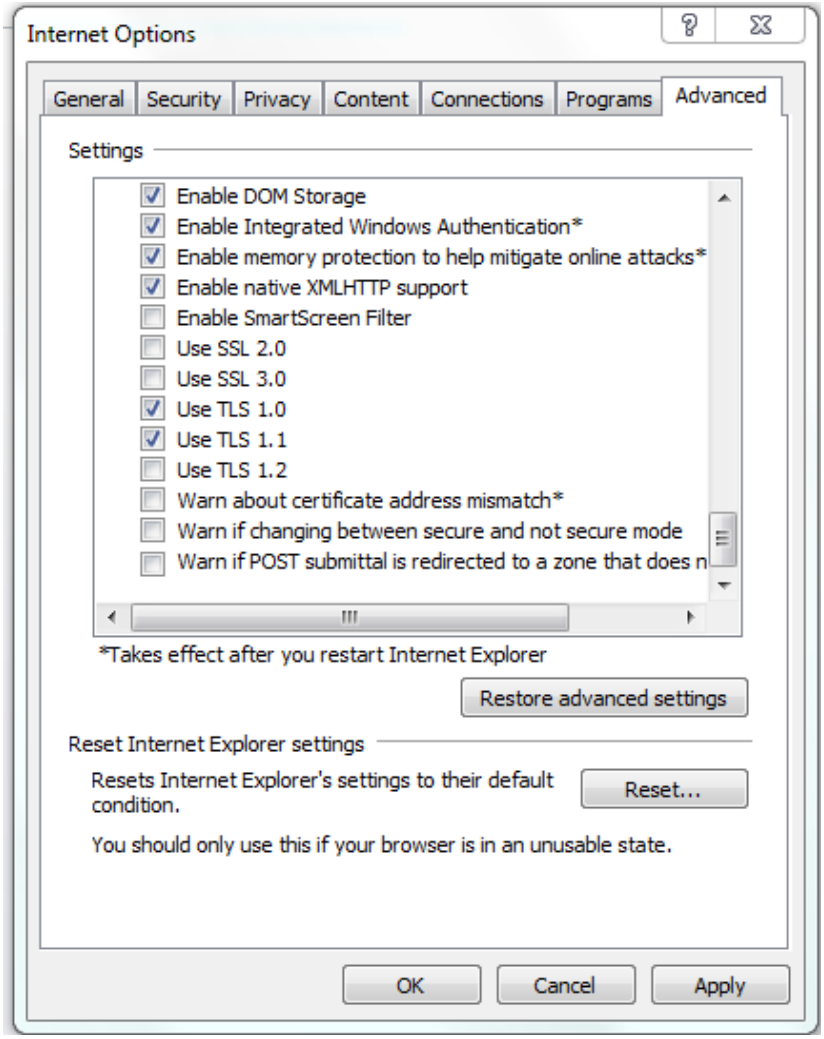

Step 3 Enter **https://*UPS IP address*** in the address box of the browser, select a language, set **User name** and **Password**, and click **Login**. The system supports Internet Explorer 11 and Firefox 31.0. Table 4-5 describes the system users.

NOTE

The preset UPS IP address is 192.168.0.10. You can set the UPS Ethernet IP address on the LCD or WebUI. The value range is 1.0.0.0–223.255.255.255.

Table 4-5 User description

Default User	Preset Password		User Rights
admin (system administrator)	LCD	000001	Performs all operations on the LCD and WebUI, including system running information browsing, system information (historical alarms, logs, e-labels, and fault data) exporting, parameter (system parameters and battery parameters) setting, system control (startup, shutdown, troubleshooting, runtime clearing, and battery management), system
	WEB	Changeme	

Copyright © Huawei Technologies Co., Ltd.

Default User	Preset Password		User Rights
			configuration (network parameters, user management, time and date, and site information), and system maintenance (upgrade, calibration, and variables commissioning).
operator (common user)	LCD	000001	Only browses the system running information, exports system information (historical alarms, logs, e-labels, and fault data), starts/shuts down the inverter, rectifies faults, and controls the buzzer. Other control and maintenance functions that may affect system operation are invisible and parameters cannot be set.
	WEB	Changeme	
browser (browsing user)	WEB	N/A	Only browses the system running information.

NOTE

- If an incorrect password is entered three consecutive times, the account will be logged out for 5 minutes.
- After a user logs in to the WebUI, if another user logs in with the same user name, the current account will be logged out.
- It is advised to change the password after the first login using **User Mgmt.** on the **Config.** page to prevent unauthorized access.

----End

4.2.2 Monitoring Page

After a user logs in to the WebUI, the **Monitoring** page is displayed by default. Figure 4-77 numerically labels **Monitoring** page details and Table 4-6 describes these details.

Copyright © Huawei Technologies Co., Ltd.

Figure 4-77 Monitoring page

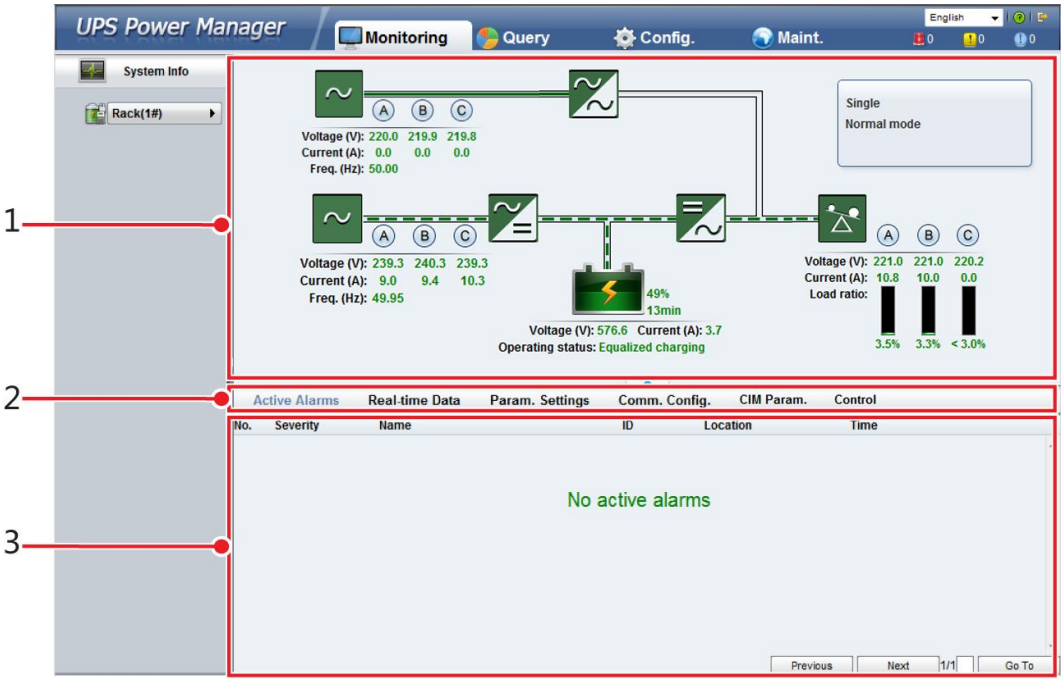

NOTE

If **NA** is displayed for load ratio, the value is invalid or outside the range.

Table 4-6 Monitoring page details

Number	Area	Function
1	Running status area	Displays the power flow and UPS running information.
2	Menu bar	Displays alarms and real-time data, sets parameters, and provides control commands. The **Active Alarms** page is displayed by default.
3	Information area	Displays system monitoring information.

4.2.2.1 Active Alarms Page

The **Active Alarms** page details active alarms, as shown in Figure 4-78.

Copyright © Huawei Technologies Co., Ltd.

Figure 4-78 Active Alarms page

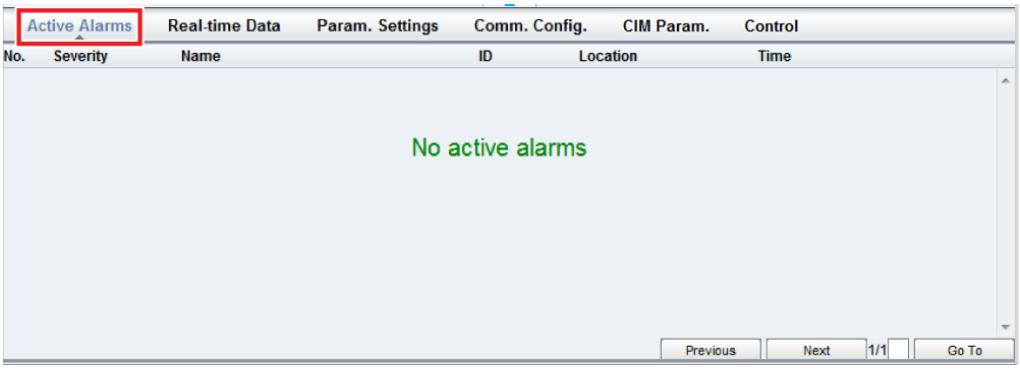

4.2.2.2 Real-time Data Page

The **Real-time Data** page details real-time system running data, as shown in Figure 4-79.

Figure 4-79 Real-time Data page

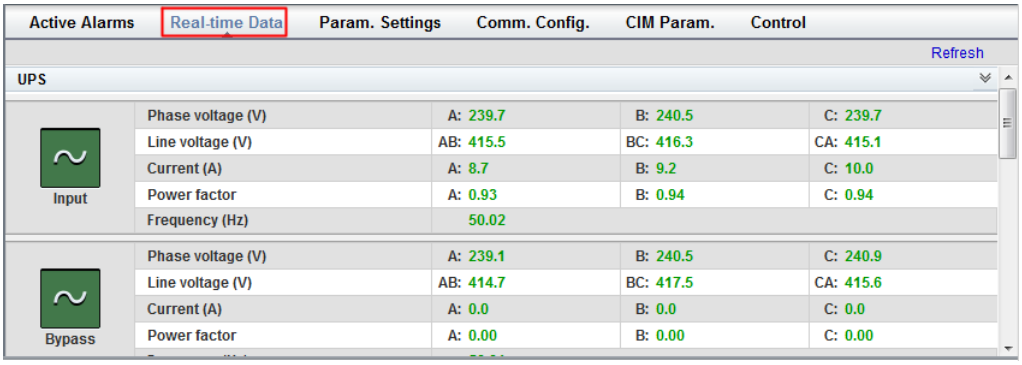

4.2.2.3 Param. Settings Page

Set basic parameters, advanced parameters, input parameters, output parameters, bypass parameters, battery parameters, and dry contacts on the **Param. Settings** page, as shown in Figure 4-80. The setting method is the same as that on the LCD. For details, see 4.1.3.4 Settings Screen.

Copyright © Huawei Technologies Co., Ltd.

Figure 4-80 Param. Settings page

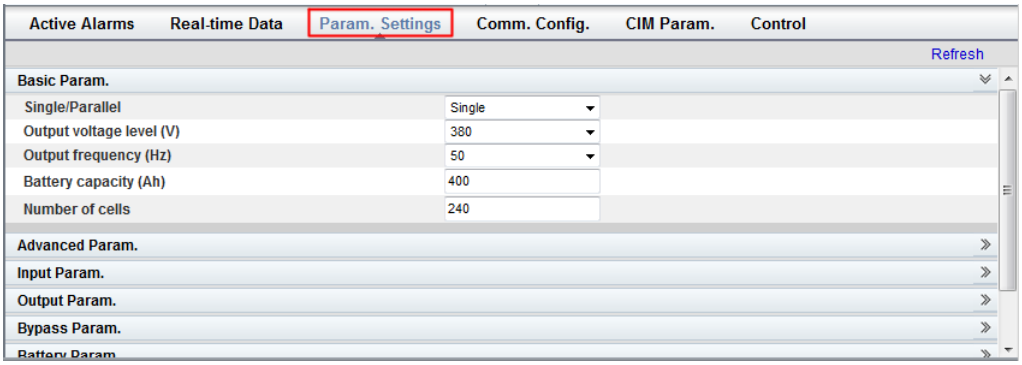

4.2.2.4 Comm. Config. Page

Open the **Comm. Config.** page to set communications information. The settings are the same as those on the LCD in 4.1.3.4 Settings Screen. See Figure 4-81.

Figure 4-81 Comm. Config. page

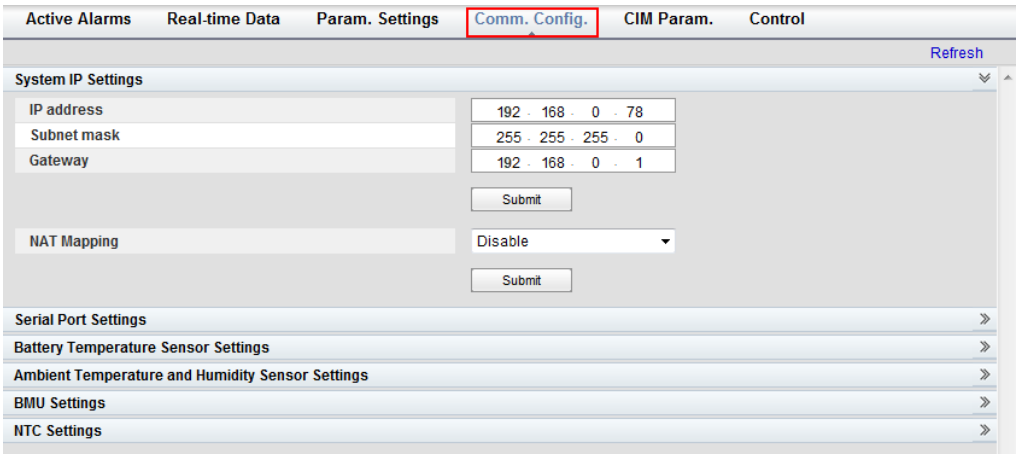

4.2.2.5 CIM Parameters

Open the **CIM Param.** Screen to set basic parameters, advanced parameters, and battery string configurations, as shown in Figure 4-82.

Copyright © Huawei Technologies Co., Ltd.

Figure 4-82 CIM parameters

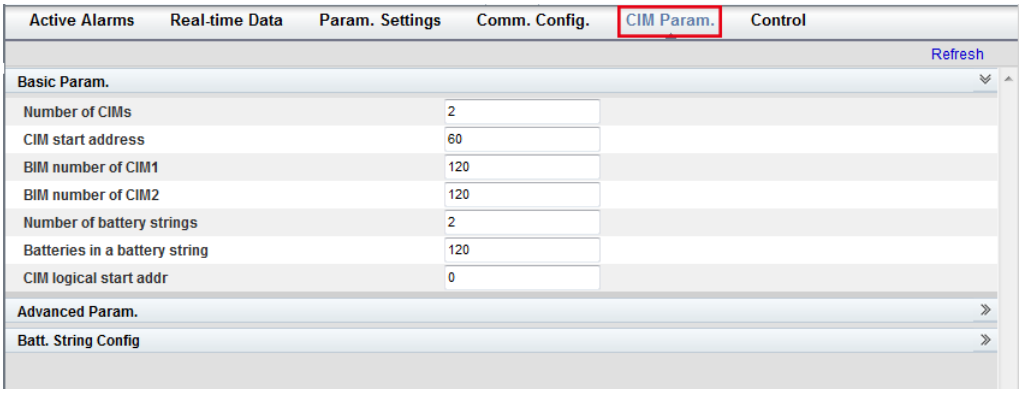

4.2.2.6 Control Page

Open the **Control** page to control the system running and CIM, as shown in Figure 4-83.

Figure 4-83 Control page

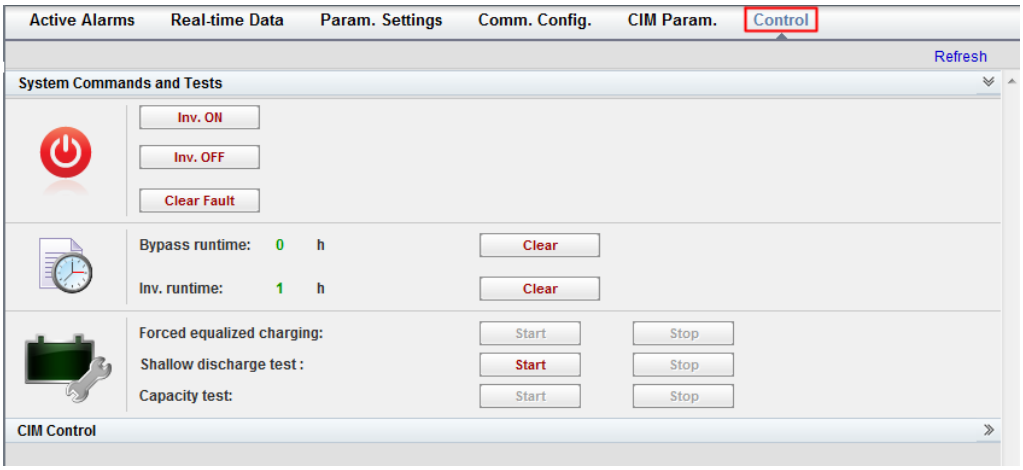

4.2.3 Query Page

4.2.3.1 Historical Alarms Page

On the homepage, click the **Query** tab to open the **Historical Alarms** page for querying historical alarms based on severity, generation time, and clear time, as shown in Figure 4-84.

Copyright © Huawei Technologies Co., Ltd.

Figure 4-84 Historical Alarms page

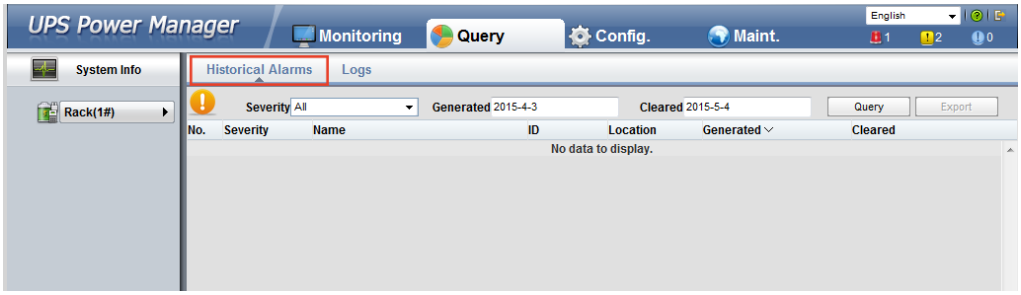

4.2.3.2 Logs Page

On the **Logs** page, you can set **Log** to **Historical logs**, **Cap. test logs**, or **Common test logs**, and query or export logs, as shown in Figure 4-85.

NOTE

Historical logs can be exported but not queried.

Figure 4-85 Logs page

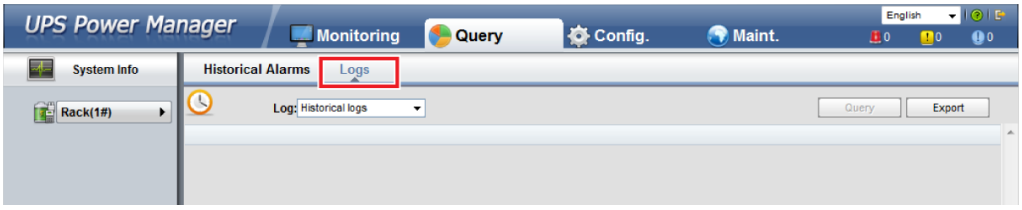

4.2.4 Config. Page

4.2.4.1 User Management

On the home page, choose **Config.** > **User Mgmt**.

Copyright © Huawei Technologies Co., Ltd.

Figure 4-86 User Mgmt. page

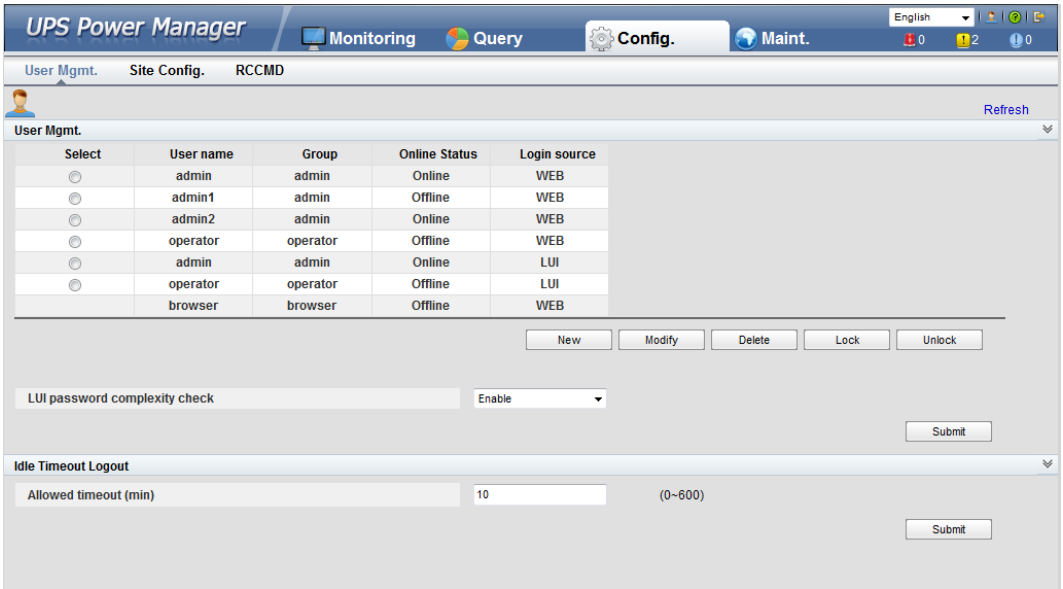

NOTE

- On the **User Mgmt.** page, you can add, modify, delete, lock, or unlock users and change user passwords.
- The WebUIuser name cannot exceed 10 characters and can contain only uppercase and lowercase letters, digits, and underscores. The password contains 6 to 20 characters and at least two types of uppercase letters, lowercase letters, digits, and underscores.
- If the LUI password complexity check is disabled, the user password is required to be a string of six to eight digits. If the password complexity check is enabled, the user password is required to be a string of 6–20 characters and contain at least two types of characters.

4.2.4.2 Site Config. Page

On the home page, choose **Config.** > **Site Config**.

Copyright © Huawei Technologies Co., Ltd.

Figure 4-87 Site Config. page

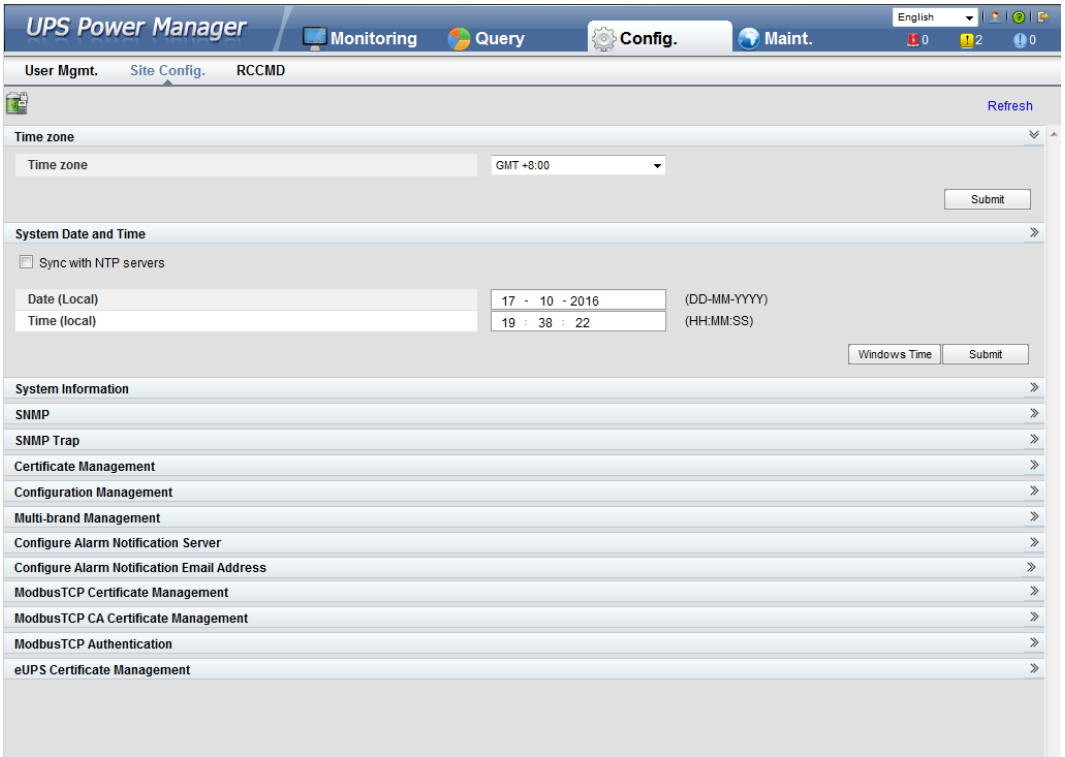

NOTE

- The NTP parameters are used to set the NTP server address, port number, and synchronization interval.
- The default SNMP version is SNMPv3, and the preset MD5/SHA password is **Changeme1**, and the preset DES/AES password is **Changeme2**. Change the password after your first login, preventing unauthorized access.
- For SNMPv2, the default read and write community names are **sread** and **swrite** respectively.
- To obtain the MIB file, choose **Config.** > **Site Config.** > **SNMP** > **Download HUAWEI_UPS_MIB**.
- **SNMP Trap** indicates the IP address of the server configured with network management system (NMS) software. If **SNMP Trap** is incorrectly set or not set, system information will be lost or not reported in time.
- The certificate is used for Secure Sockets Layer (SSL) encryption protection for WebUI login. You need to apply to a third-party institution for the certificate.
- **Configuration Management** is used to upload and export configuration parameters in the monitoring system.
- **Multi-brand Management** is used to import the brand information of a partner to the corresponding WebUI.
- Specify **Email server IP address**, **Sender's email**, and **User account authentication required** when sending a mail and click **Test** to check whether the test email can be received. **Configure Alarm Notification Server** is used to configure a server for receiving alarm emails from the monitoring system.
- Set **Email** and **Alarm Severity** and simulate an alarm. Check that the alarm email can be received. **Configure Alarm Notification Email Address** is used to configure the email address for receiving alarm emails from the monitoring system.

Copyright © Huawei Technologies Co., Ltd.

- **ModbusTCP Certificate Management**: MODBUS TCP supports the Transport Layer Security (TLS) secure protocol for encrypted transmission and implements access authentication through the bidirectional certificate. Customers can replace the UPS certificate with the certificate trusted by them.
- **ModbusTCP CA Certificate Management**: Import a CA certificate to verify the validity of the Modbus TCP access certificate.
- **ModbusTCP Authentication**: Verify the identity legitimacy of both parties to ensure data security for both parties in ModbusTCP communication.
- After eUPS certificate management is configured, a certificate can be imported on the WebUI to replace the preset eUPS certificate.

4.2.4.3 RCCMD

RCCMD

RCCMD function is set to **Disable** by default, as shown in Figure 4-88. If required, set it to **Enable** upon first login. After you submit the setting, the page refreshes. The controls such as **SSL Encrypted Transmission** and **Event Configuration** will be displayed on the page, as shown in Figure 4-89.

Figure 4-88 RCCMD function disabled

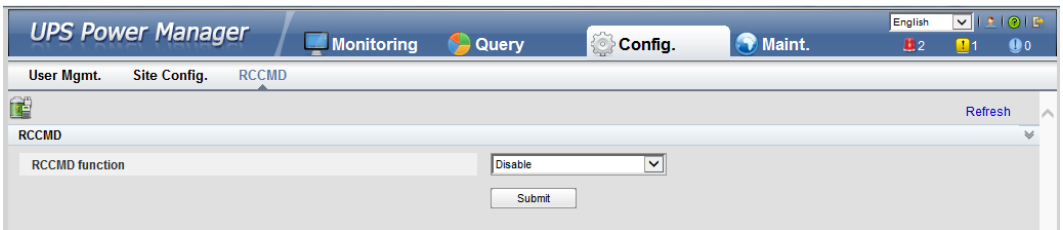

Copyright © Huawei Technologies Co., Ltd.

Figure 4-89 RCCMD function enabled

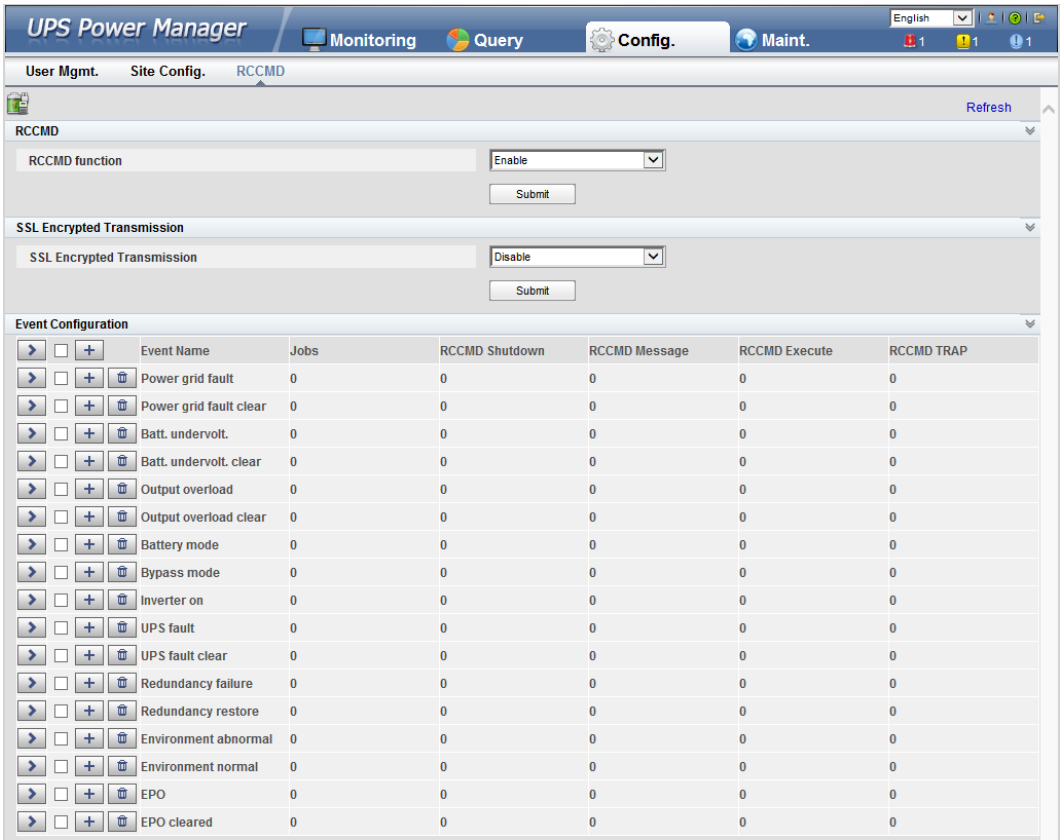

SSL Encrypted Transmission

NOTICE

The SSL encrypted transmission set on the page of the UPS5000E monitor display module (MDU) must be the same as the setting on the RCCMD client.

SSL Encrypted Transmission is set to **Enable** by default, as shown in Figure 4-90. If it is set to **Disable**, the RCCMD certificate controls will not be displayed on the page, as shown in Figure 4-91. If **SSL Encrypted Transmission** is set to **Disable**, a message indicating there is a risk will be displayed.

Copyright © Huawei Technologies Co., Ltd.

Figure 4-90 SSL encrypted transmission enabled by default

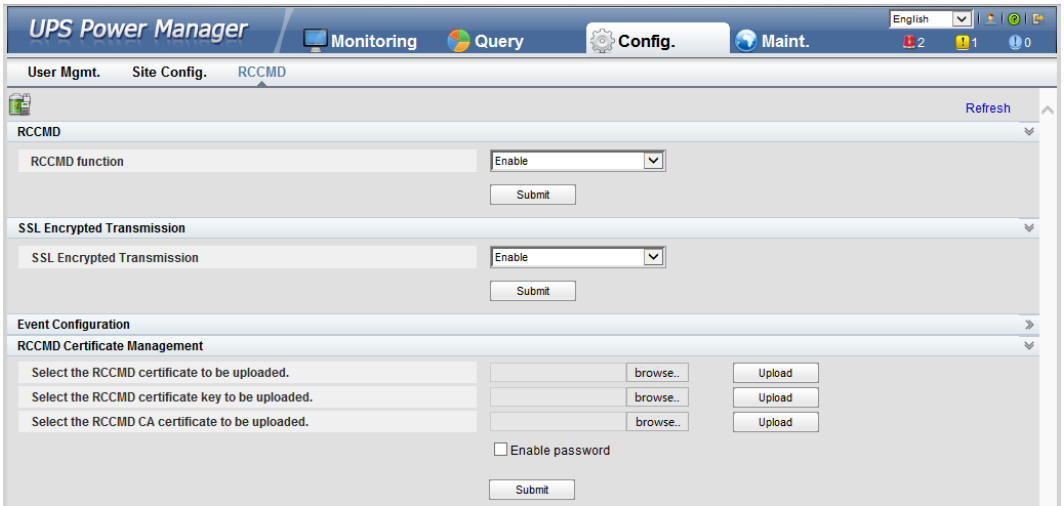

Figure 4-91 SSL encrypted transmission disabled

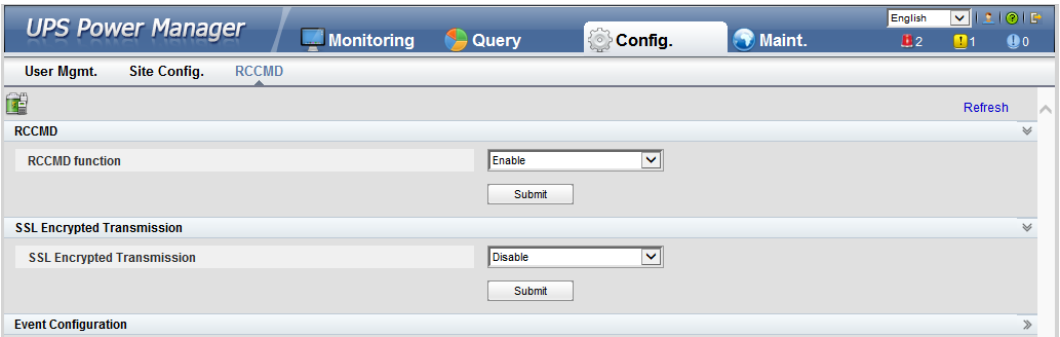

Event Configuration

The MDU supports 17 alarm events, and a maximum of 50 jobs can be added for each event, as shown in Figure 4-92. Figure 4-92 shows the buttons on the **Event Configuration** page, and Table 4-7 describes these buttons.

Copyright © Huawei Technologies Co., Ltd.

Figure 4-92 Event configuration page

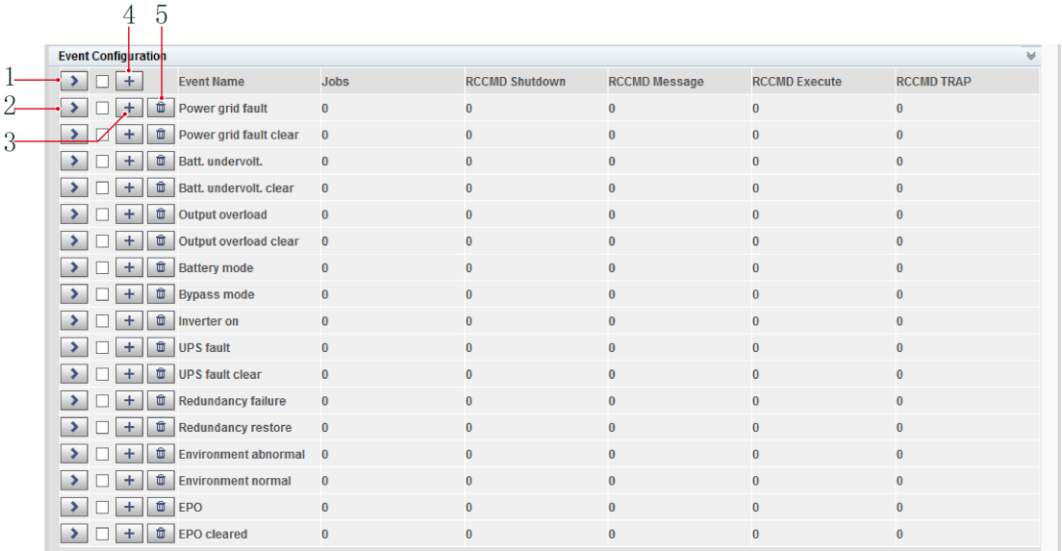

NOTE

Number of jobs = Number of **RCCMD Shutdown** jobs + Number of **RCCMD Message** jobs + Number of **RCCMD Execute** jobs + Number of **RCCMD TRAP** jobs.

Table 4-7 Buttons on the event configuration page

No.	Name	Description
1	Button for expanding all	You can view all jobs of all events by clicking this button.
2	Button for expanding one event	You can view all jobs of the event by clicking this button.
3	Button for adding one job	You can add one job for the event by clicking this button.
4	Button for adding one job for events	Select multiple events, and you can add one job for the selected events at the same time by clicking this button.
5	Button for deleting all jobs	You can delete all jobs of the event by clicking this button.

Figure 4-93 shows the buttons after one event is expanded and Table 4-8 describes these buttons.

Copyright © Huawei Technologies Co., Ltd.

Figure 4-93 Buttons after one event is expanded

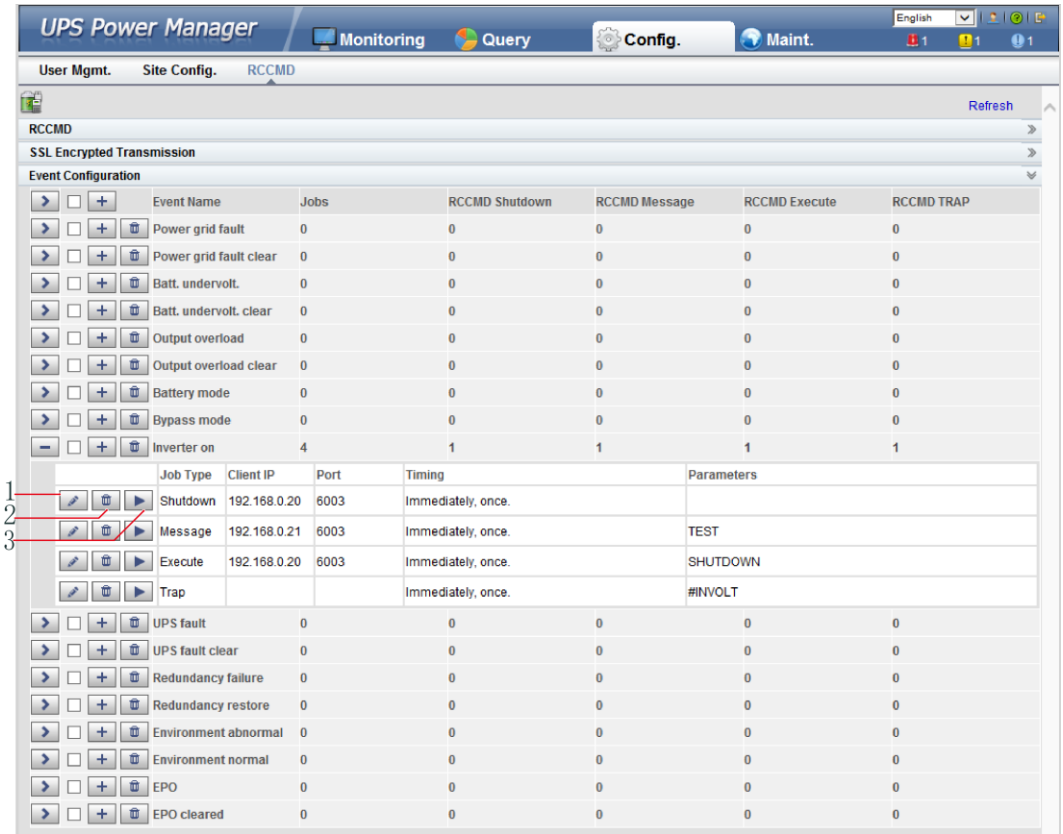

Table 4-8 Buttons after one event is expanded

No.	Name	Description
1	Button for modifying	A dialog box for modifying a job is displayed after you click this button. You can modify the job.
2	Button for deleting one job	You can delete the job by clicking this button.
3	Button for test	If you click this button, the job will be performed and a message showing test succeeds or fails will be displayed on the page.

Adding one job for one event: Select one event (for example, **Inverter on**), click the button for adding one job, and the page for adding a job for the event is displayed.

When adding a job, the job types to be selected are: **RCCMD Shutdown**, **RCCMD Message**, **RCCMD Execute**, and **RCCMD TRAP**. **RCCMD Shutdown** is selected by default. For different job types, you need to enter different contents.

Copyright © Huawei Technologies Co., Ltd.

- **RCCMD Shutdown**: You need to specify the RCCMD client IP address and port. When the RCCMD client receives the job, it will shut down the computer.

Figure 4-94 RCCMD shutdown

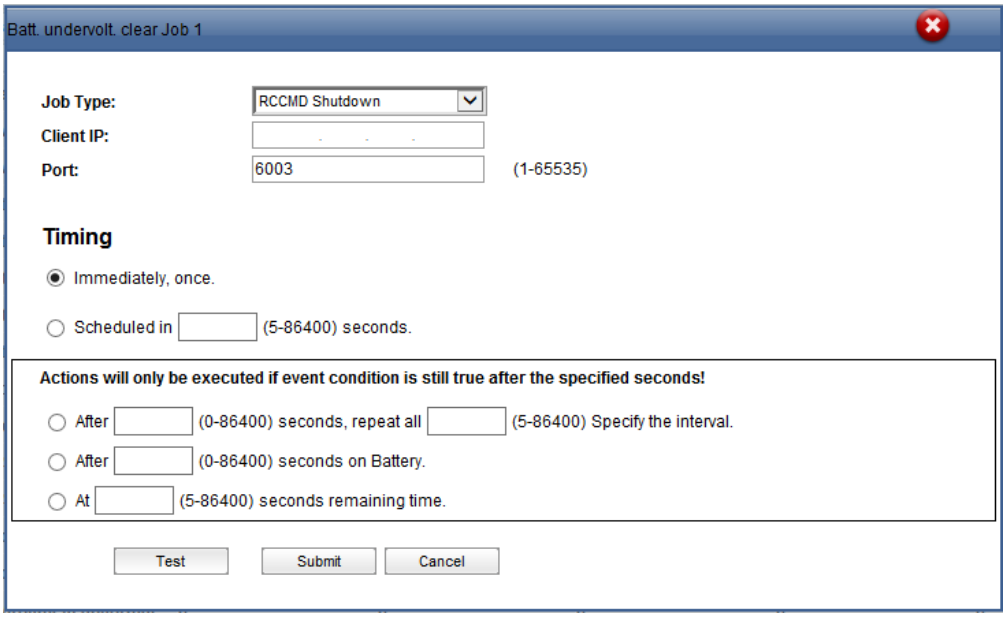

- **RCCMD Message**: Specify the RCCMD client IP address, port, and message to be conveyed. The RCCMD client will receive the message. For example, enter "This is a test message".

Figure 4-95 RCCMD message

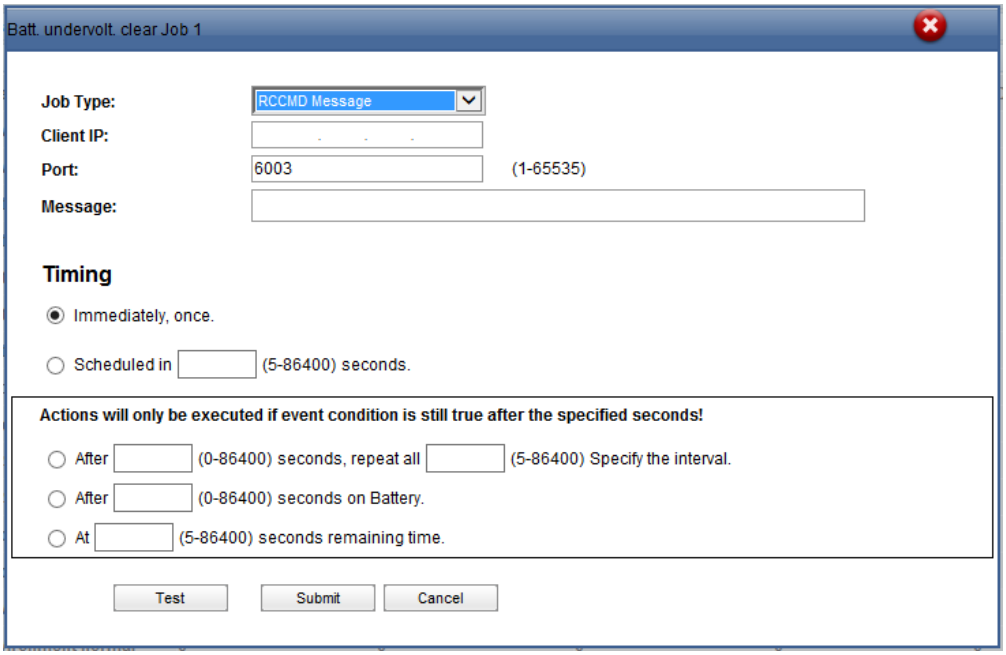

Copyright © Huawei Technologies Co., Ltd.

- **RCCMD Execute**: Specify the RCCMD client IP address, port, and command to be executed. For example, enter **SHUTDOWN**, and the RCCMD client will shut down the computer after receiving the command.

Figure 4-96 RCCMD execute

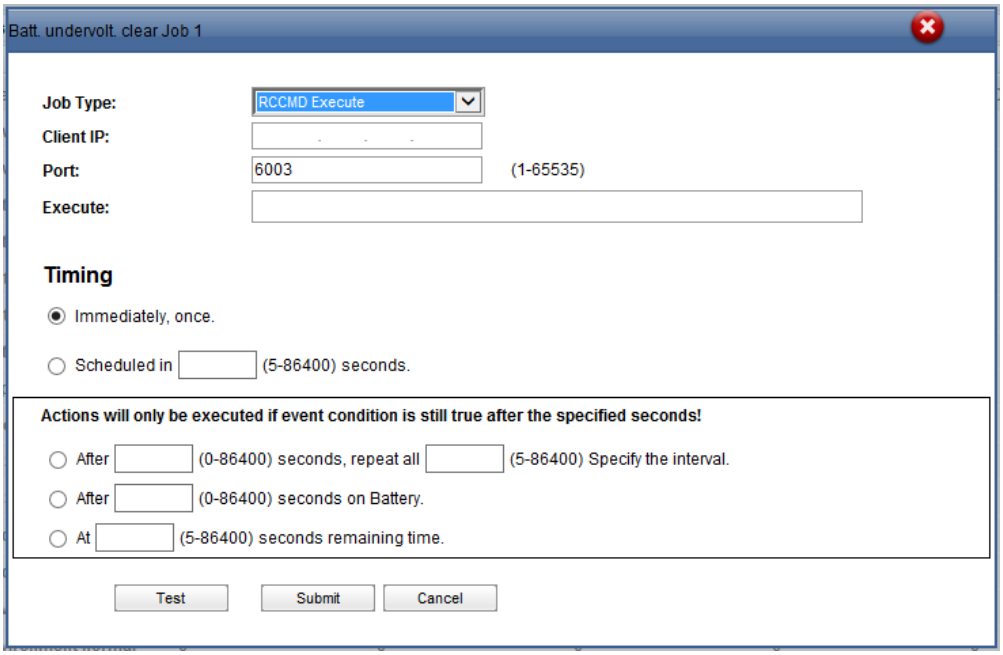

- **RCCMD TRAP**: When the event happens, the MDU will send the TRAP message to all connected RCCMD clients based on the sending mechanism.

  If you want to define the TRAP message by yourself, you can use the TRAP signal to display the UPS information. For example, if you enter **#INVOLT V**, the RCCMD client will receive the UPS input voltage value (for example, single-phase: 220 V; three-phase A: 220 V, B: 220 V, C: 220 V). Table 4-9 lists the signal names that can be entered.

Copyright © Huawei Technologies Co., Ltd.

Figure 4-97 RCCMD TRAP

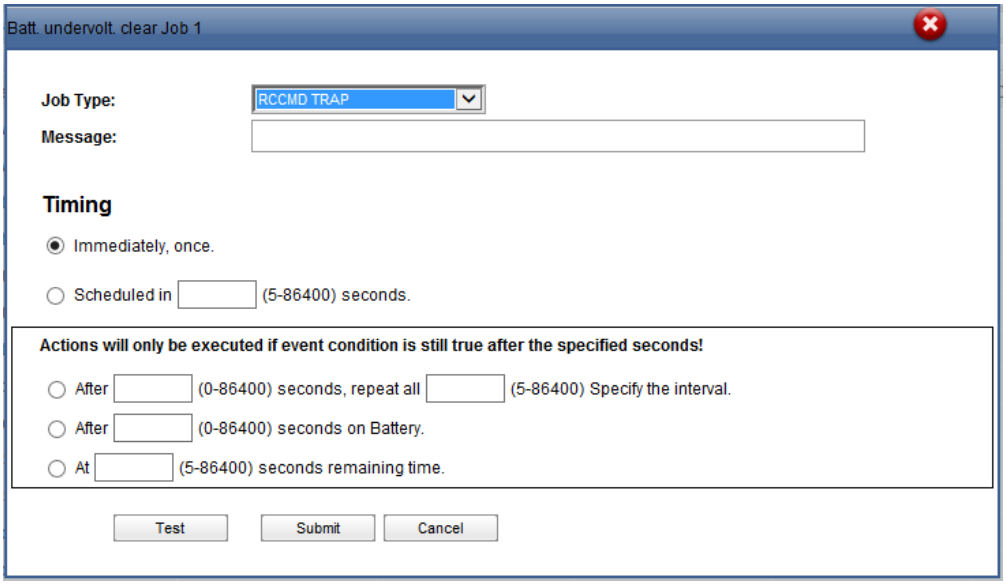

Table 4-9 RCCMD TRAP signal

Signal Name	Description	Unit in the UPS
#MODEL	Device name	N/A
#OUTPOWER	Active power	kW
#OUTVOLT	Output voltage	V
#OUTCURR	Output current	A
#OUTLOAD	Output load rate	%
#BATTCAP	Remaining battery capacity	%
#INVOLT	Input voltage	V
#BYPASSINVOLT	Bypass input voltage	V
#TEMPDEG	Temperature inside the UPS	Celsius
#AUTONOMTIME	Battery backup time	minutes
#STATUS	UPS status	N/A
#RUNTIME	UPS operating time	minutes
#BATTVOLT	Battery voltage	V
#INFREQ	Input frequency	Hz
#BYPASSINFREQ	Bypass input frequency	Hz
#OUTFREQ	Output frequency	Hz
#CNT_PF	Power supply failure times	N/A

Copyright © Huawei Technologies Co., Ltd.

Signal Name	Description	Unit in the UPS
#CNT_BL	Low battery voltage times	N/A
#INPHASES	Input phases	N/A
#OUTPHASES	Output phases	N/A

When you add a job, five sending methods are available. The latter three methods can take effect only when the event condition is still true after the specified seconds.

- **Immediately, once**: After the event happens, the job will be sent to the RCCMD client immediately.
- **Scheduled in X seconds**: After the event happens, the job will be sent to the RCCMD client once in X seconds. No matter whether the event disappears or not within X seconds, the job will be sent.
- **After X seconds, repeat all Y (5–86400) Specify the interval**: After the event happens, the job will be sent once in X seconds, and then be sent once every Y seconds.
- **After X seconds on Battery**: After the battery mode is activated for X seconds, the job will be sent to the RCCMD client once.
- **At X seconds remaining time**: When the battery backup time has only X seconds left, the job will be sent to the RCCMD client once.

NOTE

X and Y are variables and stand for time.

RCCMD Certificate Management

NOTICE

- After replacing the certificate on the MDU WebUI, replace the certificate on the RCCMD client too. Otherwise, communication will fail. For details about the replacing method, see the RCCMD user manual.
- The default certificate provided by the system has expired. Replace the certificate immediately.

After **SSL Encrypted Transmission** is set to **Enable**, **RCCMD Certificate Management** is displayed. The RCCMD certificate, RCCMD certificate key, and RCCMD CA certificate can be uploaded, as shown in Figure 4-98. If the RCCMD certificate or RCCMD CA certificate is not uploaded, the default certificate provided by the system is used for communication. After the certificate is uploaded successfully, click **Submit**. The WebUI of the MDU will restart, and the uploaded certificate will be used for communication.

Copyright © Huawei Technologies Co., Ltd.

Figure 4-98 RCCMD certificate management

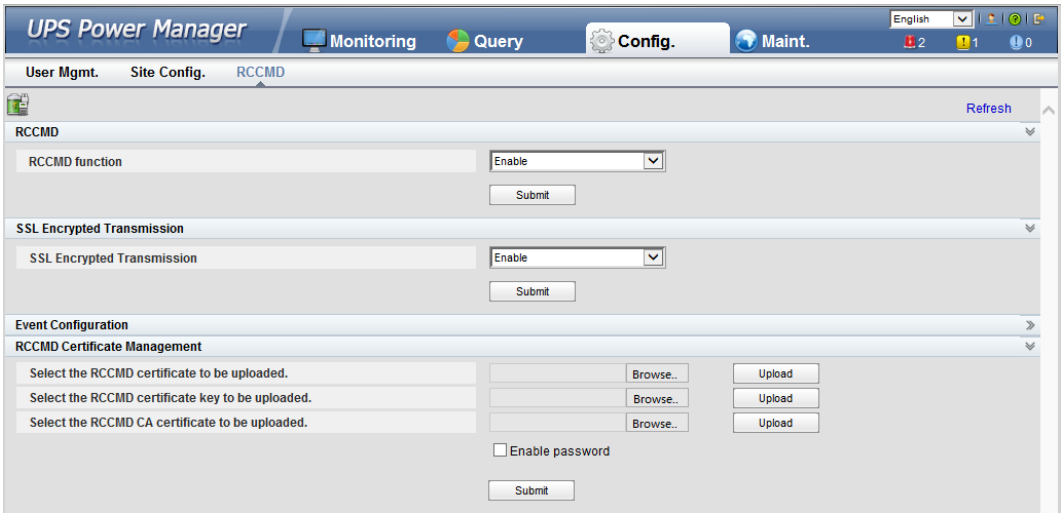

NOTE

If the RCCMD certificate key has been encrypted, enable and enter the key password.

4.2.4.4 Managing the UPS by Using the NMS Complying with RFC1628 Standard

Installing the UPS MIB

The MIB is in the MDU. Click **Download UPS-RFC1628-MIB** on the page of the web browser to download the MIB file which allows the third-party NMS of Generex to manage the UPS remotely.

Figure 4-99 RCCMD certificate management

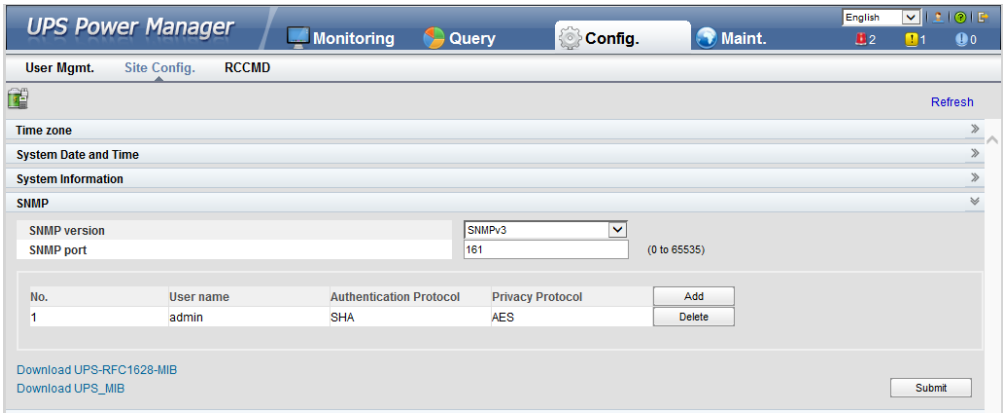

NOTE

The UPS-RFC1628-MIB has more alarms than RFC1628. Download the UPS-RFC1628-MIB before using.

Copyright © Huawei Technologies Co., Ltd.

Managing the UPS by Using the NMS

- Applying for Access Rights

  To manage the UPS by using the UNMS of Generex over the MDU, apply to the system administrator of the MDU for access rights and add the NMS information to the NMS access list of the MDU. The NMS address and access right settings are used for adding information about the NMS accessing the MDU, including the NMS address, access right, and Trap port. For details about how to add an NMS over a web browser, see Figure 4-100.

  Figure 4-100 RCCMD certificate management

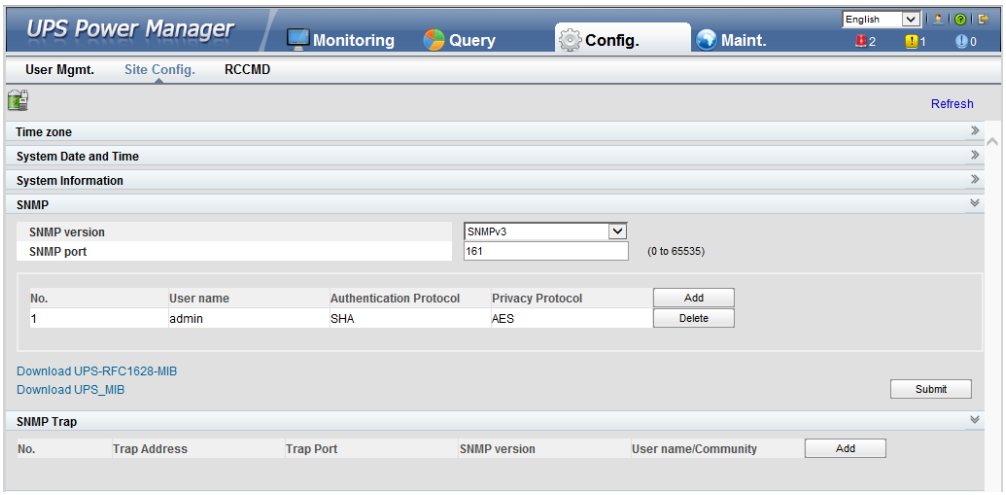

- Managing the UPS

  Take the UNMS of Generex for example. The method for managing the UPS by using the UNMS is the same as the method for managing other devices by using the UNMS. For details, see the UNMS user manual.

4.2.5 Maint. Page

On the homepage, click the **Maint.** tab to open the **Maint.** page. Maintenance functions include calibration, commissioning variables, upgrade, and downloading data.

Figure 4-101 Calib. page

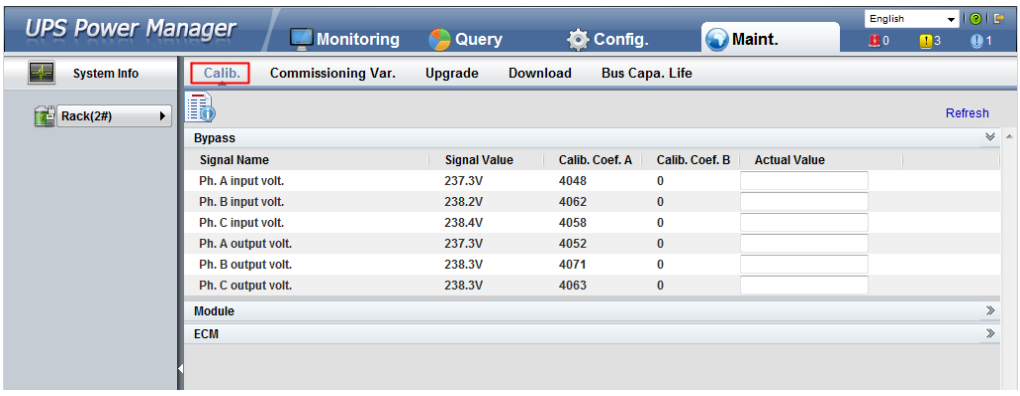

Copyright © Huawei Technologies Co., Ltd.

Figure 4-102 Commissioning Var. page

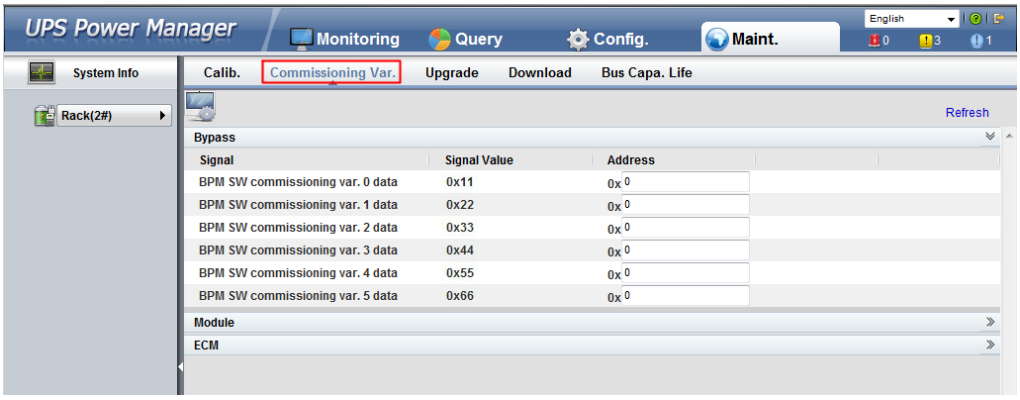

Figure 4-103 Upgrade page

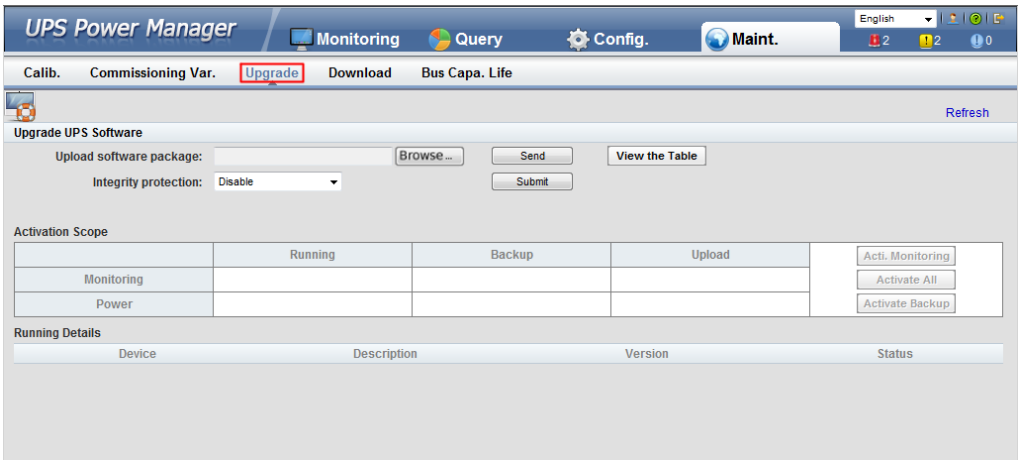

Figure 4-104 Download page

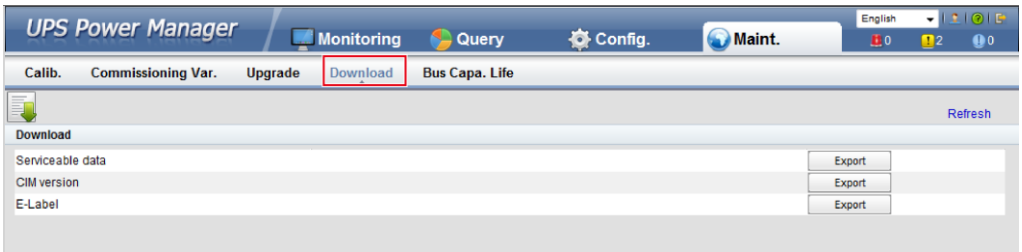

Copyright © Huawei Technologies Co., Ltd.

Figure 4-105 Bus Capa. Life page

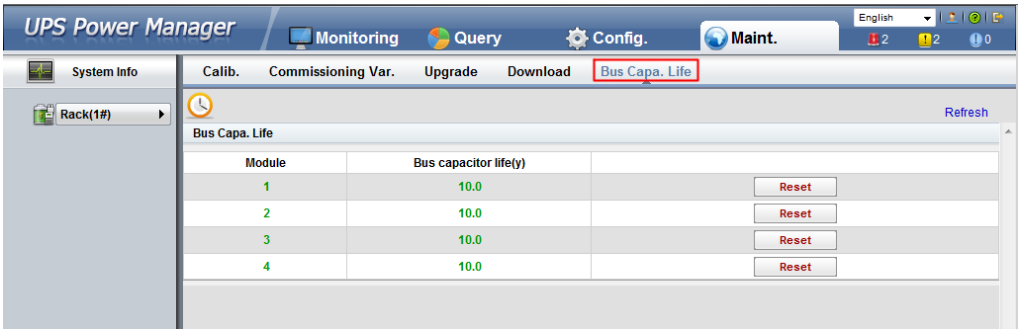

4.2.6 Protecting the Server by Using the RCCMD Software

4.2.6.1 Introduction to the Software

The RCCMD shutdown software is part of the centralized monitoring system of the Generex network. The UPS5000 MDU integrates the functions of the Generex RCCMD server:

- Sends the shutdown command, notification message, and Trap message to the RCCMD client if the UPS system generates an alarm; executes commands on the RCCMD client.
- Receives the message "UPS alive check" sent by the RCCMD client and replies with the system status.
- Configures and saves the address and port for receiving the shutdown command, and the message sending mechanism.

For the method of installing the RCCMD client, see the manual related to the RCCMD.

4.2.6.2 RCCMD Event Shutdown and Message Sending

Procedure

Step 1 On the RCCMD client, choose **Connections**, add the server IP address, and set the encryption mode to encryption.

NOTE

- If encryption is disabled, you do not need to select the encrypted transmission.
- All configurations take effect only after restart.

Copyright © Huawei Technologies Co., Ltd.

Figure 4-106 Setting the MDU IP address and SSL encrypted transmission mode on the RCCMD client

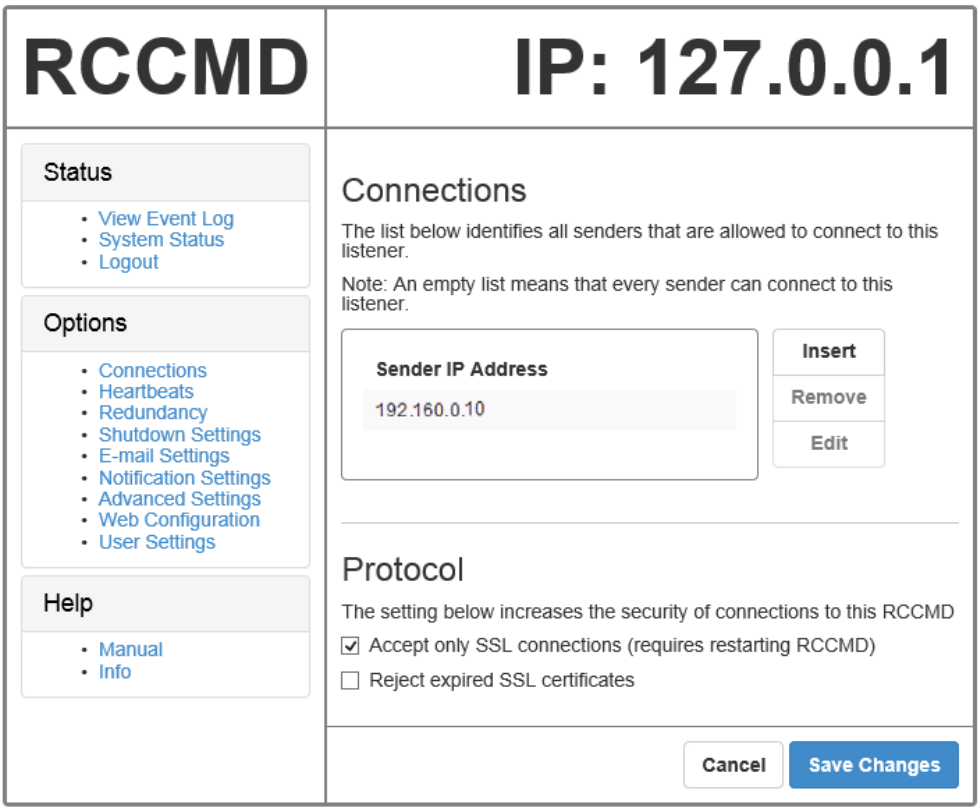

Step 2 On the MDU WebUI, choose **Config.** > **RCCMD**, and set **RCCMD function** to **Enable**. For details, see 4.2.4.3 RCCMD.

Step 3 On the WebUI of the MDU, the SSL encryption is set to **Enable** by default and does not need to be set. If the RCCMD client is set to the unencrypted mode, you need to set the SSL encryption to **Disable** on the server WebUI.

Step 4 Configure events. If you set the job type to **RCCMD Message** under **Inverter on**, specify the IP address and port of the RCCMD client. The port is 6003 by default. If you need to modify the port, modify the port on the RCCMD client at the same time to keep them the same. Enter the message to be sent and set the message sending mechanism. For example, set it to **Immediately, once**.

Step 5 On the **Monitoring** > **Control** page, start the UPS, and the inverter mode will be triggered. Send the message indicating that the inverter is on.

Step 6 On the RCCMD client, you can view messages through the **View Event Log** at the upper left corner.

----End

Copyright © Huawei Technologies Co., Ltd.

4.2.6.3 UPS Alive Check Function

Context

NOTICE

Whether the RCCMD SSL encrypted transmission is enabled on the WebUI of UPS5000 MDU and RCCMD client is irrelevant to the heartbeat detection function. Only when the SSL encryption is enabled on the RCCMD client, the logs recorded by the RCCMD client are marked with "(SSL...)".

On the RCCMD client, the IP address of the MDU that detects heartbeat needs to be added. Then the UPS alive check function is supported; the RCCMD can check whether the UPS and RCCMD communicate properly; the RCCMD can receive messages sent by the MDU.

Procedure

Step 1 On the RCCMD client, add the IP address of the MDU that detects heartbeat, as shown in Figure 4-107.

Step 2 The UPS5000 MDU supports both ways of heartbeat detection. If the job configured for the MDU event is set to **RCCMD TRAP**, the RCCMD client needs to be set to **by the use of CS121/UPSMAN Traps**. If **by polling CS121/UPSMAN every x seconds...** is selected as the method of detecting heartbeats, set the detection method. The default interval is 1800s and detection is performed 100 times, as shown in Figure 4-107.

Copyright © Huawei Technologies Co., Ltd.

Figure 4-107 Heartbeat detecting mode on the RCCMD client

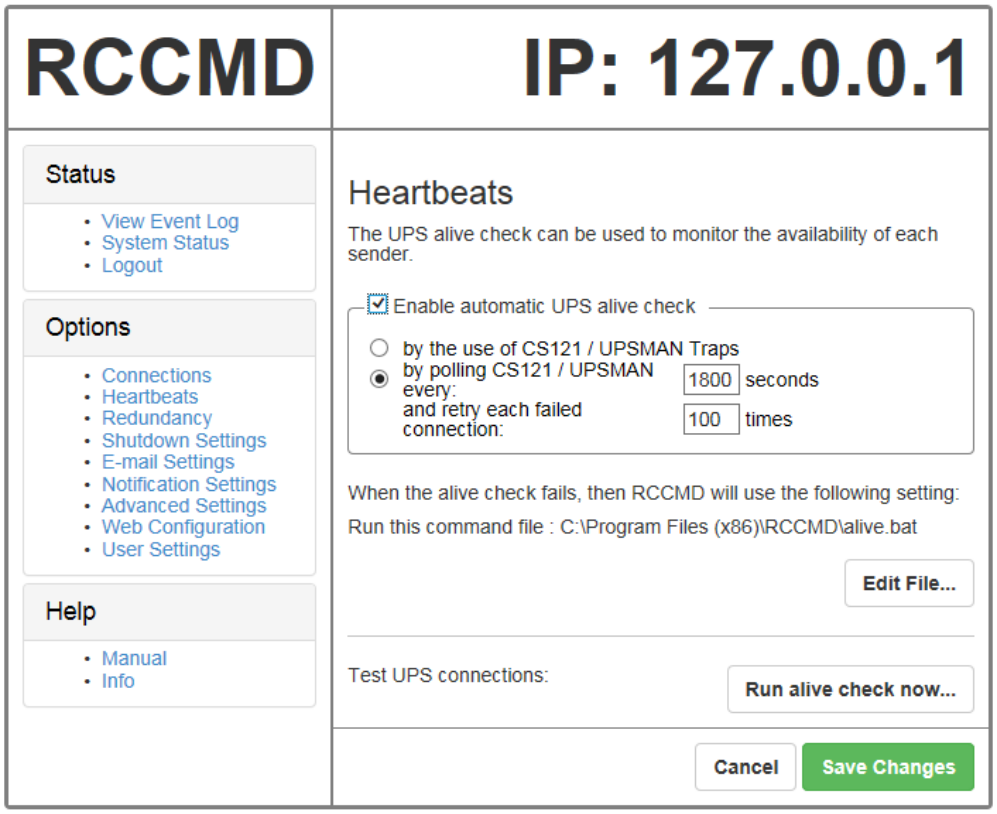

You can also manually detect heartbeat by clicking **Run alive check now...**.

Copyright © Huawei Technologies Co., Ltd.

Figure 4-108 Detecting heartbeat manually

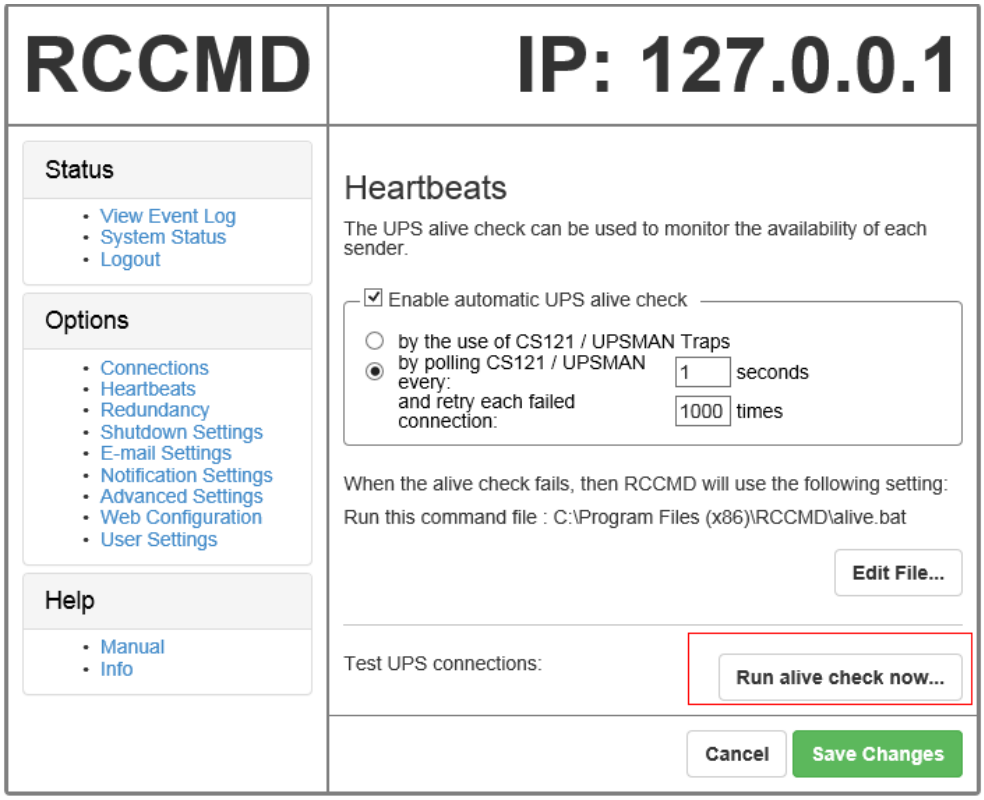

Figure 4-109 Detecting heartbeat manually and successfully

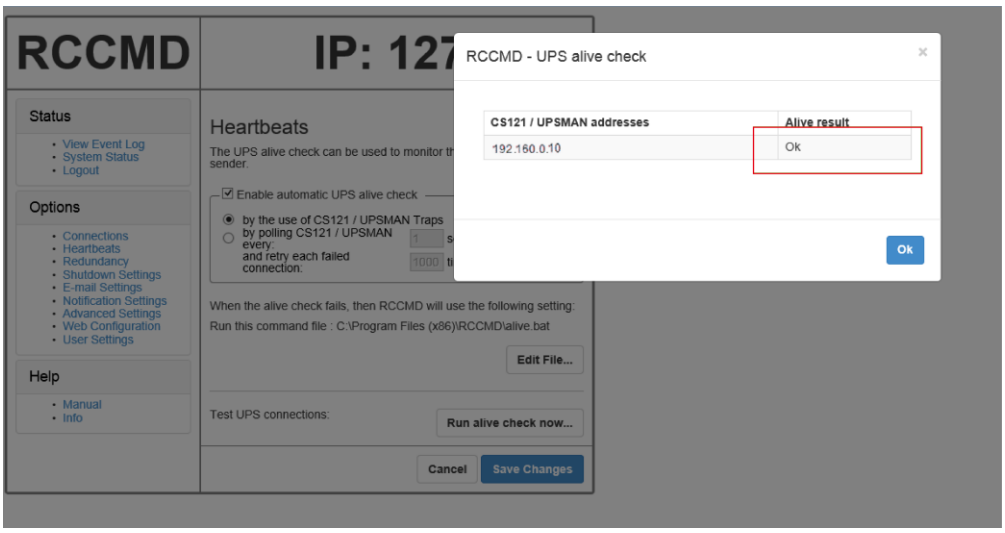

----End

Copyright © Huawei Technologies Co., Ltd.

5 Operations

5.1 Powering On and Starting the UPS

Prerequisites

NOTICE

Measure the voltage and frequency where the UPS input circuit breakers (mains and bypass input circuit breakers) on the input PDC or the external input switch is located. The voltage range is 138–485 V AC (line voltage), and the frequency range is 40–70 Hz.

Context

Copyright © Huawei Technologies Co., Ltd.

NOTICE

- The following operations are specified for a single UPS. For parallel systems, contact Huawei technical support.
- Before powering on the UPS, check that the UPS has passed all check items described in section 3.4 Installation Verification, and check that all external and internal switches are OFF (except for the ready switches for the power module and bypass module, which are in locked state). Figure 5-1 shows the bypass module ready switch, and Figure 5-2 shows the power module ready switch.

Figure 5-1 Bypass module ready switch

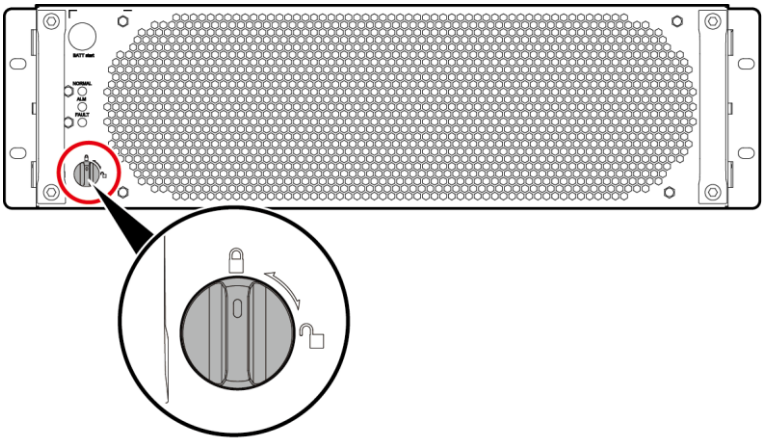

Figure 5-2 Power module ready switch

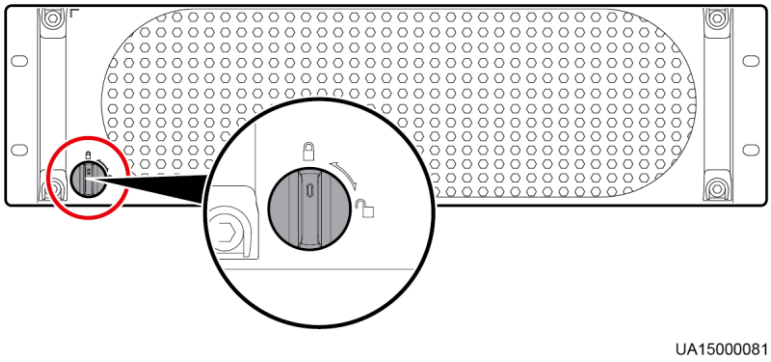

Procedure

Step 1 Power on the UPS. The following describes the details about powering on the UPS in full configuration and in standard configuration.

- To power on a UPS in full configuration, perform the following operations: (A UPS in full configuration is configured with the internal mains input switch, internal bypass input switch, internal output switch, and internal maintenance bypass switch.)

Copyright © Huawei Technologies Co., Ltd.

a. Close the external bypass and mains input power distribution switches.

b. Close the internal bypass input switch, mains input switch, and output switch.

The UPS starts initialization. The LCD displays the Huawei logo and an initialization progress bar.

- To power on a UPS in standard configuration, perform the following operation: (A UPS in standard configuration is configured with only the internal maintenance bypass switch.)

  Close the external bypass and mains input power distribution switches.

  The UPS starts initialization. The LCD displays the Huawei logo and an initialization progress bar.

Step 2 After the LCD starts, perform the following steps:

- If the UPS is starting for the first time, set the language, date and time, network parameters, and system parameters on the **Settings Wizard** screen.
- If this is not the first startup, retain the previous settings.

NOTE

After the settings are specified, the **Bypass mode** and **No battery** alarms are displayed on the LCD.

The main buttons on the **Settings Wizard** screen are described as follows:

- Tap **Previous** to return to the upper-level screen.
- Tap **Next** to go to the next screen.
- Tap **Cancel** to exit the **Settings Wizard** screen.

1. Press **Down** and **Up** to view the available language types, as shown in Figure 5-3.

Figure 5-3 Language screen

2. Tap **Next** to enter the **Time** screen and select a date format, as shown in Figure 5-4.

NOTICE

Ensure the date and time is set correctly. Incorrect time display in running and alarm information can lead to analysis errors during maintenance or repair.

Copyright © Huawei Technologies Co., Ltd.

Figure 5-4 Time screen

3. On the **Network Param.** screen, set **IP address allocation**, **IP address**, **Subnet mask**, and **Gateway**, as shown in Figure 5-5. For details, see Communications Settings in section 4.1.3.4 Settings Screen.

Figure 5-5 Network Param. screen

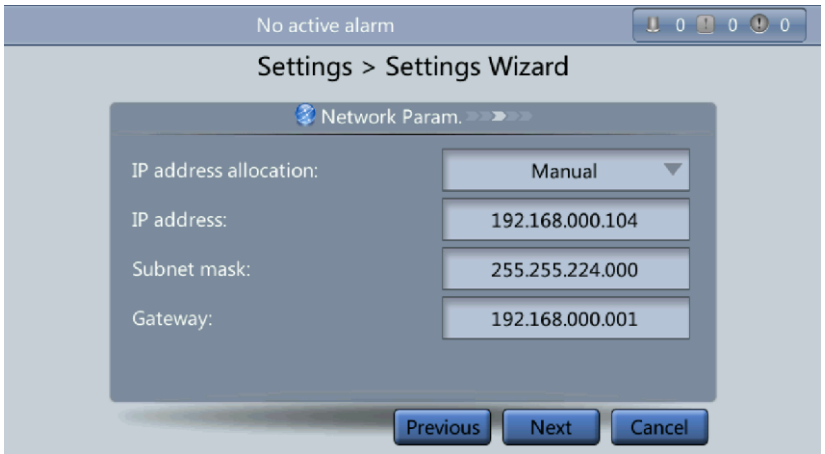

NOTE

After setting network parameters, connect the UPS to the network over a network cable, which enables remote management of the UPS. If remote management is not required, retain the default network parameter settings.

4. On the **System Param.** screen, select **Single** (default value) or **Parallel**, as shown in Figure 5-6. Set the **Output voltage level**, **Output frequency**, **Battery capacity**, and **Number of cells**, as shown in Figure 5-7.

NOTICE

System parameter settings affect UPS operation. Before setting system parameters, note the following:

Copyright © Huawei Technologies Co., Ltd.

- Set **Single/Parallel** with caution. Incorrect setting may affect the normal running of the UPS.
- **Output voltage level** refers to the line voltage level. Set it based on the site requirements.
- Set **Output frequency** correctly; otherwise, the UPS cannot work properly and the loads may be affected.

Figure 5-6 System Param. 1 screen

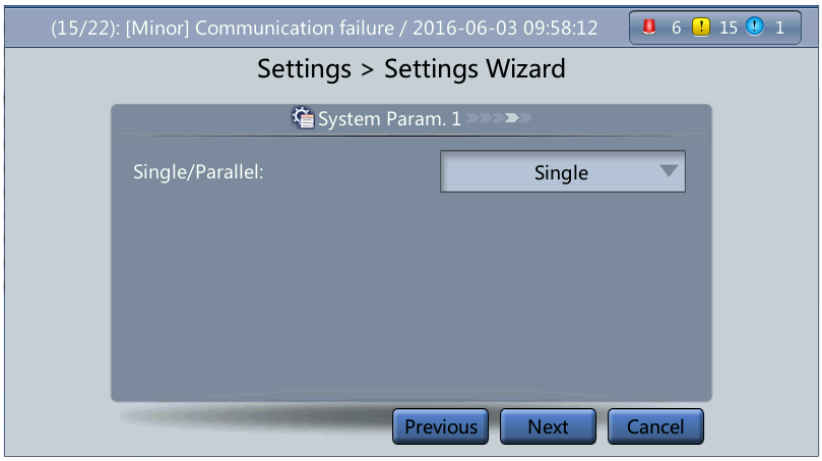

NOTICE

Battery parameter settings impact the battery maintenance, battery lifespan, and UPS discharge time. Before setting battery parameters, note the following:

Copyright © Huawei Technologies Co., Ltd.

- **Battery capacity** is set only after the dialog box is confirmed. An incorrect setting reduces the charging power.
- When a battery string is shared, the battery capacity of each UPS is the total capacity of battery strings; when no battery string is shared, the battery capacity of each UPS is the battery capacity of the single UPS.
- A high or low charging power may shorten the battery lifespan, or even damage batteries. If the battery capacity cannot be confirmed, contact Huawei technical support.
- **Number of cells** refers to the number of 2 V cells in a single battery string connected to the UPS. For example, the number of cells must be a multiple of 12 (for example, 180 and 192). If 36 batteries (150 Ah, 12 V) are connected in series to form a battery string, and two of such battery strings are connected in parallel and then to the UPS, set **Number of cells** to **216** (36 x 6) and **Battery capacity** to **300 Ah** (150 Ah + 150 Ah). If 192 batteries (300 Ah, 2 V) are connected in series to form a battery string, and two of such battery strings connected in parallel and then to the UPS, set **Number of cells** to **192** (192 x 1) and **Battery capacity** to **600 Ah** (300 Ah + 300 Ah). An incorrect setting will cause a high or low charge voltage, which greatly shortens the battery lifespan. Moreover, the UPS may shut down before the batteries are fully discharged, which may lead to a data backup fault.

Figure 5-7 System Param. 2 screen

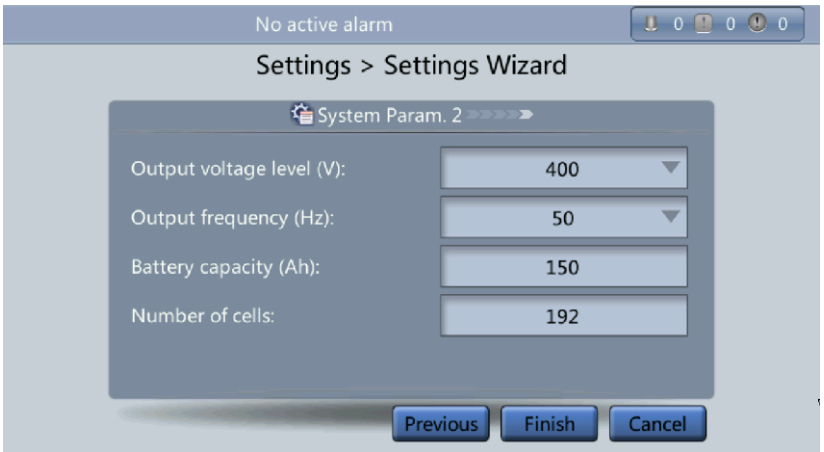

Step 3 If no alarm is displayed on the **Monitoring** screen, skip this step; if an alarm is displayed, clear the alarm.

NOTE

- After setting parameters on the **Settings Wizard** screen, tap **System Info** > **Settings** > **Advanced Param.**. Check that **System Capacity**, **Power module capacity**, **Requisite modules** and **Redundant modules** match the actual values.
- Tap **System Info** > **Settings** > **Dry contacts**. Set the dry contacts that are used to **Enable** and the dry contacts that are not used to **Disable**.

Step 4 Check that the bypass input is normal and the system has transferred to bypass mode. View the system running diagram on the LCD to confirm this action.

Step 5 Start the inverter.

- Using the LCD:

  a. If no user is logged in, enter a user name and password, and tap on the login screen displayed, as shown in Figure 5-8.

Copyright © Huawei Technologies Co., Ltd.

Figure 5-8 Login

NOTE

- For details about default user names, preset passwords, and user rights, see Table 4-5.
- If an incorrect password is entered three consecutive times, the account will be locked out for 5 minutes.

b. On the LCD, choose **Common Functions**, and tap **Inv. ON**.

c. In the displayed dialog box, tap **Yes** to start the inverter, as shown in Figure 5-9.

Figure 5-9 Starting the inverter

NOTE

You can also choose **System Info** > **Maintenance**. In the **Maintenance** screen, start the inverter.

- Over the WebUI:

a. Open the browser (Internet Explorer 11 as an example) and choose **Tools** > **Internet Options**.

NOTE

The UPS supports Internet Explorer 11 and Firefox 31.0.

b. On the **Advanced** tab page, ensure that **Use TLS 1.0**, and **Use TLS 1.1** are selected and click **OK**, as shown in Figure 5-10.

Copyright © Huawei Technologies Co., Ltd.

Figure 5-10 Settings in the Internet Options dialog box

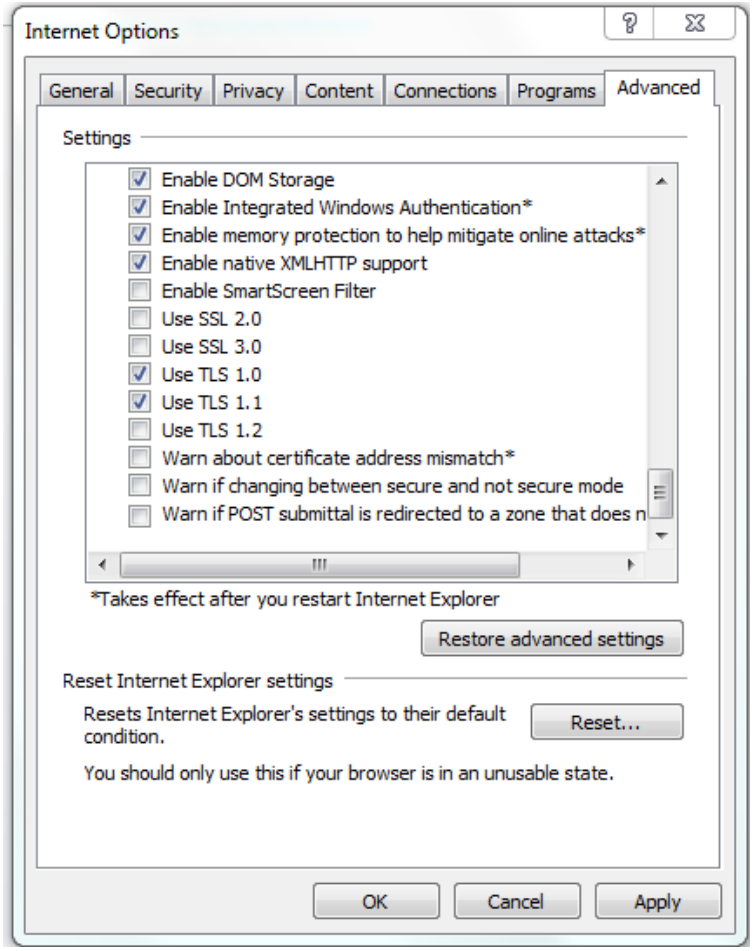

c. Enter **https://*UPS IP address*** in the address box of the browser.

d. Select a language. Enter a **User name** and **Password**, and click **Login** to open the homepage, as shown in Figure 5-11.

Figure 5-11 WebUI login

Copyright © Huawei Technologies Co., Ltd.

NOTE

- For details about default user names, preset passwords, and user rights, see Table 4-5.
- If an incorrect password is entered three consecutive times, the account will be locked out for 5 minutes.

e. On the homepage, choose **Monitoring** > **Control**, and click **Inv. ON**. In the displayed dialog box, click **OK** to start the inverter, as shown in Figure 5-12.

Figure 5-12 Starting the inverter

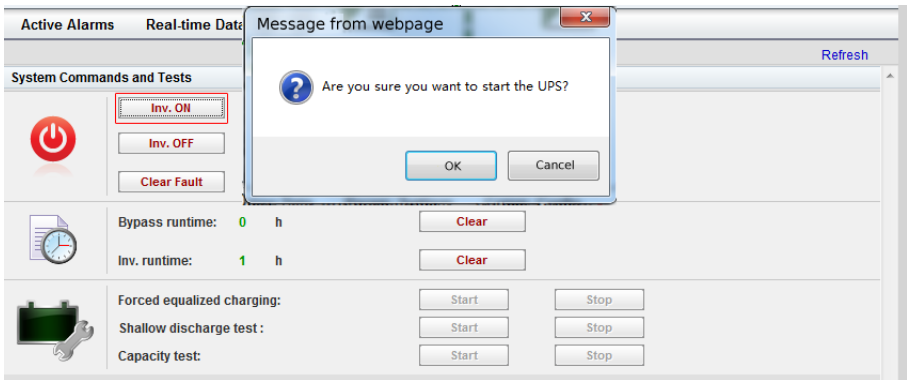

NOTE

If the power module receives a startup command when it cannot be started, the startup command will be kept for 1 minute. If the startup command is not cleared within 1 minute (for example, other faults occur on the module, or shutdown or fault rectification is performed) and the module can be started, the module responds to the startup command.

Step 6 After the inverter starts, the UPS works in normal mode. The Bypass mode alarm disappears. Check that the UPS has transferred to normal mode by viewing the system running status diagram. During commissioning, check whether the UPS three-phase output voltage and frequency are normal by viewing **AC Output** on the screen. Use a multimeter to check whether the three-phase output voltage and frequency are normal, as shown in Figure 5-13 and Figure 5-14.

Figure 5-13 Common Functions screen

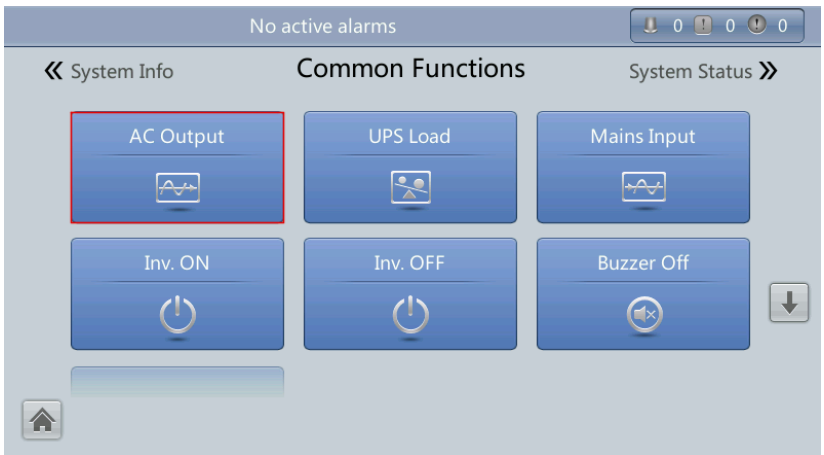

Copyright © Huawei Technologies Co., Ltd.

Figure 5-14 AC Output screen

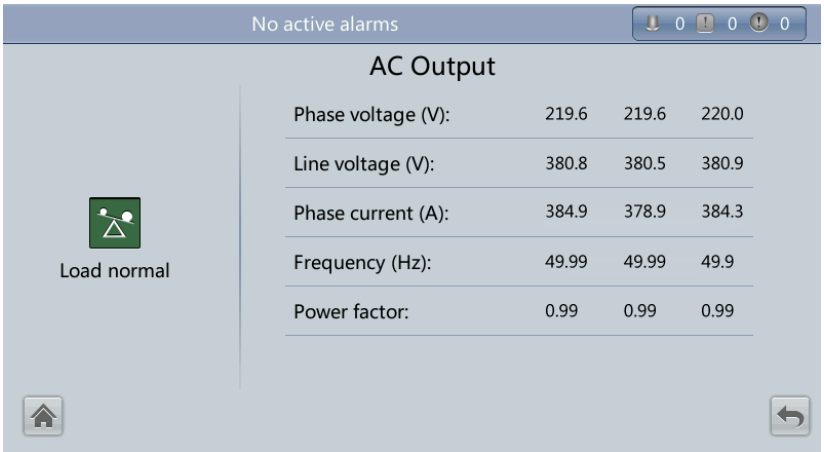

Step 7 Verify that the actual battery capacity and number of cells are consistent with the corresponding values set on the LCD. (A 2 V battery is a cell. If a battery is 12 V, the number of cells is equal to the number of batteries multiplied by 6. If a battery is 2 V, the number of cells is equal to the number of batteries.) Use a multimeter to check that the sum of the absolute voltage of the negative battery string and the voltage of the positive battery string is greater than a certain value (2 x number of cells) to ensure that the battery strings are connected properly.

NOTICE

Number of cells indicates the number of 2 V cells connected to the UPS. **Number of cells** affects the charge voltage and discharge time. An incorrect setting will cause a high or low charge voltage, which greatly shortens the battery lifespan. Moreover, the UPS may shut down before the discharging is completed, which may result in data backup failure. Table 5-1 lists examples of setting battery parameters.

Table 5-1 Battery parameter settings

Battery Specifications	Number of Batteries	Number of Battery Strings	Number of Cells	Battery Capacity
150 Ah/12 V	36 batteries in series	Two battery strings connected in parallel	36 x 6 = 216	150 Ah + 150 Ah = 300 Ah
300 Ah/2 V	192 batteries in series	Two battery strings connected in parallel	192 x 1 = 192	300 Ah + 300 Ah = 600 Ah
300 Ah/12 V	40 batteries in series	Three battery strings connected in	40 x 6 = 240	300 Ah + 300 Ah + 300 Ah =

Copyright © Huawei Technologies Co., Ltd.

Battery Specifications	Number of Batteries	Number of Battery Strings	Number of Cells	Battery Capacity
		parallel		900 Ah
300 Ah/2 V	240 batteries in series	Four battery strings connected in parallel	240 x 1 = 240	300 Ah + 300 Ah + 300 Ah + 300 Ah = 1200 Ah

Step 8 After checking that the battery strings are properly connected, close the battery switch. (If there are multiple battery strings, close the switch for each battery string, and then close the general switch between the battery strings and the UPS.)

NOTE

After the battery switch is closed, the **No battery** alarm disappears on the MDU.

Step 9 (Optional) If the BCB box is configured, choose **Settings** > **Dry Contacts**, set **MUE05A connection** to **Enable**, and then set **BCB connection [OL]** and **Battery breaker [STA]** to **Enable**.

Figure 5-15 BCB connection

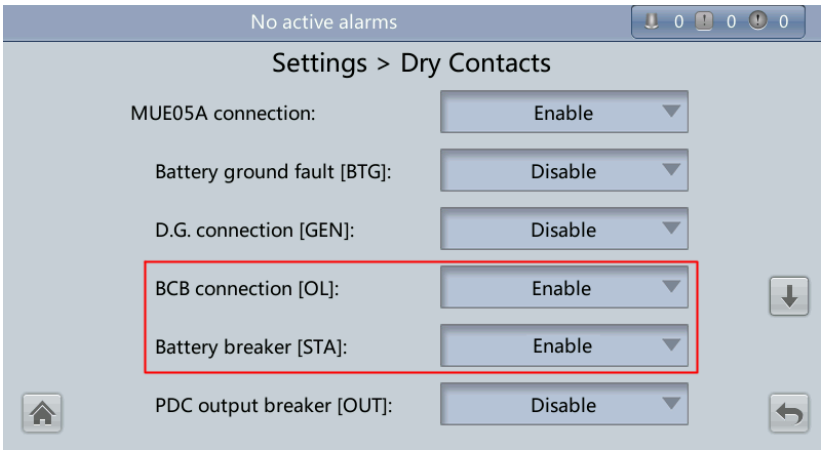

Step 10 Close the UPS output circuit breaker on the output PDC, or close the external output distribution switch to supply power to loads.

NOTE

If the UPS has powered on or is working in bypass mode, and needs to be transferred to normal mode, check that no alarm has been generated and perform Step 5.

----End

Copyright © Huawei Technologies Co., Ltd.

5.2 Shutting Down and Powering Off the UPS

Context

NOTICE

After the inverter is shut down, if the bypass is normal, the UPS transfers to bypass mode; if the bypass is not normal, the UPS supplies no power. Before shutting down the UPS, ensure that all loads have shut down.

Procedure

Step 1 Shut down the inverter.

- On the LCD
  a. On the main screen, tap **Common Functions**. Tap **Inv. OFF**.
  b. If no user is not logged in, enter a user name and password, and tap on the login screen displayed.

NOTE

- Table 4-5 lists the default user names and preset passwords and describes the permission of the default users.
- If an incorrect password is entered three consecutive times, the account will be logged out for 5 minutes.

  c. In the displayed dialog box, tap **Yes** to shut down the inverter.

Figure 5-16 Inv. OFF screen

NOTE

To shut down the inverter on the **Maintenance** screen, tap **System Info** > **Maintenance**.

- On the WebUI
  a. In the browser, enter the UPS IP address in the address box.

Copyright © Huawei Technologies Co., Ltd.

b. On the login page, select a display language, enter a **User name** and **Password**, and click **Login**.

c. On the homepage, choose **Monitoring** > **Control**, and click **Inv. OFF**. In the displayed dialog box, click **OK** to shut down the inverter.

Figure 5-17 Shutting down the inverter

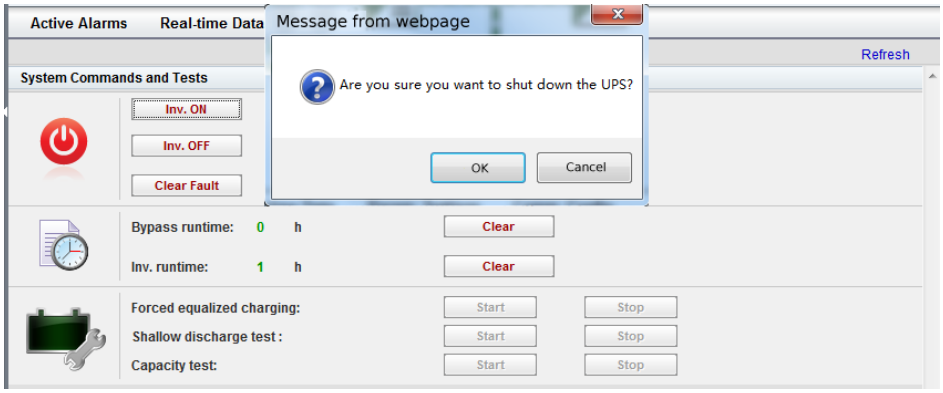

After the inverter shuts down, the UPS works in bypass mode if the bypass is normal, as shown in Figure 5-18; the UPS supplies no power and the loads power off if the bypass is abnormal, as shown in Figure 5-19.

Figure 5-18 Normal bypass

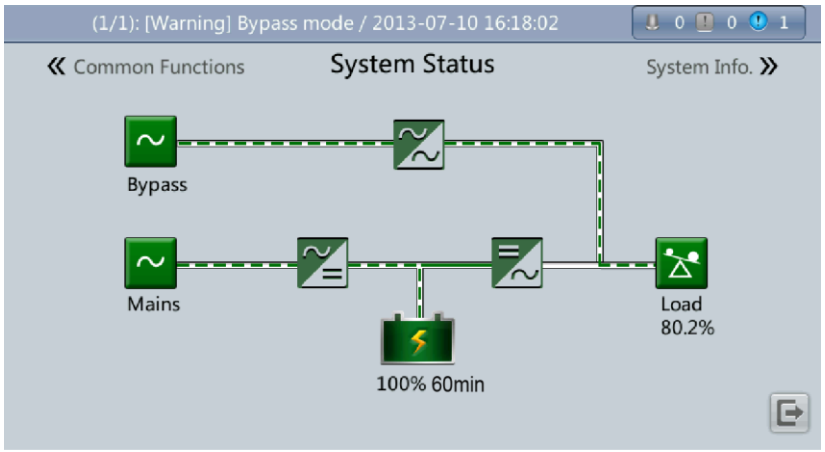

NOTE

After you shut down the inverter, the **Bypass mode** alarm is displayed on the LCD.

Copyright © Huawei Technologies Co., Ltd.

Figure 5-19 Abnormal bypass

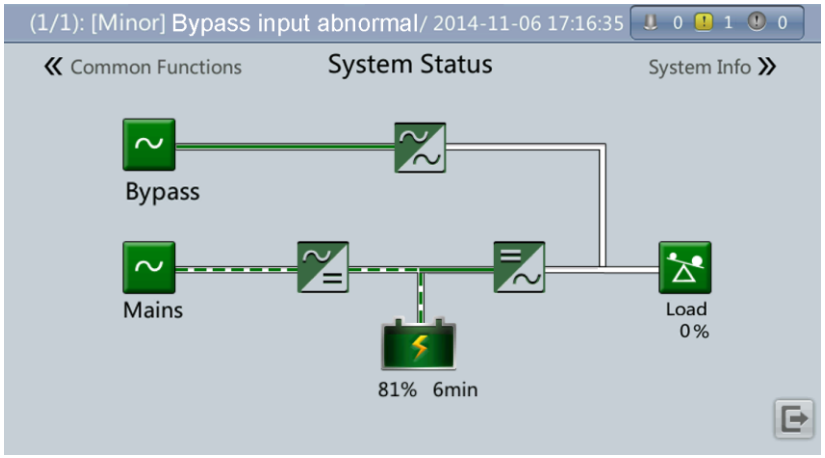

NOTE

- If you need to shut down the inverter and transfer the UPS to bypass mode, check that the UPS has not generated an alarm and perform Step 1.
- To power off the entire UPS, perform all the following steps.

Step 2 After the inverter shuts down, open the external output switches.

Step 3 Open the battery string circuit breaker. If there are multiple battery strings, open the general circuit breaker between battery strings and the UPS and then open the circuit breaker for each battery string.

Step 4 For a UPS in full configuration:

1. Open the internal mains input switch, bypass input switch, and output switch.
2. Open the external mains and bypass input switches.

Step 5 For a UPS in standard configuration, open the external mains and bypass input switches.

----End

5.3 Starting the UPS in Battery Mode

Procedure

Step 1 Ensure that batteries are properly connected. Use a multimeter to check that the sum of the absolute voltages of positive and negative battery strings are greater than a certain value (2 x Number of cells).

Step 2 Open the mains and bypass input circuit breakers. If the mains and bypass have no input, close the battery circuit breaker. If there are multiple battery strings, close the circuit breaker for each battery string and then the general circuit breaker between battery strings and the UPS.

Step 3 Measure the UPS battery string voltages in the battery input route by using a multimeter. If the sum of the absolute voltages of positive and negative battery strings are greater than a certain value (2 x Number of cells), the batteries are connected properly.

Copyright © Huawei Technologies Co., Ltd.

Step 4 Press and hold down the **BATT start** button on the bypass module for at least 2 seconds. Figure 5-20 shows the position of the battery cold start button. The system automatically enters the battery cold start status. The LCD displays the Huawei logo and an initialization progress bar.

Figure 5-20 Battery startup button

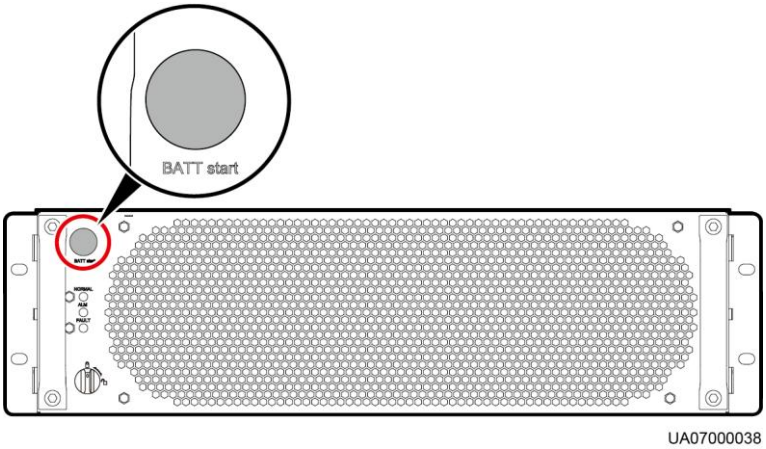

Step 5 After LCD initialization, start the inverter by following Step 4 and Step 5 in section 5.1 Powering On and Starting the UPS.

----End

5.4 Transferring to Bypass Mode

NOTICE

Before shutting down the inverter, ensure that the bypass is normal. If the bypass is not normal, after the inverter is shut down, the UPS supplies no power, and the loads shut down.

Perform Step 1 in section 5.2 Shutting Down and Powering Off the UPS to shut down the inverter over the LCD or WebUI. After the inverter is shut down, the UPS transfers to bypass mode.

NOTE

If the inverter is shut down when the input voltage or frequency exceeds the specified threshold, the UPS supplies no power, and the loads shut down.

5.5 Setting ECO Mode

Context

- The UPS is set to non-ECO mode by default. Set the UPS to ECO mode when energy saving is required.

Copyright © Huawei Technologies Co., Ltd.

- When the UPS works in ECO mode, the bypass module takes precedence over the power module in supplying power to loads. When the bypass module is disconnected, the UPS switches to the power module. The switchover time is less than 4 ms for typical working conditions and is 20 ms under harsh working conditions.
- Both a single UPS and the parallel system support the ECO mode for higher efficiency.
- To avoid frequent transfer between ECO mode and normal mode, do not set the ECO mode when the bypass input is unstable or is sensitive to load changes.
- ECO mode is not recommended when the load is less than 10%.
- Before transferring the UPS to ECO mode, ensure that the bypass module works properly.

Procedure

Step 1 Manually shut down the inverter to transfer the UPS to bypass mode. For details, see Step 1 in 5.2 Shutting Down and Powering Off the UPS.

Step 2 Select a value (**±5%**, **±6%**, **±7%**, **±8%**, **±9%**, or **±10%**) from the **ECO voltage range** drop-down list box.

Figure 5-21 Setting ECO voltage range

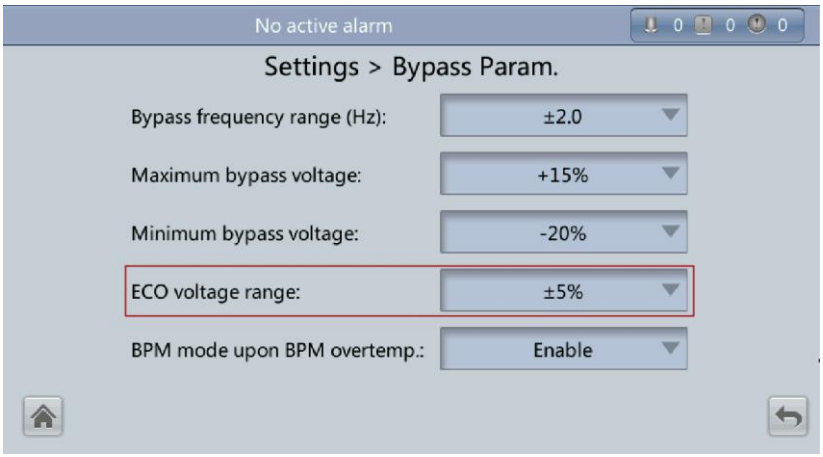

Step 3 Set **Working mode** to **ECO**. Information indicating that the UPS works in ECO mode is displayed on the LCD.

Copyright © Huawei Technologies Co., Ltd.

Figure 5-22 Setting ECO mode

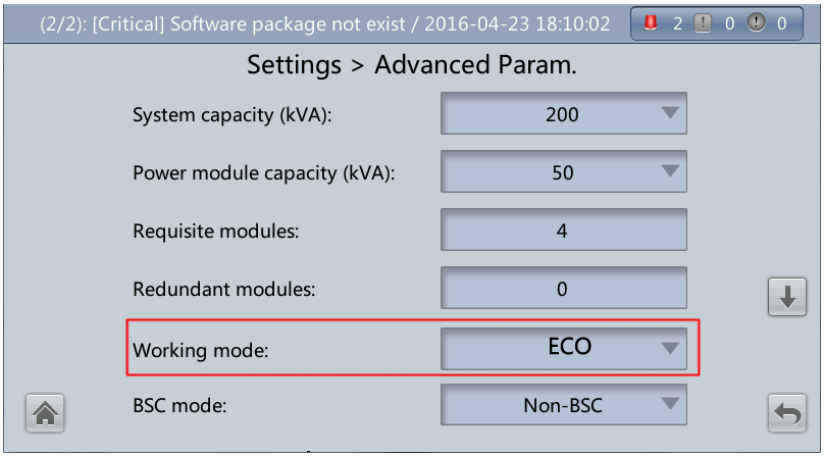

Step 4 Manually start the inverter.

NOTICE

After the inverter starts, the UPS still works in bypass mode and the inverter is on standby. Figure 5-23 shows the power flow displayed on the **System Status** screen. If the bypass is not normal, the inverter supplies power immediately. If the inverter is not started, the UPS may be disconnected.

Figure 5-23 System Status screen

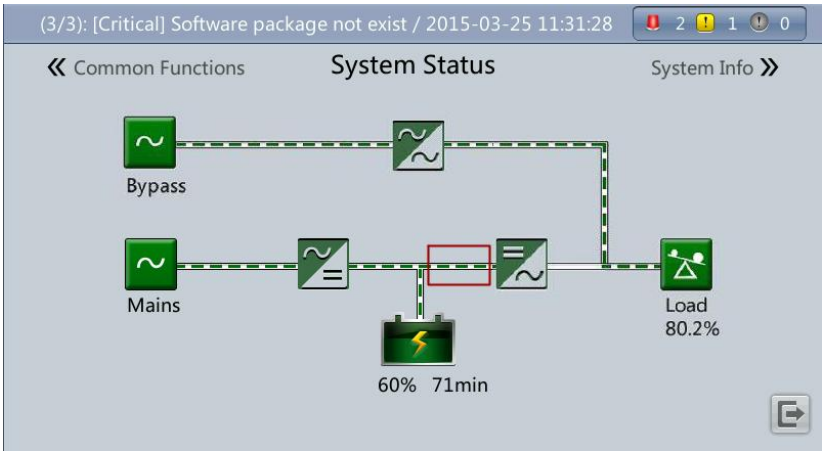

----End

Copyright © Huawei Technologies Co., Ltd.

5.6 Testing Batteries

5.6.1 Forced Equalized Charging Test

Context

NOTICE

Before a forced equalized charging test, ensure that:

- The mains input is normal.
- Batteries are properly connected.
- Batteries are not in the equalized charging state.

Procedure

Step 1 On the main screen of the LCD, tap **System Info**. Tap . The **Maintenance** screen is displayed.

Step 2 (Optional) If no user is logged in, enter a user name and a password, and then tap .

NOTE

- For details about default user names, preset passwords, and user rights, see Table 4-5.
- If an incorrect password is entered three consecutive times, the account will be logged out for 5 minutes.

Step 3 On the **Maintenance** screen, tap **Battery Maint.**, as shown in Figure 5-24.

Figure 5-24 Maintenance screen

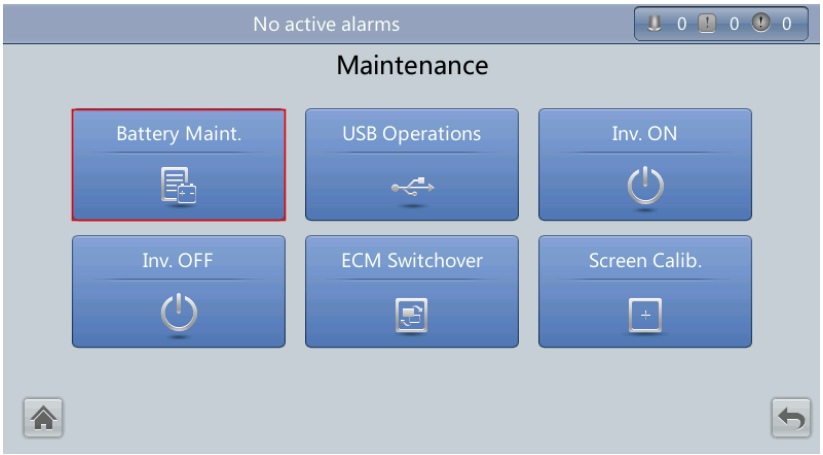

Step 4 Tap **Start** next to **Forced Equalized Charging** to start a forced equalized charging test, as shown in Figure 5-25.

Copyright © Huawei Technologies Co., Ltd.

Figure 5-25 Starting a forced equalized charging test

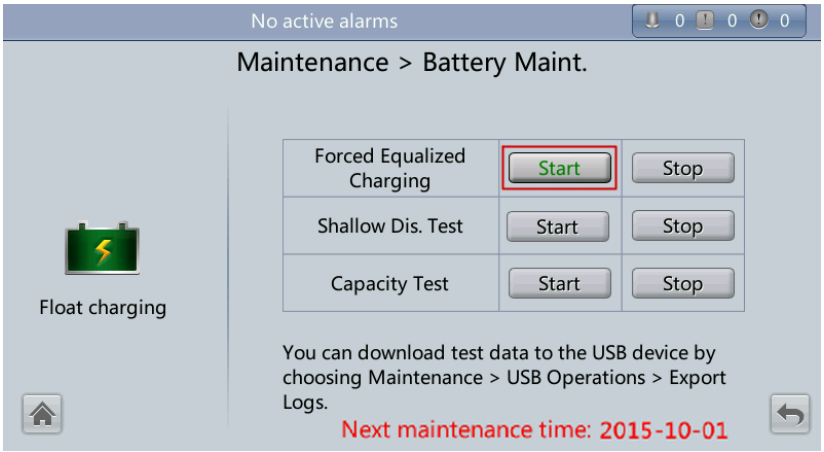

NOTE

Tap **Stop** next to **Forced Equalized Charging** in any of the following cases:

- The forced equalized charging test duration reaches the forced equalized charging protection time (12–24 h, 18 h by default).
- The UPS generates a battery overtemperature, overvoltage, or overcurrent alarm.
- An alarm is generated.

----End

5.6.2 Shallow Discharge Test

Context

NOTICE

Before a shallow discharge test, ensure that:

- The UPS works in normal mode with a load ratio fluctuation less than 10%.
- The UPS has generated no battery overtemperature, overvoltage, or overcurrent alarm. No generator is connected to the UPS.
- The mains, batteries, charger, and discharger are normal. No overload alarm is generated.

Procedure

Step 1 On the main screen of the LCD, tap **System Info**. Tap . The **Maintenance** screen is displayed.

Step 2 (Optional) If no user is logged in, enter a user name and a password, and then tap .

NOTE

- For details about default user names, preset passwords, and user rights, see Table 4-5.

Copyright © Huawei Technologies Co., Ltd.

- If an incorrect password is entered three consecutive times, the account will be logged out for 5 minutes.

Step 3 On the **Maintenance** screen, tap **Battery Maint.**, as shown in Figure 5-24.

Step 4 Tap **Start** on the right of **Shallow Dis. Test** to start a shallow discharge test, as shown in Figure 5-26.

Figure 5-26 Starting a shallow discharge test

NOTE

When the battery test is complete, the test data is used as common test data. Record the data obtained from the latest five tests.

Tap **Stop** next to **Shallow Dis. Test** in any of the following cases:

- The battery discharge capacity reaches the specified value (10%–50%, 20% by default).
- The discharge voltage reaches the warning threshold (calculated in real time).
- The load ratio fluctuation exceeds 10%.
- An alarm is generated.

----End

5.6.3 Capacity Test

Context

NOTICE

Before a capacity test, ensure that:

Copyright © Huawei Technologies Co., Ltd.

- The UPS is working in normal mode; float charging or hibernation has lasted for 2 hours after the state of charge (SOC) reaches 100%; and the load ratio fluctuation is less than 10%.
- The UPS has generated no battery overtemperature, overvoltage, or overcurrent alarm. No generator is connected to the UPS.
- The mains, batteries, charger, and discharger are normal. No overload alarm is generated.

Procedure

Step 1 On the main screen of the LCD, tap **System Info**. Tap . The **Maintenance** screen is displayed.

Step 2 (Optional) If no user is logged in, enter a user name and a password, and then tap .

NOTE

- For details about default user names, preset passwords, and user rights, see Table 4-5.
- If an incorrect password is entered three consecutive times, the account will be logged out for 5 minutes.

Step 3 On the **Maintenance** screen, tap **Battery Maint.**, as shown in Figure 5-24.

Step 4 Tap **Start** next to **Capacity Test** to start a capacity test, as shown in Figure 5-27.

Figure 5-27 Starting a capacity test

NOTE

Tap **Stop** next to **Capacity Test** in any of the following cases:

- The battery discharge voltage reaches the end of discharge (EOD) voltage plus 0.01 V.
- The load fluctuation exceeds 10%.
- An alarm is generated.

When the battery discharge voltage reaches the EOD voltage plus 0.01 V, the test is complete. The test data is used as capacity test data. Save the capacity test data record with the largest discharge capacity in a month as the capacity test data for the month. A maximum of recent 36 capacity test records can be saved.

----End

Copyright © Huawei Technologies Co., Ltd.

5.6.4 Test Data Download

5.6.4.1 Download over the LCD

Procedure

Step 1 Insert a USB flash drive into the USB port on the MDU.

Step 2 On the main screen of the LCD, choose **System Info**. Tap . The **Maintenance** screen is displayed.

Step 3 (Optional) If no user is logged in, enter a user name and a password, and then tap .

NOTE

- For details about default user names, preset passwords, and user rights, see Table 4-5.
- If an incorrect password is entered three consecutive times, the account will be logged out for 5 minutes.

Step 4 Choose **USB Operations** > **Export Logs**, and select a log download path, as shown in Figure 5-28.

Figure 5-28 Downloading logs

Step 5 Tap **Next**. In the displayed dialog box, tap **Yes** to download data, as shown in Figure 5-29.

Copyright © Huawei Technologies Co., Ltd.

Figure 5-29 Confirming the path

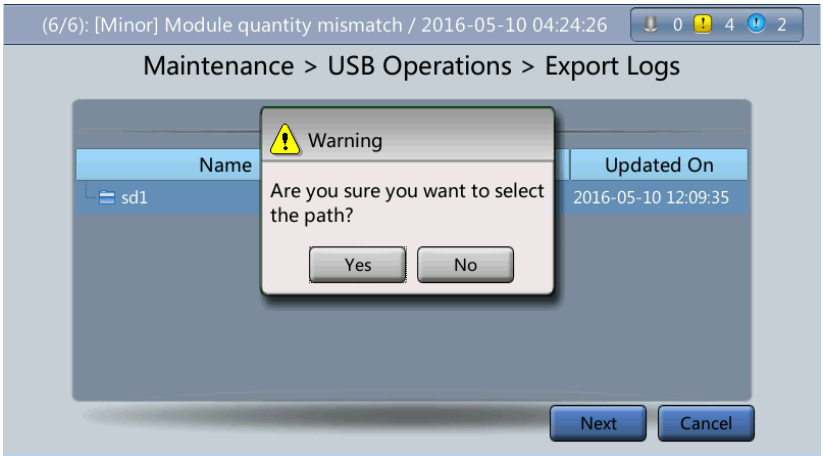

----End

5.6.4.2 Download over the WebUI

Procedure

Step 1 Log in to the WebUI.

Step 2 Choose **Query** > **Logs**, select **Cap. test logs** or **Common test logs** from the **Log** drop-down list box, then click **Export** to export logs, as shown in Figure 5-30 and Figure 5-31.

Figure 5-30 Capacity test logs

Figure 5-31 Common test logs

----End

Copyright © Huawei Technologies Co., Ltd.

5.7 Transferring to Maintenance Bypass Mode

Context

NOTICE

- Installing a lock on the maintenance bypass switch is advised. The lock core has a diameter of 5–10 mm.
- Strictly observe the following procedure to transfer the UPS to maintenance bypass mode. Otherwise, loads may power off.
- In maintenance bypass mode, the mains supplies power to the loads directly over the maintenance bypass. If the mains is not normal, the loads may power off.

Procedure

Step 1 Transfer the UPS to the bypass mode by referring to Step 1 in 5.2 Shutting Down and Powering Off the UPS.

Step 2 Close the maintenance bypass switch by performing the following actions according to the UPS version being used:

- For the UPS5000-E-200K-SM, rotate the handle clockwise 90 degrees (so that the handle points downwards) as shown in Figure 5-32.
- For the UPS5000-E-200K-FM, remove the barrier chip on the maintenance bypass switch and close the switch, as shown in Figure 5-33.
- For the UPS5000-E-300K-SM/SMT, rotate the handle clockwise 90 degrees (so that the handle points leftwards) as shown in Figure 5-34 (for the UPS5000-E-300K-SM) and Figure 5-35 (for the UPS5000-E-300K-SMT).

The **Maint. breaker closed** alarm is displayed in the alarm list, as shown in Figure 5-36. The UPS transfers to maintenance bypass mode.

Copyright © Huawei Technologies Co., Ltd.

Figure 5-32 Closing the maintenance bypass switch (UPS5000-E-200K-SM)

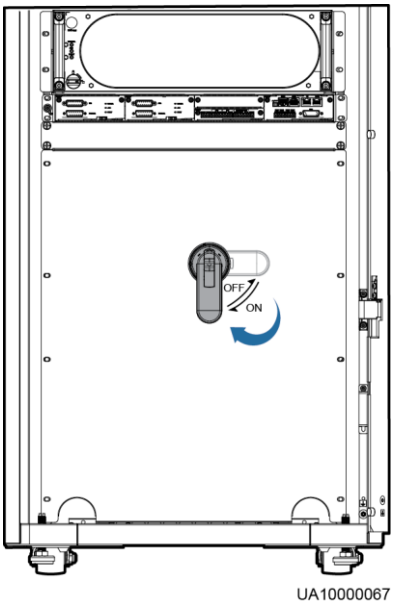

Figure 5-33 Closing the maintenance bypass switch (UPS5000-E-200K-FM)

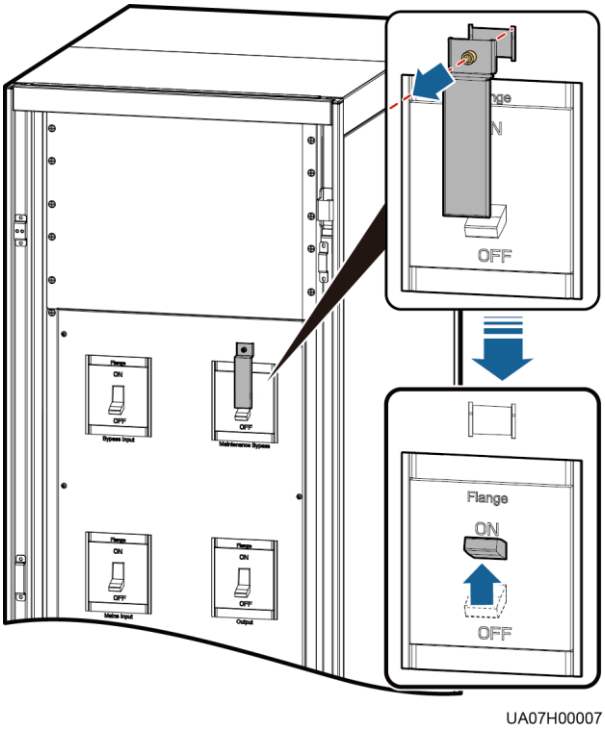

Copyright © Huawei Technologies Co., Ltd.

Figure 5-34 Closing the maintenance bypass switch (UPS5000-E-300K-SM)

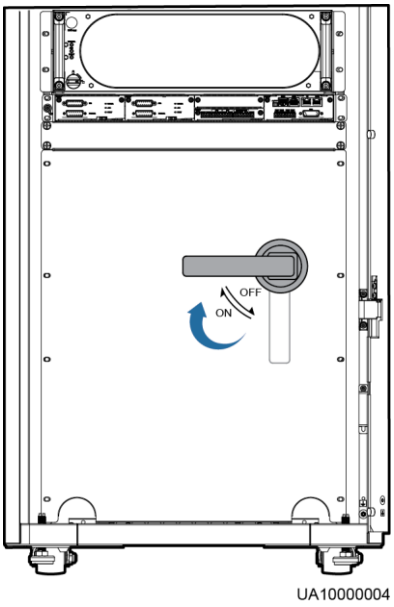

Figure 5-35 Closing the maintenance bypass switch (UPS5000-E-300K-SMT)

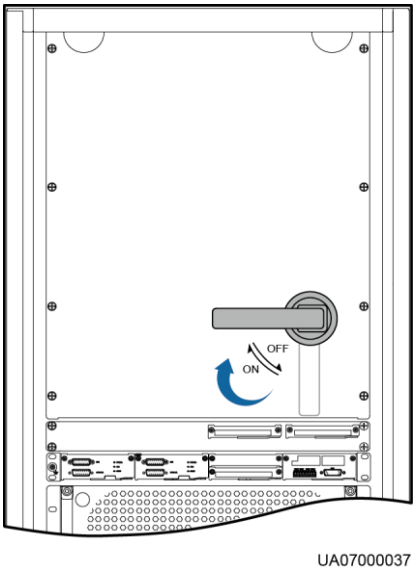

Copyright © Huawei Technologies Co., Ltd.

Figure 5-36 Maint. breaker closed alarm

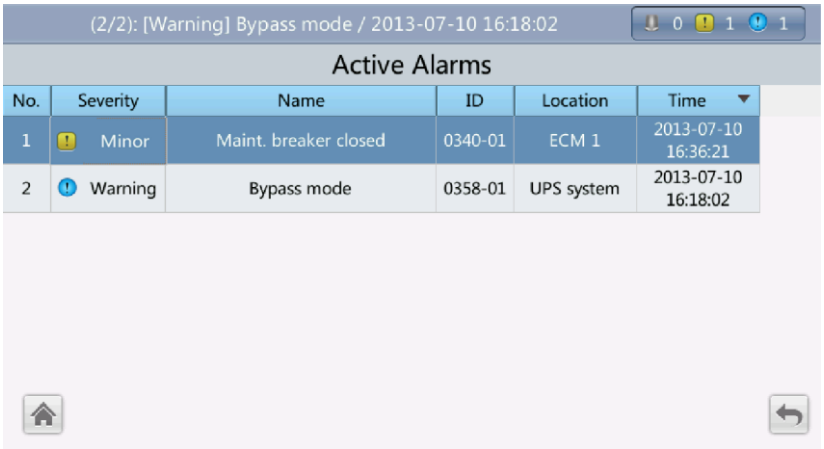

NOTE

After the UPS transfers to maintenance bypass mode, the **Maint. breaker closed** and **Bypass mode** alarms are displayed on the LCD.

----End

5.8 Transferring from Maintenance Bypass Mode to Normal Mode

Context

NOTICE

Before transferring the UPS from maintenance bypass mode to normal mode, ensure that the bypass input and output are normal.

Procedure

Step 1 Open the maintenance bypass switch by performing the following actions according to the UPS version being used:

- For the UPS5000-E-200K-SM, rotate the handle counterclockwise 90 degrees (so that it points rightwards), as shown in Figure 5-37.
- For the UPS5000-E-200K-FM, pull down the switch, as shown in Figure 5-38.
- For the UPS5000-E-300K-SM/SMT, rotate the handle counterclockwise 90 degrees (so that it points downwards).

The **Maint. Breaker closed** alarm disappears from the alarm list. Check whether the UPS works in bypass mode by viewing the system running status diagram on the LCD or WebUI.

Copyright © Huawei Technologies Co., Ltd.

Figure 5-37 Opening the maintenance bypass switch (UPS5000-E-200K-SM)

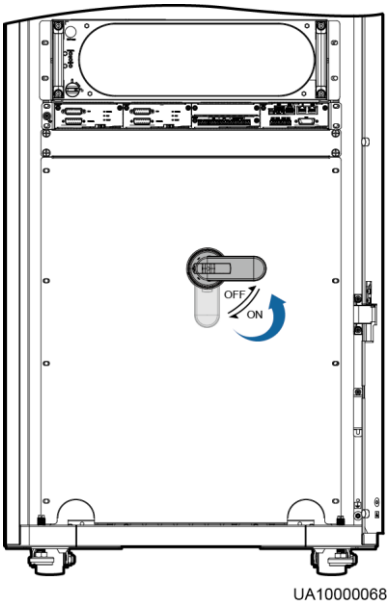

NOTE

Operations on the UPS5000-E-200K-SM and UPS5000-E-300K-SM/SMT are similar. The operation of the maintenance switch on the UPS5000-E-200K-SM is used as an example.

Figure 5-38 Opening the maintenance bypass switch (UPS5000-E-200K-FM)

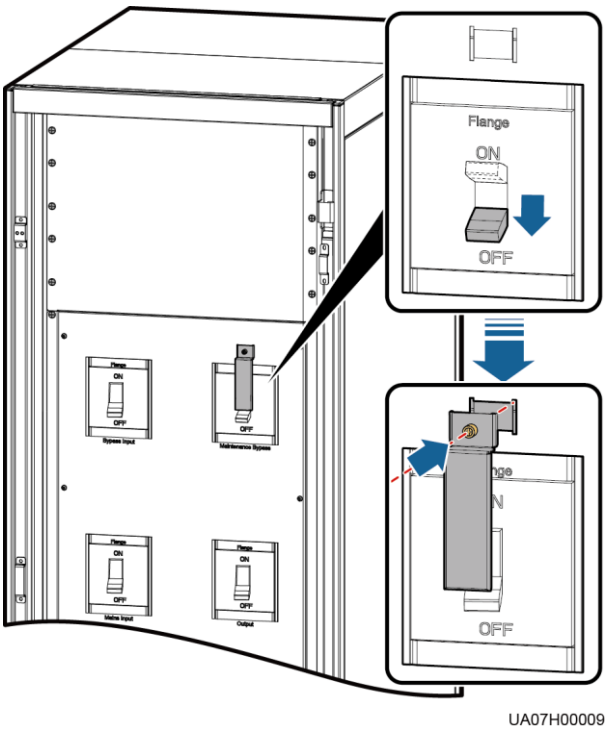

Step 2 Start UPS inverters. For details, see Step 4 to Step 5 in 5.1 Powering On and Starting the UPS.

Copyright © Huawei Technologies Co., Ltd.

----End

5.9 Performing EPO

NOTICE

- After the EPO button is turned on, the UPS supplies no power and the loads shut down.
- In maintenance bypass mode, the UPS continues to supply power even after the EPO button is turned on.

Press the EPO button connected to the dry contact card on the UPS or remove the 4-pin terminal from the EPO port on the dry contact card.

Figure 5-39 EPO ports

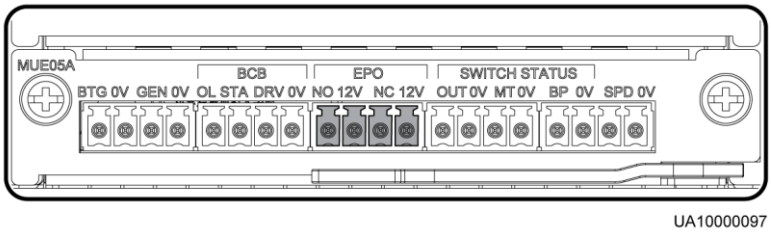

Figure 5-40 EPO alarm displayed on the LCD

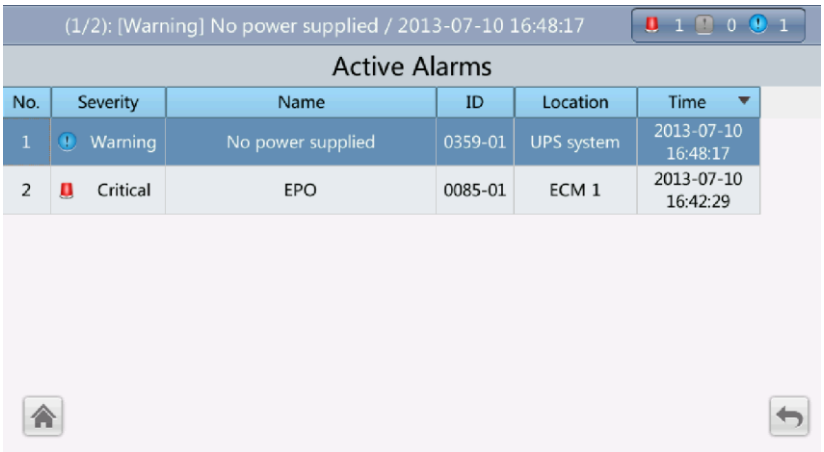

Copyright © Huawei Technologies Co., Ltd.

Figure 5-41 EPO alarm displayed on the WebUI

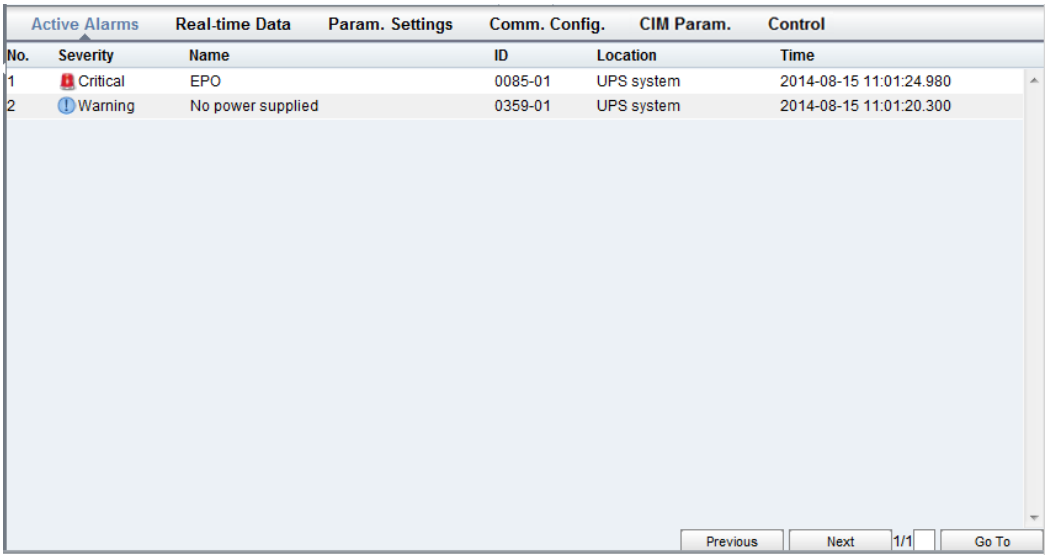

NOTE

After you press the EPO button, the **EPO** and **No power supplied** alarms are displayed on the LCD.

5.10 Clearing the EPO State

Procedure

Step 1 Clear the EPO state. Ensure that the EPO button connected to the dry contact card is not in the EPO state.

Step 2 Clear the EPO alarm.

- On the LCD

  On the LCD, choose **System Info** > **Alarms** and tap **Clear Faults**. If you have not logged in, a login screen is displayed. Enter a user name and password, and tap .

Copyright © Huawei Technologies Co., Ltd.

Figure 5-42 Alarms

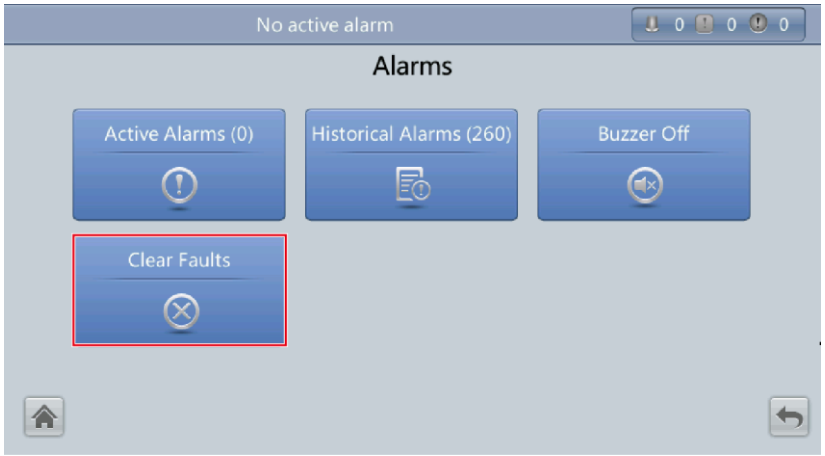

In the displayed dialog box, tap **Yes**. The EPO alarm is cleared successfully.

Figure 5-43 Clearing faults

- On the WebUI

  In a web browser, enter the UPS IP address and select a display language. Enter a user name and password, and click **Login** to open the homepage. Choose **Monitoring** > **Control** > **System Commands and Tests** and click **Clear Fault**. The EPO alarm is cleared successfully.

Copyright © Huawei Technologies Co., Ltd.

Figure 5-44 Clearing faults

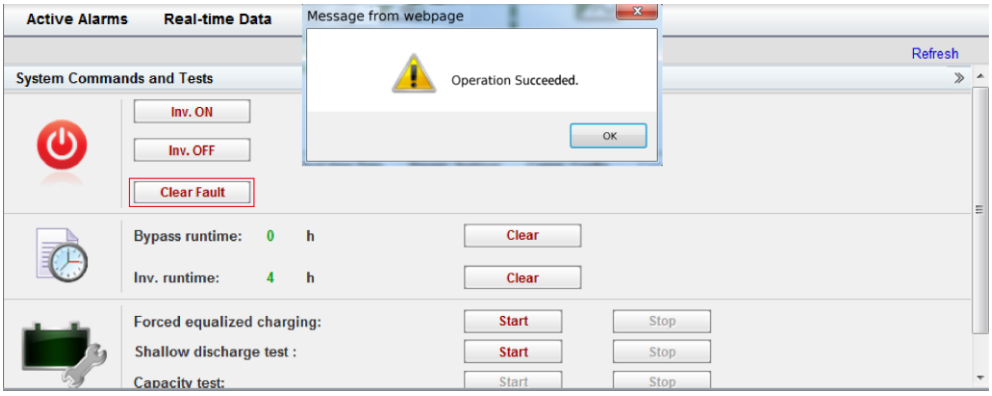

Step 3 Check that the EPO alarm is cleared by viewing active alarms. If the system bypass input is normal, the UPS transfers to bypass mode.

- Viewing active alarms on the LCD

  Choose **System Info** > **Alarms** and tap **Active Alarms** to check that the EPO alarm is cleared.

Figure 5-45 Active alarms

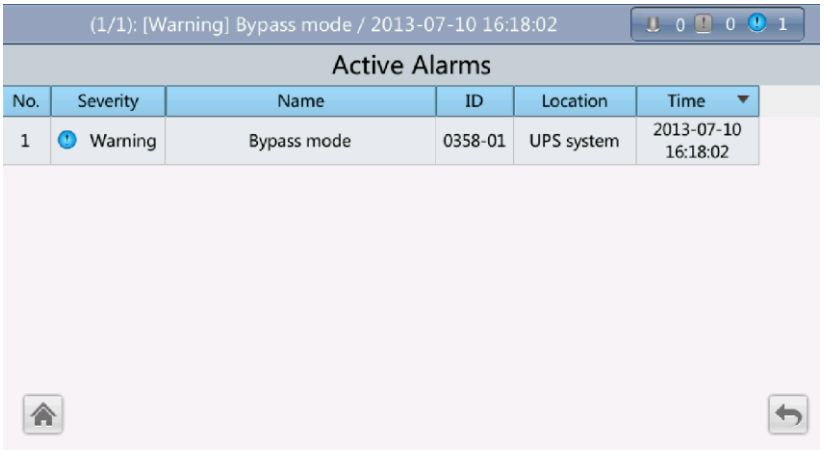

- Viewing active alarms on the WebUI

  In a web browser, enter the UPS IP address and select a display language. Enter a user name and password, and click **Login** to open the homepage. Choose **Monitoring** > **Active Alarms** to check that the EPO alarm is cleared. If the bypass input is normal, the UPS transfers to bypass mode.

Copyright © Huawei Technologies Co., Ltd.

Figure 5-46 Active alarms

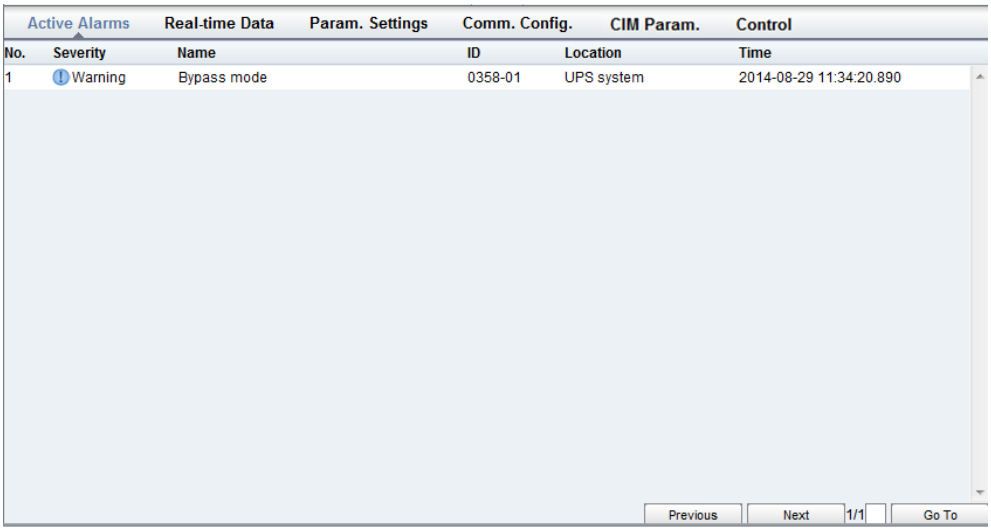

Step 4 Start the inverter. For details, see the section "Powering On and Starting the UPS".

----End

5.11 Exporting Data

Prerequisites

You have logged in to the WebUI.

Context

The following data can be exported:

- Historical alarms
- Logs
- E-Label
- CIM version
- Serviceable data

NOTE

This topic describes how to export historical alarms.

Procedure

Step 1 Choose **Query** > **Historical Alarms**, and set **Severity**, **Generated**, and **Cleared**.

Copyright © Huawei Technologies Co., Ltd.

Figure 5-47 Querying historical alarms

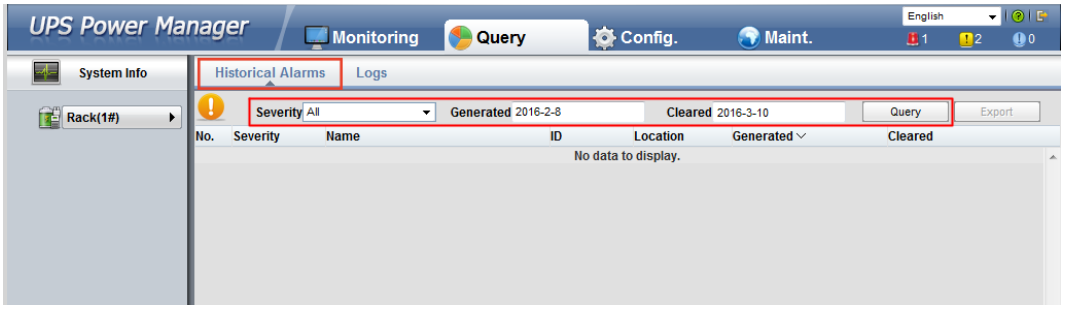

NOTE

You do not need to query logs. Choose **Query** > **Logs**, click **Export**, and save the file.

Step 2 Click **Query**, and you can see the corresponding historical alarms.

Figure 5-48 Exporting historical alarms

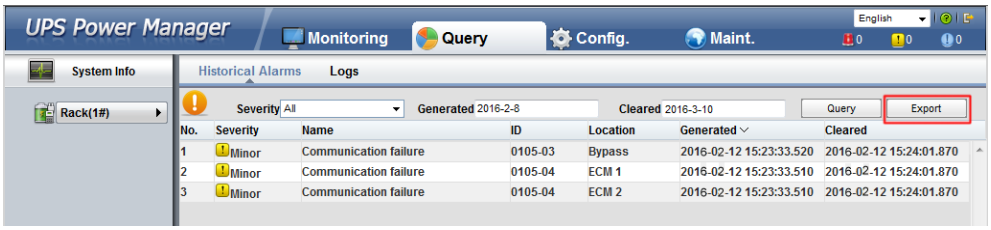

Step 3 Click **Export** and save the displayed webpage.

----End

5.12 Setting Hibernation Mode

When the load power is small and stable, the inverters in some power modules shut down so that these power modules enter hibernation state and the other power modules bear all the load power. This improves the system efficiency, reduces power consumption, and increases the power module service life.

Copyright © Huawei Technologies Co., Ltd.

NOTICE

- Before you start hibernation mode, ensure that the load power is stable. When the system load power fluctuation is greater than the rated capacity of half a module (for example, the single-phase load fluctuation is greater than 8.33 kVA for a 50 kVA module), the UPS may enter and exit from hibernation mode repeatedly.
- Before you start hibernation mode, check that the number of redundant power modules and racks are appropriate. If the number is insufficient, the UPS may not enter hibernation mode.

You can set hibernation mode on the LCD or WebUI.

5.12.1 LCD

Procedure

Step 1 On the main screen, tap **System Info** and . The **Settings** screen is displayed.

NOTE

If you have not logged in, enter a user name and password, and tap on the login screen displayed.

Step 2 Tap **Advanced Param.**. Tap or to browse the parameters, as shown in Figure 5-49.

Figure 5-49 Hibernation parameters on the LCD

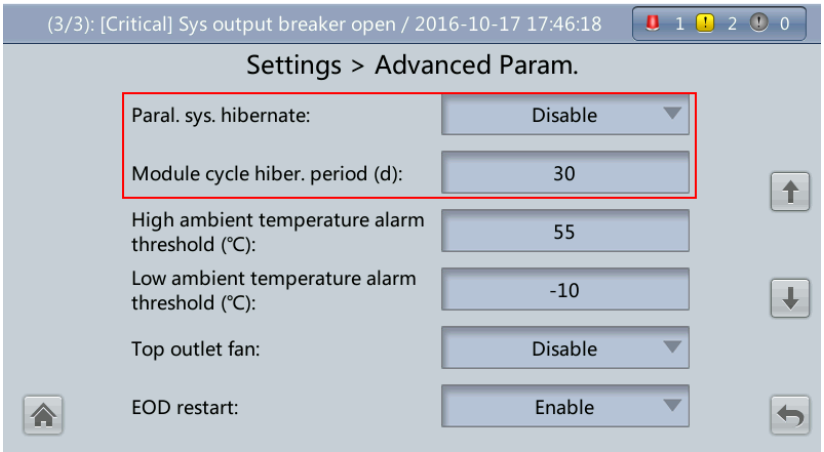

Step 3 On the LCD, set **Paral. sys. hibernate** to **Enable**. A confirmation message is displayed, as shown in Figure 5-50.

Copyright © Huawei Technologies Co., Ltd.

Figure 5-50 Confirmation message

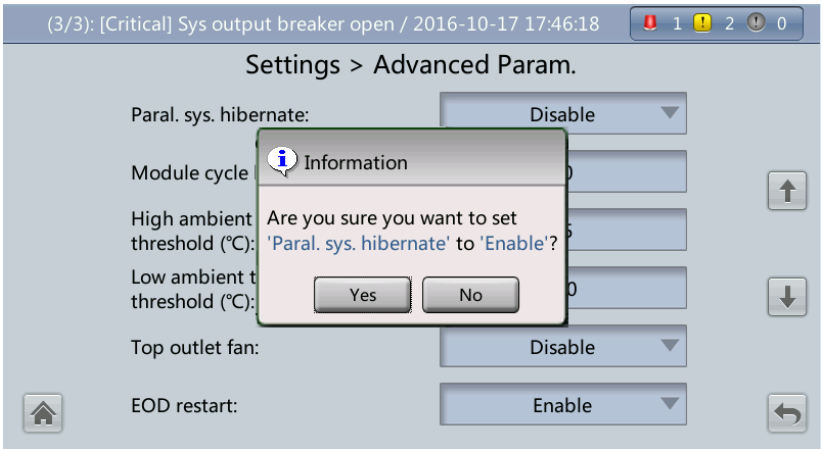

Step 4 Tap **Yes**. A message is displayed, indicating that the hibernation function is set successfully.

Step 5 Set **Module cycle hiber. period (d)** to an integer ranging from **1** to **100**. The default value is **30**.

----End

5.12.2 WebUI

Procedure

Step 1 On the login page, enter a user name and password, and click **Login**.

Step 2 Choose **Monitoring** > **Param. Settings** > **Advanced Param.**, as shown in Figure 5-51.

Figure 5-51 Hibernation parameters on the WebUI

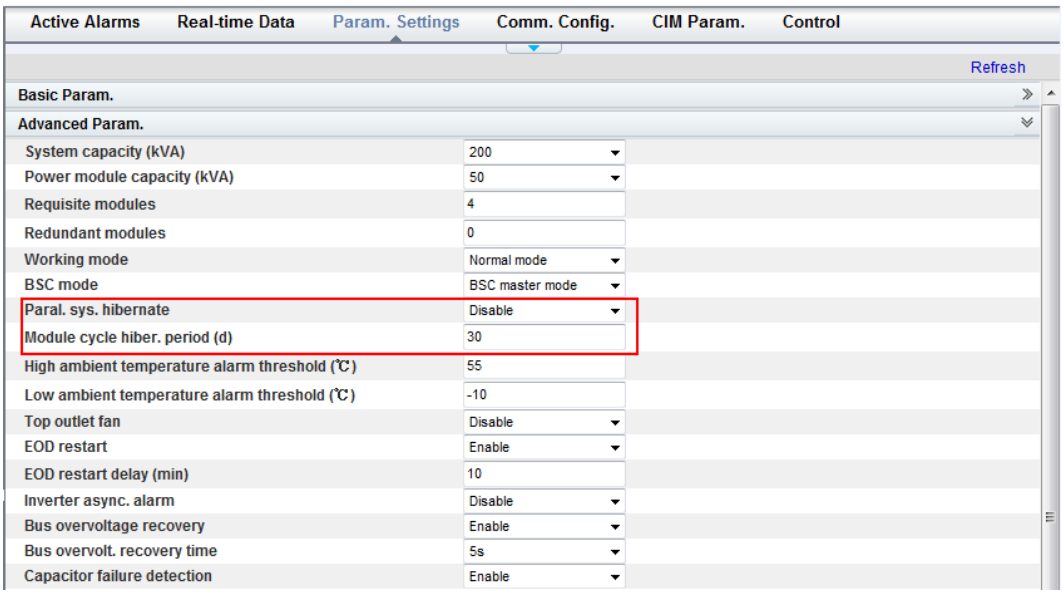

Copyright © Huawei Technologies Co., Ltd.

Step 3 On the WebUI, set **Paral. sys. hibernate** to **Enable**, and click **Submit**.

NOTE

Click **Submit** after you set the parameter on the WebUI.

Step 4 Set **Module cycle hiber. period (d)** to an integer ranging from **1** to **100**. The default value is **30**.

----End

Copyright © Huawei Technologies Co., Ltd.

6 Routine Maintenance

6.1 UPS Maintenance

NOTICE

- Only trained personnel are allowed to perform maintenance. Before performing operations on the UPS, wear electrostatic discharge (ESD) clothes, ESD gloves, and an ESD wrist strap. Remove conductive objects such as jewelry or watches during operations to avoid electric shocks or burns.
- Use insulated tools when maintaining internal devices. Only trained personnel are allowed to perform maintenance. Customers are not allowed to maintain components behind protective covers that can be removed only using tools. If the components are to be maintained, contact Huawei technical support.
- Only maintenance engineers can maintain power modules and bypass modules.
- Maintain UPSs regularly based on the following requirements. Otherwise, the UPSs may fail to operate properly and the service life may be shortened.

6.1.1 Monthly Maintenance

Table 6-1 Monthly maintenance

Check Item	Expected Result	Troubleshooting
Operating environment	• Ambient temperature: 0–40 ℃ • Humidity: 0–95% RH (non-condensing) • Rodent-proof measures have been taken for the equipment room. • The equipment room is airtight.	• If the humidity or temperature is abnormal, check the air conditioner status. • Put rodent-proof baffle plates at the door of the UPS equipment room. • Check that the equipment room is airtight and not in a direct ventilation environment.
Power grid environment	• Input voltage: 380 V AC, 400 V AC, or 415 V AC (line	• If the input voltage is abnormal, check the power grid

Copyright © Huawei Technologies Co., Ltd.

Check Item	Expected Result	Troubleshooting
	voltage) • Output voltage: 380 V AC, 400 V AC, or 415 V AC (tolerance ±1%, line voltage) • Frequency: 40–70 Hz	status and input cable connection. • If the output voltage is abnormal, check the UPS running status and check whether an alarm is generated.
Information on the LCD	The status icons on the LCD indicate that all units are operating properly, all operating parameters are within their normal ranges, and no fault or alarm information is displayed.	If an alarm is generated, rectify the fault by checking the device status and parameters.

6.1.2 Quarterly Maintenance

Table 6-2 Quarterly maintenance

Check Item	Expected Result	Troubleshooting
Cleanliness	Wipe the cabinet surface using a white paper and the paper does not turn black.	Remove the dust, especially from the air filter on the front door, or replace the air filter.
Parameter configuration	The configuration of the output voltage grade, frequency, number of batteries, and battery capacity meets requirements.	Reset the parameters.
Status record	Record the three-phase load rate and output power factor.	If an exception occurs, check the load status.
Shallow discharge test (recommended)	Conduct a shallow discharge test when the UPS is backed up to verify that the batteries can discharge normally.	If an alarm is generated, refer to the alarm list.

6.1.3 Annual Maintenance

Table 6-3 Annual maintenance

Check Item	Expected Result	Troubleshooting
Grounding	Check that the ground cables are connected securely.	Tighten the screws.
Power cables and terminals (between the UPS and the	The insulation layer of cables is intact and terminals are free from black marks	• Replace the cables. • Secure the output

Copyright © Huawei Technologies Co., Ltd.

Check Item	Expected Result	Troubleshooting
power distribution cabinet)	and noticeable sparks.	terminals.
Cable circuit breaker through-current capacity	The circuit breakers and cables meet load requirements. The actual cable through-current capacity is greater than the circuit breaker specifications.	• Replace the circuit breaker. • Replace the cable.

To prevent system failures caused by the deterioration of some key UPS components, you are advised to check the key components on a regular basis and replace them within the service life. Table 6-4 lists the service life parameters for key components and recommended replacement intervals.

Table 6-4 Service life parameters for replaceable components and recommended replacement intervals

Key Component	Design Service Life	Recommended Replacement Interval
Power module	15 years	10 years
Bypass module	15 years	10 years
Fan	15 years	10 years
LCD screen	10 years	8 years

6.2 Battery Maintenance

NOTICE

Before installing batteries, read through the battery user manuals and pay attention to safety precautions and connection methods provided by battery manufacture.

When installing and maintaining batteries, pay attention to the following points:

Copyright © Huawei Technologies Co., Ltd.

- Wrap tools with insulation tape to prevent electric shock.
- Protect your eyes with relevant devices and apply other protective measures.
- Wear rubber gloves and a protective coat in case of electrolyte overflow.
- When moving batteries, avoid handling the battery upside down, handle batteries gently, and pay attention to personal safety.
- Keep the battery switch off when installing or maintaining the batteries.

6.2.1 Precautions for Battery Maintenance

- Before battery maintenance, get the tools, such as handles, insulated. Do not place other objects on the top of batteries.
- Never use any organic solvent to clean batteries.
- Never try to remove the safety valve or pour anything into batteries.
- Never smoke or have an open flame around batteries.
- After battery discharge, charge the battery in time to maintain a good service life.
- Only professionals are allowed to perform the maintenance tasks.

6.2.2 Monthly Maintenance

Table 6-5 Monthly maintenance

Item	Expected Result	Troubleshooting
Battery management alarm	No battery management alarm is generated.	Identify the cause of an alarm based on the alarm information.
Battery appearance	1. The surface is clean and tidy without stains. 2. The battery terminals are intact. 3. Batteries are free from damage and cracks. 4. Batteries are free from acid leakage. 5. Batteries are not deformed or bulged.	If the battery appearance is abnormal, contact Huawei technical support.
Battery operating temperature	1. The ambient battery temperature is 25±5 ℃. 2. The battery operating temperature is lower than battery temperature +20 ℃. 3. Battery charge and discharge conditions meet the requirements specified in the battery specifications.	1. Identify the cause of an abnormal battery operating temperature. 2. If the fault persists, contact Huawei technical support.
Charge voltage of battery string	• Equalized charging voltage: 2.35 V/cell ±1% x number of battery cells	1. If the voltage drop between the battery string output terminals and the battery input terminals at the UPS side is greater than

Copyright © Huawei Technologies Co., Ltd.

Item	Expected Result	Troubleshooting
	• Float charging voltage: 2.25 V/cell ±1% x number of battery cells	1% of the battery string voltage, check whether the cable between the battery string and the UPS is excessively long, or the cable diameter is excessively small. 2. Check whether the equalized charging voltage and float charging voltage are correctly set for the UPS. 3. If the fault persists, contact Huawei technical support.

6.2.3 Quarterly Maintenance

Table 6-6 Quarterly maintenance

Item	Expected Result	Troubleshooting
Battery temperature sensor measurement accuracy	The difference between the temperature measured by the temperature sensor and the temperature displayed on the MDU is less than 3 ℃.	1. Install the temperature sensor in the correct position. 2. Replace the battery temperature sensor.
Battery management parameter settings	The settings of battery management parameters meet the requirements in the user manual.	Set parameters correctly.
Tightness of battery screws	The location of the signs marked on battery terminals indicating tight connections does not change.	Take photos from multiple angles and contact Huawei technical support.
Cables between batteries	No cable deteriorates and the insulation layer does not crack.	Replace the faulty cable.
Battery voltage	• Equalized charging voltage: 2.35 V/cell ± 0.02 V/cell • Float charging voltage: 2.25 V/cell ±0.02 V/cell	1. Check whether the equalized charging voltage and float charging voltage of a battery are normal. 2. If the charging voltage of a battery exceeds the specifications requirement, perform a complete forcible equalized charging for the battery, and check again whether the voltage is normal. 3. If the fault persists, contact

Copyright © Huawei Technologies Co., Ltd.

Item	Expected Result	Troubleshooting
		Huawei technical support.
Shallow discharge test (recommended)	Conduct a shallow discharge test when the UPS is backed up to verify that the batteries can discharge normally.	1. If the batteries cannot discharge normally, locate the fault (for abnormal alarms, see the alarm list). 2. If the fault persists, contact Huawei technical support.

6.2.4 Annual Maintenance

Table 6-7 Annual maintenance

Item	Expected Result	Troubleshooting
Capacity Test	When the UPS is backed up, discharge a battery to the undervoltage alarm threshold, to refresh the capacity of the battery.	1. Locate the cause when an exception is identified. 2. If the fault persists, contact Huawei technical support.
Battery connection reliability	1. Each battery terminal is connected reliably. (When battery strings are powered off, check the reliability of each terminal in the order from positive terminals to negative terminals.) 2. The tightening torque of each battery screw meets the requirements of the battery manufacturer. (A torque wrench is used for checking the torque. After checking that the battery screws meet the requirements, mark the screws for later check.)	1. Rectify any abnormal connection. 2. If the fault persists, contact Huawei technical support.

Copyright © Huawei Technologies Co., Ltd.

7 Troubleshooting

CAUTION

If the UPS is faulty, alarm information is displayed on the LCD. Clear critical alarms before powering on the UPS again. Otherwise, the fault scope expands or the UPS is damaged.

NOTICE

- After a UPS finishes troubleshooting and is started, if the LCD continues displaying alarm information, choose **System Info** > **Alarms** > **Clear Faults** to clear the alarm and then start the inverter.
- When batteries reach EOD, the battery switch in the BCB box trips if the BCB box is configured. To restore battery discharge, close the battery switch in the BCB box (if any) first.
- To restore battery discharge after batteries reach EOD, use one of the following methods: 1. Switch to another battery string. Ensure that each battery has a voltage greater than the EOD voltage and 11.3 V/cell. 2. Restore the mains power supply to start the inverter. Close the battery switch and charge batteries until each battery has a voltage greater than the EOD voltage and 11.3 V/cell.

For details about how to rectify common faults, see Table 7-1. If any unmentioned faults occur, see the alarm list chapter, or contact Huawei technical support.

Table 7-1 Troubleshooting

Case	Symptom	Possible Cause	Measure
The rectifier is not normal.	The rectifier is not working, and the bus voltage is not boosted.	The mains voltage exceeds the upper threshold 280 V or is less than the lower threshold 80 V.	Check whether the mains voltage exceeds the threshold. If yes, contact the electric power company.
		PFC soft-startup fails.	Replace the power

Copyright © Huawei Technologies Co., Ltd.

Case	Symptom	Possible Cause	Measure
			module.
		The power module is faulty.	Replace the power module.
The inverter is not normal.	The buzzer is activated, the Fault indicator is on, the inverter is faulty, and the UPS transfers to bypass mode.	The UPS is overloaded or short-circuited.	Reduce load or rectify short circuits.
		Inverter overtemperature occurs.	Install more air conditioners or ventilation devices to ensure normal temperatures inside the equipment room.
		The power module is faulty.	Replace the power module.
The charger generates an alarm.	The buzzer is activated, the Fault indicator is on, and the charging function fails.	The charger fails.	Replace the power module.
		The charger experiences overcurrent.	Replace the power module.
		The charger experiences undervoltage.	Check whether the configured number of batteries is correct. If the value is correct but the alarm persists, replace the power module.
The UPS works in bypass mode and does not transfer to inverter mode.	When the mains is normal, the UPS works in bypass mode and does not transfer to inverter mode.	Set the UPS working mode to ECO mode.	Set the working mode correctly.
		The bypass transfer times reach the upper threshold.	Clear the bypass transfer times on the LCD.
The bypass is not normal.	The buzzer is activated, and the Fault indicator is on.	The bypass thyristor is damaged.	Replace the bypass module.
		The bypass module experiences overtemperature.	Reduce the load, or improve ventilation.

NOTE

For details about component replacement and maintenance involved in Troubleshooting and Alarm List, consult Huawei maintenance engineers.

Copyright © Huawei Technologies Co., Ltd.

8 Technical Specifications

8.1 Physical Specifications

Item	UPS5000-E-200K-SM	UPS5000-E-300K-SM	UPS5000-E-200K-FM	UPS5000-E-300K-SMT
Cabling mode	Cables are routed from the top or bottom.	Cables are routed from the bottom.	Cables are routed from the top.	Cables are routed from the top.
Protection level	IP20 (IP21 requires the configuration of IP21 components.)		IP20	
Dimensions (H x W x D)	2000 mm x 600 mm x 850 mm			
Communication	Dry contacts, RS485, and SNMP			
Weight	The product weighs 320 kg. Each power module is 32 kg. A maximum of four power modules are supported.	The product weighs 410 kg. Each power module is 32 kg. A maximum of six power modules are supported.	The product weighs 350 kg. Each power module is 32 kg. A maximum of four power modules are supported.	The product weighs 410 kg. Each power module is 32 kg. A maximum of six power modules are supported.

8.2 Internal Switch Parameters

UPS	Maintenance bypass switch	Mains input switch	Bypass input switch	Output switch
UPS5000-E-20	1000 V AC/400	N/A	N/A	N/A

Copyright © Huawei Technologies Co., Ltd.

UPS	Maintenance bypass switch	Mains input switch	Bypass input switch	Output switch
0K-SM	A/3P			
UPS5000-E-200K-FM	690 V AC/400 A/3P/MCCB	690 V AC/400 A/3P/MCCB	690 V AC/400 A/3P/MCCB	690 V AC/400 A/3P/MCCB
UPS5000-E-300K-SM	1000 V AC/630 A/3P	N/A	N/A	N/A
UPS5000-E-300K-SMT	1000 V AC/630 A/3P	N/A	N/A	N/A

8.3 Environmental Specifications

Item	UPS5000-E-200K-SM/FM	UPS5000-E-300K-SM/SMT
Operating temperature	0–40 ℃	
Storage temperature	–40 ℃ to +70 ℃	
Humidity	0%–95% RH (non-condensing)	
Altitude	0–1000 m When the altitude is greater than 1000 m but less than 4000 m, the rated power should be derated. For details, see the IEC62040-3.	

8.4 Safety Regulations and EMC

Item	UPS5000-E-200K-SM/FM	UPS5000-E-300K-SM/SMT
Item	EN62040-1: 2013 IEC62040-1: 2013 YD/T2165-2010	
EMC	EN62040-2 IEC62040-2 IEC61000-2-2 IEC61000-4-2 EN61000-4-6 EN61000-4-3	

Copyright © Huawei Technologies Co., Ltd.

Item	UPS5000-E-200K-SM/FM	UPS5000-E-300K-SM/SMT
	EN61000-4-3 IEC61000-4-8 IEC61000-4-11	

8.5 Mains Input Electrical Specifications

Item	UPS5000-E-200K-SM/FM	UPS5000-E-300K-SM/SMT
Input system	Three-phase, five-wire	
Rated input voltage	380 V AC, 400 V AC, or 415 V AC (line voltage)	
Input voltage	80–280 V AC (phase voltage) At 40 ℃: The UPS works at full load when the voltage is 187–280 V AC and is derated to 40% load when the voltage is 187–80 V AC. At 30 ℃: The UPS works at full load when the voltage is 176–280 V AC and is derated to 40% load when the voltage is 176–80 V AC.	
Rated frequency	50 Hz/60 Hz	
Input frequency	40–70 Hz	
Input PF	> 0.99 (full load); > 0.98 (half load)	
THDi	< 3% (full linear load); < 5% (full non-linear load)	

8.6 Bypass Input Electrical Specifications

Item	UPS5000-E-200K-SM/FM	UPS5000-E-300K-SM/SMT
Rated input voltage	380 V AC, 400 V AC, or 415 V AC (line voltage)	
Input system	Three-phase, four-wire, and PE	
Rated frequency	50 Hz/60 Hz	
Input mode	The mains input and bypass input share a power source or use different power sources.	

Copyright © Huawei Technologies Co., Ltd.

Item	UPS5000-E-200K-SM/FM	UPS5000-E-300K-SM/SMT
Bypass current equalization function	In a parallel system, control the cable length to equalize the current. The current equalization must be less than 25%.	

8.7 Battery Specifications

Item	UPS5000-E-200K-SM/FM	UPS5000-E-300K-SM/SMT
Battery voltage	360–552 V DC (30–46 batteries, 40 by default); If there are 38 or 36 batteries, output power is not derated. If there are 34 batteries, output power is derated to 0.9. If there are 32 or 30 batteries, output power is derated to 0.8.	
Battery management	Intelligent battery management	
Cold start	In the case of a mains failure, batteries can start the UPS to power loads.	
Battery string sharing	Battery string sharing is supported in a parallel system. No battery string is shared by default.	
Charge voltage	• Equalized voltage: 2.3–2.4 V/Cell, default: 2.35 V/Cell (30–42 batteries) • Equalized voltage: 2.3–2.35 V/Cell, default: 2.35 V/Cell (44 batteries) • Equalized voltage: 2.3–2.3 V/Cell, default: 2.3 V/Cell (46 batteries) • Float voltage: 2.23–2.27 V/Cell, default: 2.25 V/Cell	

8.8 Output Electrical Specifications

Item	UPS5000-E-200K-SM/FM	UPS5000-E-300K-SM/SMT
Output system	Three-phase, four-wire, and PE	
Voltage	380 V AC, 400 V AC, or 415 V AC (tolerance ±1%) (line voltage)	
Frequency	In normal mode, the mains frequency is synchronized with the bypass input frequency. In battery mode, the frequency is 50 Hz or 60 Hz (tolerance ±	

Copyright © Huawei Technologies Co., Ltd.

Item	UPS5000-E-200K-SM/FM	UPS5000-E-300K-SM/SMT
	0.05%).	
Total harmonic distortion of output voltage (THDv)	< 1% (linear full load); < 4% (non-linear full load)	
Output PF	1	
Transfer time	0 ms	
Output voltage unbalance	Voltage unbalance: ±3%; phase unbalance: ±2 °	
Overload capability	Inverter overload capability: • 105% < load ≤ 110%: transfer to bypass mode after 60 min • 110% < load ≤ 125%: transfer to bypass mode after 10 min • 125% < load ≤ 150%: transfer to bypass mode after 1 min Bypass overload capability: • Temperature ≤ 30°C, load ≤ 135%: run for a long time • Temperature ≤ 40°C, load ≤ 125%: run for a long time • 1000% load: run for 100 ms	

8.9 System Electrical Specifications

Item	UPS5000-E-200K-SM/FM	UPS5000-E-300K-SM/SMT
Redundancy design	The auxiliary power supplies, centralized controllers, and parallel signals use redundancy design.	
Number of UPSs connected in parallel	≤ 4	

Copyright © Huawei Technologies Co., Ltd.

A (Optional) TN-C System Application

Figure A-1 to Figure A-4 show cable connections for short-circuiting the input N and PE for different UPS models.

NOTE

The following cable connections are for reference only.

Figure A-1 Short-circuiting the input N and PE (UPS5000-E-200K-SM)

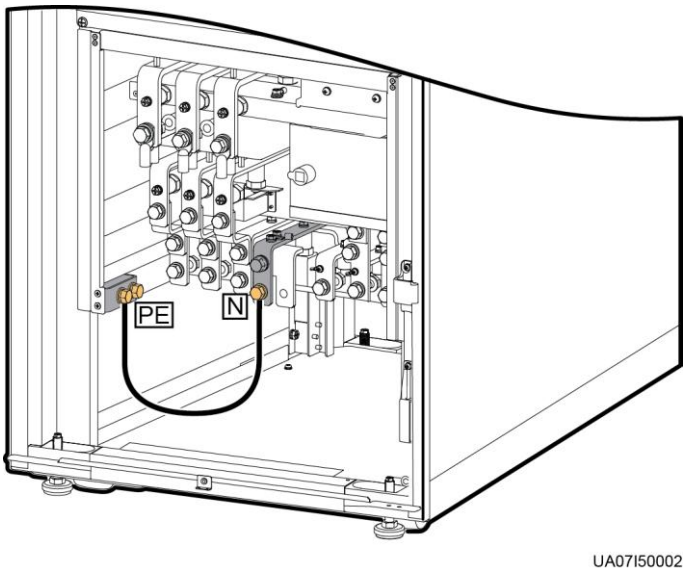

Copyright © Huawei Technologies Co., Ltd.

Figure A-2 Short-circuiting the input N and PE (UPS5000-E-200K-FM)

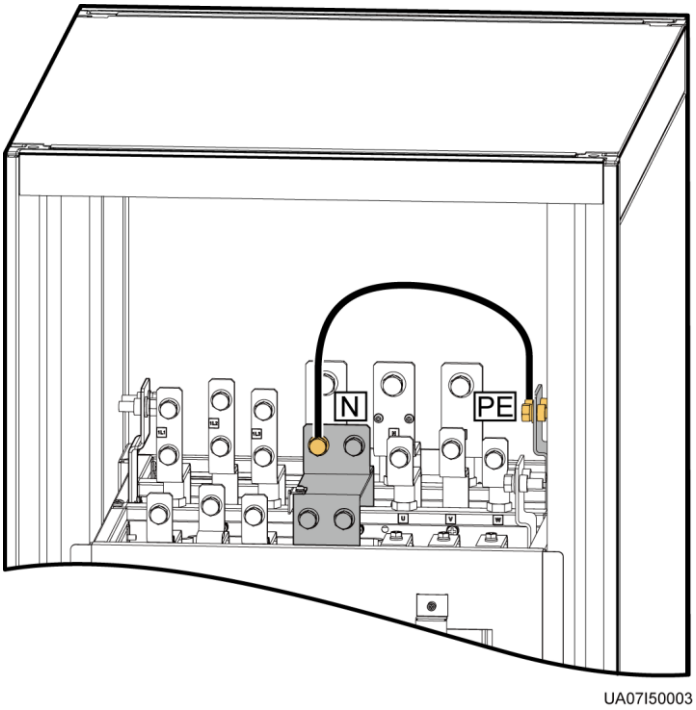

Figure A-3 Short-circuiting the input N and PE (UPS5000-E-300K-SM)

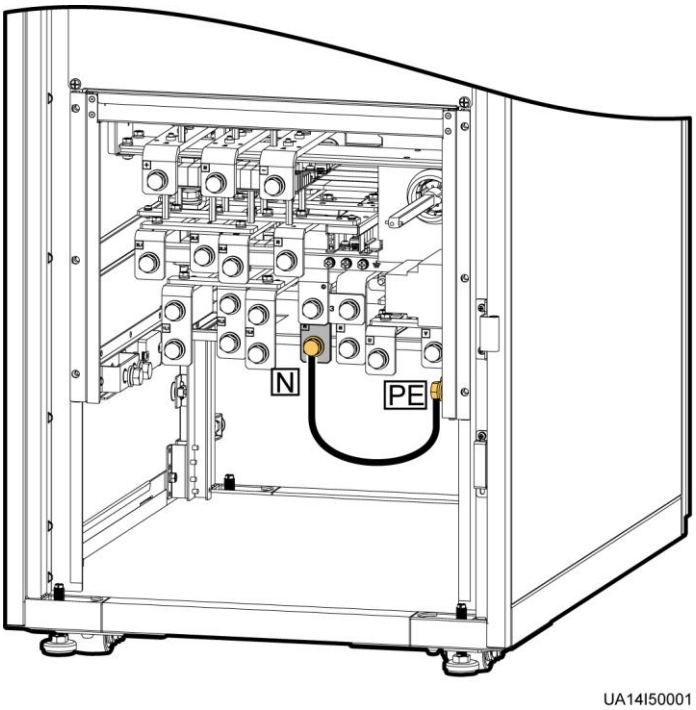

Copyright © Huawei Technologies Co., Ltd.

Figure A-4 Short-circuiting the input N and PE (UPS5000-E-300K-SMT)

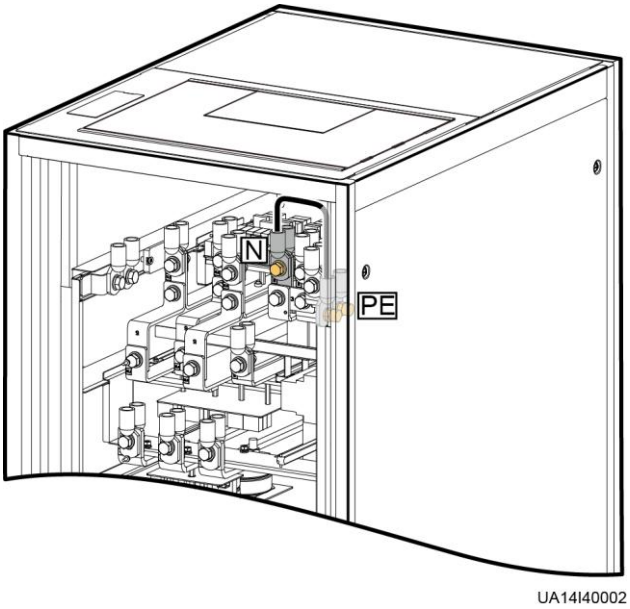

Table A-1 lists the recommended cross-sectional areas for cables.

Table A-1 Recommended cross-sectional areas for cables

Model	Current (A)	Recommended Cross-Sectional Area (mm²)
UPS5000-E-200K-SM/FM	335.4	95
UPS5000-E-300K-SM/SMT	533.1	150

Copyright © Huawei Technologies Co., Ltd.

B Menu Hierarchy

B.1 Menus on the LCD

Level-1 Menu	Level-2 Menu	Level-3 Menu	Level-4 Menu
System Info	Runn Info	AC Output	N/A
		UPS Load	N/A
		Mains Input	N/A
		Bypass Input	N/A
		Battery Status	N/A
		Module Data	N/A
		Total Runtime	N/A
		Environment Data	N/A
	Alarms	Active Alarms	N/A
		Historical Alarms	N/A
		Buzzer Off	N/A
		Clear Faults	N/A
	Settings	Basic	N/A
		Communication	N/A
		Basic Param.	N/A
		Advanced Param.	N/A
		Input Param.	N/A
		Output Param.	N/A
		Bypass Param.	N/A
		Battery Param.	N/A

Copyright © Huawei Technologies Co., Ltd.

Level-1 Menu	Level-2 Menu	Level-3 Menu	Level-4 Menu
		Dry Contacts	N/A
		Settings Wizard	N/A
		CIM Param.	Basic Param.
			Advanced Param.
	Maintenance	Battery Maint.	N/A
		USB Operations	Remove USB
			Upgrade Software
			Load Config.
			Export Config.
			Export Logs
			Export E-labels
			Export Alarms
			Multi-brand
			Serviceable data
			CIM Version
		Inv. ON	N/A
		Inv. OFF	N/A
		ECM Switchover	N/A
		Screen Calib.	N/A
		CIM Maint.	N/A
	About	Model	N/A
		Manufacturer	N/A
		Monitoring Version	N/A
		Power Version	N/A
		Version Info	N/A
Common Functions	AC Output	Phase voltage	N/A
		Line voltage	N/A
		Phase current	N/A
		Frequency	N/A
		Power factor	N/A

Copyright © Huawei Technologies Co., Ltd.

Level-1 Menu	Level-2 Menu	Level-3 Menu	Level-4 Menu
	UPS Load	Active power	N/A
		Apparent power	N/A
		Reactive power	N/A
		Load ratio	N/A
		Crest factor	N/A
	Mains Input	Phase voltage	N/A
		Line voltage	N/A
		Phase current	N/A
		Frequency	N/A
		Power factor	N/A
	Inv. ON	N/A	N/A
	Inv. OFF	N/A	N/A
	Buzzer Off	N/A	N/A
	Historical Alarms	N/A	N/A
System Status	Bypass	N/A	N/A
	Mains	N/A	N/A
	Load	N/A	N/A
	Battery	N/A	N/A

B.2 Menus on the WebUI

Level–1 Menu	Level–2 Menu	Level–3 Menu	Level–4 Menu	Level–5 Menu
Monitoring	Active Alarms	N/A	N/A	N/A
	Real-time Data	UPS	Input	Phase voltage
				Line voltage
				Current
				Power factor
				Frequency

Copyright © Huawei Technologies Co., Ltd.

Level–1 Menu	Level–2 Menu	Level–3 Menu	Level–4 Menu	Level–5 Menu
			Bypass	Phase voltage
				Line voltage
				Current
				Power factor
				Frequency
			Output	Phase voltage
				Line voltage
				Current
				Power factor
				Frequency
				Crest factor
				Load ratio
				Active power
				Apparent power
				Reactive power
				System active power
				System apparent power
				System reactive power
			Battery	Voltage
				Current
				Bus voltage
				Battery temperature
				Backup time
				Remaining capacity
				SOH
			Environment Data	Ambient temperature
				Ambient humidity

Copyright © Huawei Technologies Co., Ltd.

Level-1 Menu	Level-2 Menu	Level-3 Menu	Level-4 Menu	Level-5 Menu
		Module	Rectifier	Phase voltage
				Line voltage
				Current
				Power factor
				Frequency
				Zero sequence current
				Bus voltage
				Battery voltage
				Battery current
			Inverter	Phase voltage
				Line voltage
				Current
				Inductance current
				Output phase voltage
				Frequency
				Active power
				Apparent power
				Reactive power
				Power factor
				Load ratio
				Crest factor
		Battery String	N/A	N/A
	Param. Settings	Basic Param.	Single/Parallel	N/A
			Voltage level	N/A
			Output frequency	N/A
			Battery capacity	N/A
			Number of cells	N/A
		Advanced Param.	System capacity	N/A
			Power module	N/A

Copyright © Huawei Technologies Co., Ltd.

Level–1 Menu	Level–2 Menu	Level–3 Menu	Level–4 Menu	Level–5 Menu
			capacity	
			Requisite modules	N/A
			Redundant modules	N/A
			Working mode	N/A
			BSC mode	N/A
			Paral. sys. hibernate	N/A
			Module cycle hiber. period	N/A
			High ambient temperature alarm threshold	N/A
			Low ambient temperature alarm threshold	N/A
			Top outlet fan	N/A
			EOD restart	N/A
			EOD restart delay	N/A
			Inverter async. alarm	N/A
			Bus overvoltage recovery	N/A
			Bus overvolt. recovery time	N/A
			Capacitor failure detection	N/A
			Capacitor failure detection upper limit	N/A
			Capacitor failure detection lower limit	N/A
			Input cur. limiting	N/A
			Input cur. limiting ratio	N/A
			No-load output shows zero	N/A
			Current equal. detection	N/A

Copyright © Huawei Technologies Co., Ltd.

Level-1 Menu	Level-2 Menu	Level-3 Menu	Level-4 Menu	Level-5 Menu
			Bus Capa. Life	N/A
			Altitude	N/A
			Modbus TCP encryption	N/A
			Batt. charging capacity mismatch	N/A
			Battery segment detection	N/A
			Emergency Shut Down Enable	N/A
		Input Param.	D.G. mode	N/A
			D.G. power limiting	N/A
			D.G. charger power ratio	N/A
			Intra-rack power module start delay	N/A
			Inter-rack power module start delay	N/A
			Input adaptability	N/A
		Output Param.	Output volt. adjustment	N/A
			Outp. transf. interrupt time	N/A
			Self-load output cur. ratio	N/A
			Output interruption transfer time	N/A
			Max. BPM transfer times	N/A
		Bypass Param.	Bypass frequency range	N/A
			Maximum bypass voltage	N/A
			Minimum bypass voltage	N/A
			ECO voltage range	N/A

Copyright © Huawei Technologies Co., Ltd.

Level–1 Menu	Level–2 Menu	Level–3 Menu	Level–4 Menu	Level–5 Menu
			BPM mode upon BPM overtemp	N/A
		Battery Param.	Installation time	N/A
			Maintenance period	N/A
			Battery type	N/A
			Chg. cur. limiting coef.	N/A
			Cell float voltage	N/A
			Cell equalized volt	N/A
			Transfer-to-equalized charging cur. coef.	N/A
			SOC to start equalized charging	N/A
			Automatic equalized charging	N/A
			Forced equalized charging protection time	N/A
			Equalized charging protection interval	N/A
			Scheduled equalized charging interval	N/A
			Float volt. temp. comp.	N/A
			Float volt. temp. comp. coef.	N/A
			Max batt. dis.time	N/A
			Sched. shallow dis. test	N/A
			Sched. shallow dis. test time	N/A
			Sched. shallow dis. test interval	N/A
			Shallow dis. test dis. ratio	N/A
			Undertemp. alarm thresh.	N/A

Copyright © Huawei Technologies Co., Ltd.

Level-1 Menu	Level-2 Menu	Level-3 Menu	Level-4 Menu	Level-5 Menu
			Overtemp. alarm thresh.	N/A
			Backup time warning	N/A
			Backup time warn. thresh.	N/A
			Remain. cap. warning	N/A
			Remain. cap. warn. thresh.	N/A
			Dis.cur.0.1C EOD	N/A
			Dis. cur.0.3C EOD	N/A
			Dis. cur.0.5C EOD	N/A
			Dis. cur.1.0C EOD	N/A
			Intelligent hibernation	N/A
			Class 1 grid hiber. time	N/A
			Class 2 grid hiber. time	N/A
			Single batt. float chg. voltage deviation alarm thres.	N/A
			Single batt. dis. voltage deviation alarm thres.	N/A
		Dry Contacts	MUE05A connection	N/A
			Battery ground fault	N/A
			D.G. connection	N/A
			BCB connection	N/A
			Battery breaker	N/A
			PDC output breaker	N/A
			PDC maintenance breaker	N/A

Copyright © Huawei Technologies Co., Ltd.

Level-1 Menu	Level-2 Menu	Level-3 Menu	Level-4 Menu	Level-5 Menu
			BP/SYSMT Switch	N/A
			BP/SYSMT switch function	N/A
			SPD/SYSOUT Switch	N/A
			SPD/SYSOUT switch function	N/A
			MUE06A connection	N/A
			MUS05A DO_1 Action	N/A
			MUS05A DO_2 Action	N/A
			MUS05A DO_3 Action	N/A
			MUS05A DO_4 Action	N/A
			MUE07A DO_1 Action	N/A
			MUE07A DO_2 Action	N/A
			MUE07A DO_3 Action	N/A
			MUE07A DO_4 Action	N/A
			MUE07A DO_5 Action	N/A
			MUS05A DO_1	N/A
			MUS05A DO_2	N/A
			MUS05A DO_3	N/A
			MUS05A DO_4	N/A
			MUE07A DO_1	N/A
			MUE07A DO_2	N/A
			MUE07A DO_3	N/A
			MUE07A DO_4	N/A
			MUE07A DO_5	N/A

Copyright © Huawei Technologies Co., Ltd.

Level-1 Menu	Level-2 Menu	Level-3 Menu	Level-4 Menu	Level-5 Menu
			MUE07A DI_1	N/A
			MUE07A DI_2	N/A
			MUE07A DI_3	N/A
			MUE07A DI_4	N/A
			MUE07A DI_5	N/A
	Comm. Config.	System IP Settings	IP address	N/A
			Subnet mask	N/A
			Gateway	N/A
			NAT mapping	N/A
		Serial Port Settings	RS485 Com Baud Rate	N/A
			RS485 Com Address	N/A
			Parity mode	N/A
			Stop bit	N/A
		Battery Temperature Sensor Settings	Start addr. of batt. temp. sensor	N/A
			Batt. temp. sensors	N/A
		Ambient Temperature and Humidity Sensor Settings	Start address of ambient temperature and humidity sensors	N/A
			Ambient temperature and humidity sensors	N/A
		BMU Settings	BMU start address	N/A
			BMUs	N/A
		NTC Settings	NTC	N/A
	CIM Param.	Basic Param.	Number of CIMs	N/A
			CIM start address	N/A
			CIM1 number of BIM1	N/A
			Number of battery strings	N/A

Copyright © Huawei Technologies Co., Ltd.

Level–1 Menu	Level–2 Menu	Level–3 Menu	Level–4 Menu	Level–5 Menu
			Batteries in a battery string	N/A
			CIM logical start addr	N/A
		Advanced Param.	Current source	N/A
			BCB connects to CIM	N/A
			Batt. abnormal BCB trip	N/A
			Multi-Hall cur. setting	N/A
		Batt. String Config	N/A	N/A
	Control	System Commands and Tests	Inv. ON	N/A
			Inv. OFF	N/A
			Clear Fault	N/A
			Bypass runtime (Clear)	N/A
			Inv. runtime (Clear)	N/A
			Forced equalized charging (Start, Stop)	N/A
			Shallow discharge test (Start, Stop)	N/A
			Capacity Test (Start, Stop)	N/A
		CIM Control	CIM No.	N/A
			BIM No.	N/A
			Reset (CIM, BIM)	N/A
			Blink (Start, Stop)	N/A
			Internal resistance (Measure)	N/A
Query	Alarm History	Query	N/A	N/A
		Export	N/A	N/A
	Logs	Historical log	N/A	N/A

Copyright © Huawei Technologies Co., Ltd.

Level–1 Menu	Level–2 Menu	Level–3 Menu	Level–4 Menu	Level–5 Menu
		Cap. test log	N/A	N/A
		Common test log	N/A	N/A
Config.	User Mgmt.	User Mgmt.	New	N/A
			Modify	N/A
			Delete	N/A
			Lock	N/A
			Unlock	N/A
			LUI password complexity check	N/A
		Idle Timeout Logout	Allowed timeout	N/A
	Site Config.	Time zone	Time zone	N/A
		System Date and Time	Date (Local)	N/A
			Time (Local)	N/A
		System Information	Name	N/A
			Location	N/A
			Contact information	N/A
		SNMP	SNMP version	N/A
			SNMP port	N/A
		SNMP Trap	No.	N/A
			Trap addr.	N/A
			Trap port	N/A
			SNMP version	N/A
			User name/Community	N/A
		Certificate Management	Upload	N/A
			Password	N/A
			Confirm password	N/A
			Export certificate	N/A
		Configuration Management	Upload configuration file	N/A

Copyright © Huawei Technologies Co., Ltd.

Level-1 Menu	Level-2 Menu	Level-3 Menu	Level-4 Menu	Level-5 Menu
			Export configurations	N/A
		Multi-brand Management	Upload	N/A
		Configure Alarm Notification Server	Email server IP address	N/A
			Sender's email	N/A
			SMTP port	N/A
			Secure connection (TLS encryption)	N/A
			User account authentication required when sending a mail	N/A
		Configure Alarm Notification Email Address	No.	N/A
			Email	N/A
			Language	N/A
			Alarm Severity	N/A
			Scheduled Notifi.	N/A
		ModbusTCP Certificate Management	Upload	N/A
			Password	N/A
			Confirm password	N/A
		ModbusTCP CA Certificate Management	Upload	N/A
		ModbusTCP Authentication	Authentication	N/A
			New password	N/A
			Confirm password	N/A
		eUPS Certificate Management	Upload	N/A
			Password	N/A
			Confirm password	N/A
	RCCMD	RCCMD	RCCMD function	N/A
		SSL Encrypted Transmission	SSL Encrypted Transmission	N/A

Copyright © Huawei Technologies Co., Ltd.

Level-1 Menu	Level-2 Menu	Level-3 Menu	Level-4 Menu	Level-5 Menu
		Event Configuration	N/A	N/A
		RCCMD Certificate Management	Select the RCCMD certificate to be uploaded	N/A
			Select the RCCMD certificate key to be uploaded	N/A
			Select the RCCMD CA certificate to be uploaded	N/A
Maint.	Calib	Bypass	Ph. A input volt.	N/A
			BPM ph. B input volt.	N/A
			BPM ph. C input volt.	N/A
			Ph. A output volt.	N/A
			Ph. B output volt.	N/A
			Ph. C output volt.	N/A
		Module	Ph. A input volt.	N/A
			Ph. B input volt.	N/A
			Ph. C input volt.	N/A
			Ph. A input cur.	N/A
			Ph. B input cur.	N/A
			Ph. C input cur.	N/A
			Pos. bus volt.	N/A
			Neg. bus volt.	N/A
			Zero sequence cur.	N/A
			Pos. batt. volt.	N/A
			Pos. batt. chg. volt.	N/A
			Pos. batt. chg. cur.	N/A
			Pos. batt. dis. cur.	N/A
			Neg. batt. volt.	N/A
			Neg. batt. chg. volt.	N/A

Copyright © Huawei Technologies Co., Ltd.

Level-1 Menu	Level-2 Menu	Level-3 Menu	Level-4 Menu	Level-5 Menu
			Neg. batt. chg. cur.	N/A
			Neg. batt. dis. cur.	N/A
			Inv. ph. A volt.	N/A
			Inv. ph. B volt.	N/A
			Inv. ph. C volt.	N/A
			Ph. A output volt.	N/A
			Ph. B output volt.	N/A
			Ph. C output volt.	N/A
			Inv. ph. A cur.	N/A
			Inv. ph. B cur.	N/A
			Inv. ph. C cur.	N/A
			Inv. ph. A induc. cur.	N/A
			Inv. ph. B induc. cur.	N/A
			Inv. ph. C induc. cur.	N/A
		ECM	BPM ph. A input volt.	N/A
			BPM ph. B input volt.	N/A
			BPM ph. C input volt.	N/A
			Rack ph. A output cur.	N/A
			Rack ph. B output cur.	N/A
			Rack ph. C output cur.	N/A
			Rack ph. A output volt.	N/A
			Rack ph. B output volt.	N/A
			Rack ph. C output volt.	N/A

Copyright © Huawei Technologies Co., Ltd.

Level-1 Menu	Level-2 Menu	Level-3 Menu	Level-4 Menu	Level-5 Menu
	Commissioning Var.	Bypass	BPM SW commissioning var. 0 data	N/A
			BPM SW commissioning var. 1 data	N/A
			BPM SW commissioning var. 2 data	N/A
			BPM SW commissioning var. 3 data	N/A
			BPM SW commissioning var. 4 data	N/A
			BPM SW commissioning var. 5 data	N/A
		Module	Rec. SW commissioning var. 0 data	N/A
			Rec. SW commissioning var. 1 data	N/A
			Rec. SW commissioning var. 2 data	N/A
			Rec. SW commissioning var. 3 data	N/A
			Rec. SW commissioning var. 4 data	N/A
			Rec. SW commissioning var. 5 data	N/A
			Inv. SW commissioning var. 0 data	N/A
			Inv. SW commissioning var. 1 data	N/A

Copyright © Huawei Technologies Co., Ltd.

Level-1 Menu	Level-2 Menu	Level-3 Menu	Level-4 Menu	Level-5 Menu
			Inv. SW commissioning var. 2 data	N/A
			Inv. SW commissioning var. 3 data	N/A
			Inv. SW commissioning var. 4 data	N/A
			Inv. SW commissioning var. 5 data	N/A
		ECM	ECM SW commissioning var. 0 data	N/A
			ECM SW commissioning var. 1 data	N/A
			ECM SW commissioning var. 2 data	N/A
			ECM SW commissioning var. 3 data	N/A
			ECM SW commissioning var. 4 data	N/A
			ECM SW commissioning var. 5 data	N/A
	Upgrade	Upgrade UPS Software	N/A	N/A
	Download	Download	Serviceable data	N/A
			CIM version	N/A
			E-Label	N/A

Copyright © Huawei Technologies Co., Ltd.

C Alarm List

Alarm ID (Alarm ID-Cause ID)	Alarm Name	Severity	Cause	Solution
0001-1	Mains voltage abnormal	Minor	• Cable connections are incorrect. • The mains is not normal. • The power module is faulty.	1. Check whether cables to mains are disconnected, loose, or incorrectly connected. 2. If cable connections are correct, measure the mains voltage with a multimeter. If the mains voltage exceeds 280 V, the mains input is not normal; if the mains voltage is less than 272 V, the sampling circuit of the power module is not normal. Replace the faulty module.
0001-2			• Cable connections are incorrect. • The mains is not normal. • The mains input fuse for the power module is blown.	1. Check whether cables to mains are disconnected, loose, or incorrectly connected. 2. If cable connections are correct, measure the mains voltage with a multimeter. If the mains voltage is less than 80 V, the mains voltage is not normal; if the mains voltage exceeds 88 V, the power module sampling circuit or fuse may not be working properly. Replace the faulty module.
0001-3			The mains is not normal.	Check the mains.
0004-1	Mains ph. Reversed	Minor	Cable connections are incorrect.	Verify the cable connections.

Copyright © Huawei Technologies Co., Ltd.

Alarm ID (Alarm ID-Cause ID)	Alarm Name	Severity	Cause	Solution
0005-1	Mains neutral absent	Minor	Cable connections are incorrect.	1. Secure or connect the neutral wire to the cabinet if it is loose or disconnected. 2. Check that the neutral wire to the power distribution system is normal.
0006-1	Mains undervoltage	Minor	• The mains is not normal. • The power module sampling circuit is not normal.	Check whether the mains voltage ranges from 80 V (excluding 80 V) to 176 V. If no, the mains monitoring circuit for the power module is faulty. Replace the faulty module.
0010-1	Abnormal bypass voltage	Minor	• The bypass voltage range is not correctly set. • The bypass input voltage is not normal.	1. Check the bypass input voltage or cable connections with a multimeter. 2. Check the voltage system and bypass voltage thresholds configured on the LCD.
0010-2			• The bypass frequency range is not correctly set. • The bypass input frequency is not normal.	1. Check the bypass input voltage or cable connections with a multimeter. 2. Check the bypass input frequency. Check the rated frequency and frequency range configured on the LCD.
0011-1	Bypass phase reversed	Minor	The phase sequence of the	Check whether the cable phase sequence is correct using a multimeter. If no multimeter is

Copyright © Huawei Technologies Co., Ltd.

Alarm ID (Alarm ID-Cause ID)	Alarm Name	Severity	Cause	Solution
			three-phase bypass input is reversed.	available, exchange the positions of any two cables.
0012-1	Bypass neutral absent	Minor	The neutral wire of bypass input is not installed properly.	1. Secure or connect the neutral wire to the cabinet if it is loose or disconnected. 2. Check that the neutral wire to the power distribution system is normal.
0020-1	Battery connected reversely	Critical	Batteries are not properly installed.	1. Check whether battery polarities are correctly installed by using a multimeter. If no, correct the installation. 2. Check whether the battery input voltage of the UPS is normal. If yes, the battery sampling circuit of the power module is faulty. Replace the power module.
0021-1	Battery EOD	Critical	The battery voltage reaches the EOD voltage threshold due to continuous discharge.	If the BCB box is configured, check whether the BCB box trips. If it trips, close the BCB box switch.
0022-1	No battery	Minor	• There is no battery string. • The battery string is not properly installed. • The power module battery fuse is blown.	1. Check that battery cables are correctly connected. 2. Check that the battery terminal voltage is normal. 3. Check that the battery fuse in the power module is intact.
0025-1	Battery overvoltage	Minor	• The configured number of batteries	1. Check whether battery parameters are correctly set. 2. If they are correctly set, certain batteries may be faulty. 3. Check whether the battery

Copyright © Huawei Technologies Co., Ltd.

Alarm ID (Alarm ID-Cause ID)	Alarm Name	Severity	Cause	Solution
			is less than the actual number. • The battery neutral wire is not installed properly.	neutral wire is correctly connected.
0026-1	Low battery voltage	Minor	• Battery discharge results in low battery voltage. • The battery neutral wire is not installed properly. • The charger is faulty.	1. If the low battery voltage alarm is generated in battery mode, check whether the mains voltage recovers. If yes, charge batteries immediately. 2. Check whether the battery neutral wire is correctly connected. 3. If this alarm is generated in normal mode, check whether the battery switch is ON. If yes, the charger may be faulty. Replace the related power module.
0530-1	Battery ground fault	Critical	• The battery string is not properly grounded. • The battery ground monitoring cable is faulty. • The dry contact board is faulty.	1. Check whether the positive and negative terminals of the battery string are grounded or have sufficient resistance to the ground. 2. Check whether the battery grounding failure detector is faulty by replacing it with a new one. 3. If no battery grounding failure detector is available, check on the dry contact board whether the battery grounding failure detector is enabled. If yes, disable it and check whether the alarm is cleared. If the alarm persists, the dry contact board may be faulty. Replace the board.
0032-1	Battery overvoltage	Critical	• The battery	1. Check the battery voltage. 2. Check that the configured

Copyright © Huawei Technologies Co., Ltd.

Alarm ID (Alarm ID-Cause ID)	Alarm Name	Severity	Cause	Solution
	protection		voltage is greater than the upper threshold. • The configured number of batteries is less than the actual number. • The actual number of batteries does not meet requirements.	number of batteries matches the actual number. 3. Check that the actual number of batteries meets requirements.
0036-2	Battery maintenance reminder	Warning	The time for maintenance arrives.	Maintain the batteries.
0037-1	Battery undervoltage	Critical	• The UPS has worked in battery mode for an extended amount of time. • The charger is faulty.	1. Check whether the battery voltage is normal. 2. Check whether the output is overloaded. 3. Check whether any battery is damaged. If yes, replace the battery. 4. Check whether any battery charger generates an alarm. If yes, replace the faulty module.
0040-7	Rectifier abnormal	Critical	• The fan for the power module is not functioning properly. • The air channel	1. Check that the air channel for the module is free from blockage. 2. Check whether the fans are functioning properly. Replace the power module if the fans are faulty.

Copyright © Huawei Technologies Co., Ltd.

Alarm ID (Alarm ID-Cause ID)	Alarm Name	Severity	Cause	Solution
			for the power module is obstructed.	
0043-1	Fan abnormal	Critical	• The fan for the power module is abnormal. • The fan monitoring cable for the power module is not working properly.	Replace the faulty power module.
0043-2			The fan is faulty.	Check the fan or replace the bypass module.
0043-3			• The fan is faulty. • The fan monitoring cable is faulty.	1. Replace the fan. 2. Check the fan monitoring cable.
0043-4				
0047-1	Not ready	Critical	The ready switch is OFF.	Close the ready switch.
0060-4	Inverter abnormal	Critical	• A load short-circuit occurs. • A short circuit occurs inside the module. (This fault seldom occurs.)	1. Check load cable distributions. 2. If load cable distributions are normal, replace the power module.
0061-2	Inverter alarm	Minor	• The I2C bus is not	1. Rectify the fault and check whether the alarm is cleared. 2. If the alarm is generated again,

Copyright © Huawei Technologies Co., Ltd.

Alarm ID (Alarm ID-Cause ID)	Alarm Name	Severity	Cause	Solution
			normal. • The E2PROM is faulty.	replace the power module.
0061-7	Inverter alarm	Minor	The bypass waveform is not normal.	• If not all modules generate the alarm, start the UPS, transfer it to normal mode, and replace the faulty module. • If all modules generate the alarm, open the bypass input circuit breaker. After the inverter relay is closed, close the bypass input circuit breaker 10 seconds later.
0564-1	Overload timeout	Critical	• The load is excessive. • Derating reduces the rated system power. • The module is damaged.	1. Check that there is no overload. 2. Check that the module power is not derated due to a fan fault. 3. If the alarm persists, replace the power module.
0565-1	Load impact transfer-to-bypass	Minor	• A large-power RCD load is instantly connected, or the output load short-circuits. • The inverter bridge short-circuits.	1. Check the load. 2. If the load is normal, replace the power module.
0566-1	Output overload	Minor	• The load is excessive.	1. Check that there is no overload. 2. Check that the module power is not derated due to a fan fault.

Copyright © Huawei Technologies Co., Ltd.

Alarm ID (Alarm ID-Cause ID)	Alarm Name	Severity	Cause	Solution
			• Derating reduces the rated system power. • The module is damaged.	3. If the alarm persists, replace the power module.
0570-4	BPM module abnormal	Critical	• The bypass fan is not functioning properly, or the air channel is blocked. • The ambient temperature exceeds the upper threshold. • The load is excessive.	1. Check the bypass fan and air channel. If the fan is faulty, replace it. 2. Check that the ambient temperature has not exceeded 40 ℃. 3. Check that there is no overload.
0583-1	Inter-rack par. cable abnormal	Critical	• The inter-rack parallel system CAN bus is disconnected or short-circuited. • Only one rack works in a parallel system. • An ECM is faulty.	1. Check the inter-rack parallel system CAN bus. 2. Rectify the disconnection or short-circuit fault. 3. Replace the ECM.
0583-4			The inter-rack	Replace the inter-rack parallel

Copyright © Huawei Technologies Co., Ltd.

Alarm ID (Alarm ID-Cause ID)	Alarm Name	Severity	Cause	Solution
			industrial frequency synchronization cable is broken.	cable.
0583-5			The inter-rack carrier synchronization cable is broken.	
0583-6			• The intra-rack INVBYP cable is broken. • The parallel CAN bus is broken.	
0584-2	Inter-rack par. cable alarm	Minor	The inter-rack parallel cable is faulty.	Replace the inter-rack parallel cable.
0584-4			The inter-rack industrial frequency synchronization cable is broken.	
0085-1	EPO	Critical	The EPO button is pressed.	Restore the EPO button status. Start the UPS after the alarm is cleared.
0086-1	Max. number of BPM transfers	Minor	The system frequently transfers to bypass mode due to overload timeout or load impact.	Check the load.
0087-1	System transfer-to-	Warning	The neighboring	Check the reason why the neighboring UPS transfers to

Copyright © Huawei Technologies Co., Ltd.

Alarm ID (Alarm ID-Cause ID)	Alarm Name	Severity	Cause	Solution
	bypass		UPS is not normal, and transfers to bypass mode.	bypass mode.
0088-1	Rack address conflict	Critical	The configured rack address conflicts with another one.	Check the rack address setting.
0089-1	Rack output overload	Minor	• The load is excessive. • The rack capacity setting is not appropriate.	• Check the load and remove some loads or expand the UPS power capacity if the UPS is overloaded. • Check that the configured rack capacity meets requirements.
0090-1	Dry contact board fault	Critical	I2C communication with the dry contact board MUE05A fails.	Replace the dry contact board MUE05A.
0090-2			I2C communication with the dry contact board MUE06A fails.	Replace the dry contact board MUE06A.
0356	Battery Mode	Minor	The UPS is working in battery mode.	The running status is displayed. See details about how to handle other alarms.
0359	No power supplied	Warning	No power is supplied.	The running status is displayed. See details about how to handle other alarms.
0332	Output disabled	Minor	The output is disabled.	The running status is displayed. See details about how to handle other alarms.
0334	BSC master	Warning	BSC master system.	The running status is displayed. No further measures are required.

Copyright © Huawei Technologies Co., Ltd.

Alarm ID (Alarm ID-Cause ID)	Alarm Name	Severity	Cause	Solution
	system			
0334	BSC slave system		BSC slave system.	The running status is displayed. No further measures are required.
0337	PDC bypass input breaker open	Critical	The bypass input circuit breaker on the PDC is OFF.	The running status is displayed. No further measures are required.
0338	PDC output breaker open	Critical	The output circuit breaker on the PDC is OFF.	1. Check that all UPS output circuit breakers are ON. 2. On the LCD, check that **PDC output breaker open** alarm has disappeared. If the alarm persists, tap the **Clear Fault** button to clear the alarm.
0341	PDC Maint. breaker closed	Minor	The maintenance circuit breaker on the PDC is ON.	The running status is displayed. No further measures are required.
0342	Mains input breaker open	Critical	The mains input circuit breaker is OFF.	The running status is displayed. No further measures are required.
0343	BPM input breaker open	Critical	The bypass input circuit breaker is OFF.	The running status is displayed. No further measures are required.
0340	Maint. breaker closed	Minor	The maintenance circuit breaker is ON.	The running status is displayed. No further measures are required.
0335	Generator connected	Warning	The generator is connected.	The running status is displayed. No further measures are required.
0594-1	Insufficient redundant racks	Minor	• The load is excessive. • The configured number	1. Reduce the load. 2. Decrease the configured number of redundant racks.

Copyright © Huawei Technologies Co., Ltd.

Alarm ID (Alarm ID-Cause ID)	Alarm Name	Severity	Cause	Solution
			of redundant racks is incorrect.	
0095-1	Insuffi. redundancy	Minor	• The load is excessive. • The configured number of redundant modules is incorrect.	1. Reduce the load. 2. Decrease the configured number of redundant modules.
0096-1	ECO volt. Abnormal	Minor	• The ECO bypass voltage or frequency is out of the preset range. • The ECO bypass voltage or frequency range is incorrectly set. • The bypass input sequence is reverse or the neutral wire is disconnected.	1. Check the bypass input voltage and frequency. 2. Check that the rated voltage, rated frequency, ECO bypass voltage range, and frequency range are correctly set. 3. Check that the bypass cables and circuit breakers are correctly connected.
0098-1	Bypass current not shared	Minor	• The output and input circuit breakers are OFF. • The	1. Check that the output and bypass input circuit breakers on each rack are ON. 2. Check that bypass input and output power cables on each rack meet the length requirements.

Copyright © Huawei Technologies Co., Ltd.

Alarm ID (Alarm ID-Cause ID)	Alarm Name	Severity	Cause	Solution
			length of the bypass input or output cables is incorrect. • The bypass SCR open-circuits.	3. Rectify any bypass SCR open-circuit.
0150-1	Inverter asynchronous	Minor	• The bypass frequency changes fast. • The output frequency track rate is incorrectly set.	1. Check that the bypass output frequency does not change fast. 2. Check that the **Output freq. track rate** is properly set.
0101-1	BSC signal abnormal	Minor	• The dual bus connector is loose. • Parameters are set incorrectly.	1. Check the dual bus connector. 2. Check the parameter settings.
0102-1	Maint. breaker misoperation	Critical	The user operation is incorrect.	1. Shut down the inverter and then close the maintenance circuit breaker. 2. After maintenance, open the maintenance circuit breaker and then start the inverter.
0380	In self-check	Warning	The inverter is in self-check.	Wait until the inverter self-check is complete.

Copyright © Huawei Technologies Co., Ltd.

D Acronyms and Abbreviations

A

ASIC	application-specific integrated circuit
ATS	AC transfer switch
AWG	American wire gauge

B

BSC	bus synchronization controller
BCB-BOX	battery circuit breaker box
BBB-BOX	battery bus bar box

C

CAN	control area network
CE	Conformite Europeenne

D

DSP	digital signal processing

E

ECO	economy control operation
EPO	emergency power off
ECM	energy control module
EOD	end of discharge

F

Copyright © Huawei Technologies Co., Ltd.

FE	fast Ethernet
I	
IEC	International Electrotechnical Commission
L	
LCD	liquid crystal display
M	
MDU	monitor display unit
N	
NC	normally closed
NO	normally open
NTC	negative temperature coefficient
P	
PDC	power distribution cabinet
PE	protective earthing
PDU	power distribution unit
R	
RS485	Recommend Standard 485
S	
SNMP	Simple Network Management Protocol
SOC	state of charge
SOH	state of health
STS	static transfer switch
T	
THDi	total distortion of the input current waveform
THDv	total harmonic distortion of output voltage

Copyright © Huawei Technologies Co., Ltd.

U

UPS	uninterruptible power system
USB	Universal Serial Bus

V

VRLA	valve-regulated lead acid battery

Copyright © Huawei Technologies Co., Ltd.