UPS5000-E-(400 kVA–800 kVA)

User Manual (50 kVA Power Modules)

Issue	25
Date	2026-07-09

HUAWEI DIGITAL POWER TECHNOLOGIES CO., LTD.

Copyright © Huawei Digital Power Technologies Co., Ltd. 2026. All rights reserved.

No part of this document may be reproduced or transmitted in any form or by any means without prior written consent of Huawei Digital Power Technologies Co., Ltd.

Trademarks and Permissions

HUAWEI and other Huawei trademarks are the property of Huawei Technologies Co., Ltd.
All other trademarks and trade names mentioned in this document are the property of their respective holders.

Notice

The purchased products, services and features are stipulated by the contract made between Huawei Digital Power Technologies Co., Ltd. and the customer. All or part of the products, services and features described in this document may not be within the purchase scope or the usage scope. Unless otherwise specified in the contract, all statements, information, and recommendations in this document are provided "AS IS" without warranties, guarantees or representations of any kind, either express or implied. The information in this document is subject to change without notice. Every effort has been made in the preparation of this document to ensure accuracy of the contents, but all statements, information, and recommendations in this document do not constitute a warranty of any kind, express or implied.

Huawei Digital Power Technologies Co., Ltd.

Address: Huawei Digital Power Antuoshan Headquarters
Futian, Shenzhen 518043
People's Republic of China

Website: https://digitalpower.huawei.com

More Information

Huawei Digital Power Information Experience Center

https://info.support.huawei.com/Energy/info

About This Document

Purpose

This document describes the UPS5000-E in terms of its features, performance specifications, working principles, appearance as well as instructions for installation, and operation and maintenance (O&M). UPS is short for uninterruptible power system.

Figures provided in this document are for reference only.

Intended Audience

This document is intended for:

- Technical support engineers
- Hardware installation engineers
- Commissioning engineers
- Maintenance engineers

Symbol Convention

The symbols that may be found in this document are defined as follows:

Symbol	Description
DANGER	Indicates a hazard with a high level of risk which, if not avoided, will result in death or serious injury.
WARNING	Indicates a hazard with a medium level of risk which, if not avoided, could result in death or serious injury.
CAUTION	Indicates a hazard with a low level of risk which, if not avoided, could result in minor or moderate injury.
NOTICE	Indicates a potentially hazardous situation which, if not avoided, could result in equipment damage, data loss, performance deterioration, or unanticipated results. **NOTICE** is used to address practices not related to personal injury.

 Copyright © Huawei Digital Power Technologies Co., Ltd.

Symbol	Description
NOTE	Supplements important information in the main text. **NOTE** is used to address information not related to personal injury, equipment damage, and environment deterioration.

Change History

Issue	Date	Description
25	2026-07-09	Optimized figures in **3.2.6.2 Bottom Cable Routing** and **3.2.7.1 Top Cable Routing**.
24	2026-05-13	• Updated the MDU dimensions in **2.3.6 MDU**. • Added precautions for cables in **3.2.5 Cable Routing Requirements**. • Added recommended values for the ambient temperature and humidity in **6.1 UPS Maintenance**. • Optimized the charging voltage requirements in **9.7 Battery Specifications**.

Issue	Date	Description
23	2025-10-30	• Optimized "General Requirements" in **1.4 Environmental Requirements**. • Added "Transportation Requirements" in **1.5 Mechanical Safety**. • Optimized the conceptual diagram in **2.2.1 Conceptual Diagram**. • Added the recommended specifications of the maintenance bypass circuit breaker in **3.1.3 Power Cables**. • Optimized the description of the DIP switch (02312PBL) in **4.1.4.4 Setting the Ambient T/H Sensor (02312PBL or 02310NBS)**. • Optimized the description of setting the ECO voltage range in **4.1.5.1 Setting ECO Mode**. • Optimized the procedure in **4.1.6 Starting the Inverter** and **4.2 Shutting Down and Powering Off the UPS**. • Highlighted the first-time startup in the title in **5.1 Starting a Parallel System for the First Time**. • Added **5.2 Starting the Inverters in a Parallel System**. • Added the context and the operations on the WebUI in **5.3 Shutting Down and Powering Off a Parallel System**. • Added **8.1 Logging In to the WebUI**. • Added the maximum number of parallel UPSs in **9.9 System Electrical Specifications**.

Issue	Date	Description
22	2025-04-30	• Added **3.2.4.3 Installing Ambient T/H Sensors and Cables (33010516)**. • Optimized the installation procedure in **3.2.4.4 Installing Ambient T/H Sensors and Cables (02312PBL or 02310NBS)**. • Added check items in **3.4 Verifying the installation**. • Optimized the procedure for activating the software version when the software version is incompatible in **4.1.2 Initial Startup**. • Added **4.1.3 User Names and Initial Passwords**. • Added **4.1.4.3 Setting the Ambient T/H Sensor (33010516)**. • Deleted the T/H sensor (02312PBL-002) in **4.1.4.4 Setting the Ambient T/H Sensor (02312PBL or 02310NBS)**. • Added **6.3 Lithium Battery Maintenance** and **6.4 Battery Test**.
21	2025-01-15	• Updated **2.3.3 Power Module**. • Updated **2.3.6 MDU**. • Modified the cable routing mode in **3.1.3 Power Cables**. • Optimized the description about step 1 in **3.2.4.4 Installing Ambient T/H Sensors and Cables (02312PBL or 02310NBS)**. • Added the description of power cable routing in **3.2.6 Routing Cables (400 kVA, 500 kVA, or 600 kVA UPS)** and **3.2.7 Routing Cables (800 kVA UPS)**. • Added the T/H sensor (02312PBL-002) in **4.1.4.4 Setting the Ambient T/H Sensor (02312PBL or 02310NBS)**. • Added precautions in **4.1.2 Initial Startup**. • Updated **5.1 Starting a Parallel System for the First Time**.

 Copyright © Huawei Digital Power Technologies Co., Ltd.

Issue	Date	Description
20	2024-09-18	• Updated **2.3.5.3 Dry Contact Card**. • Updated the 4G module appearance in **3.2.4.2 Installing a 4G Module or Network Cable**. • Updated **3.2.4.4 Installing Ambient T/H Sensors and Cables (02312PBL or 02310NBS)**. • Added the check items before power-on in **4.1.1 Power-On**. • Updated **5.1 Starting a Parallel System for the First Time**.
19	2024-01-30	• Updated **2.3.5.4 Monitoring Interface Card**. • Updated **3.2.4.4 Installing Ambient T/H Sensors and Cables (02312PBL or 02310NBS)**. • Updated **4.1.4.4 Setting the Ambient T/H Sensor (02312PBL or 02310NBS)**. • Updated **3.5 Sealing Cabinets**. • Updated **4.1.2 Initial Startup**.
18	2023-08-25	Updated the description about battery specifications.
17	2023-07-10	• Added **3.1.4 SPD**. • Updated **9 Technical Specifications**.
16	2022-12-30	Updated the description about initial startup.
15	2022-01-30	Updated the monitoring UIs.
14	2021-03-12	Updated the monitoring UIs.
13	2020-12-07	Updated the monitoring UIs.
12	2020-03-23	Adapted the UPS to lithium batteries and updated the monitoring UIs.
11	2019-12-20	Updated the safety information.
10	2019-11-11	Added SNMP descriptions to the sections about system settings and site configuration.
09	2019-10-16	Updated the instructions for startup over the app.
08	2019-08-15	Updated the monitoring UIs.
07	2019-02-27	Improved descriptions about the USB port.
06	2018-10-19	Updated some MDU screenshots.
05	2018-01-08	Added the instructions for startup over the app.
04	2017-10-30	Updated the output electrical specifications, product weight, and typical configuration.
03	2017-04-28	Updated some MDU screenshots.

Issue	Date	Description
02	2017-02-25	Updated the voltage and current data of the monitoring interface card.
01	2016-10-14	This issue is the first official release.

Contents

About This Document ii

1 Safety Information 1

1.1 Personal Safety 2
1.2 Equipment Safety 4
1.2.1 UPS Safety 4
1.2.2 Battery Safety 5
1.3 Electrical Safety 11
1.4 Environmental Requirements 15
1.5 Mechanical Safety 17

2 Product Overview 25

2.1 Model Description 25
2.2 Working Principle 26
2.2.1 Conceptual Diagram 26
2.2.2 Working Modes 27
2.2.2.1 Normal Mode 27
2.2.2.2 Bypass Mode 28
2.2.2.3 Battery Mode 29
2.2.2.4 Maintenance Bypass Mode 30
2.2.2.5 ECO Mode 31
2.3 Product Introduction 32
2.3.1 Appearance 33
2.3.2 Product Structure 36
2.3.3 Power Module 43
2.3.4 Bypass Module 45
2.3.5 Control Module 47
2.3.5.1 Overview 47
2.3.5.2 ECM 47
2.3.5.3 Dry Contact Card 49
2.3.5.4 Monitoring Interface Card 53
2.3.6 MDU 58
2.4 Typical Configurations 61
2.4.1 Single UPS 61

2.4.2 Parallel System 61
2.4.3 Dual-Bus System 62
2.5 Optional Components 63
3 Installation 65
3.1 Installation Preparations 65
3.1.1 Site 65
3.1.1.1 UPS Dimensions 65
3.1.1.2 Installation Environment 66
3.1.1.3 Installation Clearances 67
3.1.2 Tools 68
3.1.3 Power Cables 72
3.1.4 SPD 79
3.1.5 Transportation, Unpacking, and Checking 79
3.1.6 (Optional) Splitting the Power Cabinet and Bypass Cabinet (400 kVA, 500 kVA, or 600 kVA UPS) 80
3.1.7 (Optional) Combining the Power Cabinet and Bypass Cabinet (400 kVA, 500 kVA, or 600 kVA UPS) 86
3.2 Installing a Single UPS 87
3.2.1 Installing a UPS (400 kVA, 500 kVA, or 600 kVA UPS) 87
3.2.1.1 Installing the UPS on the Ground 88
3.2.1.2 Installing the UPS on Channel Steel 92
3.2.2 Installing a UPS (800 kVA) 93
3.2.2.1 Installing the UPS on the Ground 93
3.2.2.2 Installing the UPS on Channel Steel 103
3.2.3 Installing Batteries 104
3.2.4 Installing Optional Components 105
3.2.4.1 Installing an IP21 Component 105
3.2.4.2 Installing a 4G Module or Network Cable 106
3.2.4.3 Installing Ambient T/H Sensors and Cables (33010516) 109
3.2.4.4 Installing Ambient T/H Sensors and Cables (02312PBL or 02310NBS) 113
3.2.4.5 Connecting the BCB Box 116
3.2.4.6 Connecting the BBB Box 116
3.2.4.7 Installing a Battery Grounding Failure Detector 116
3.2.5 Cable Routing Requirements 118
3.2.6 Routing Cables (400 kVA, 500 kVA, or 600 kVA UPS) 120
3.2.6.1 Top Cable Routing 121
3.2.6.2 Bottom Cable Routing 131
3.2.7 Routing Cables (800 kVA UPS) 138
3.2.7.1 Top Cable Routing 139
3.2.7.2 Bottom Cable Routing 146
3.2.8 Connecting a Remote EPO Switch 154
3.2.9 Connecting Communications Cables 155
3.3 Installing a Parallel System 155

3.3.1 Connecting Power Cables....155
3.3.2 Connecting Signal Cables....160
3.4 Verifying the installation....162
3.5 Sealing Cabinets....167

4 Single UPS Commissioning....169

4.1 Powering On and Starting the UPS....169
4.1.1 Power-On....169
4.1.2 Initial Startup....170
4.1.3 User Names and Initial Passwords....173
4.1.4 Setting Parameters for Optional Components....174
4.1.4.1 Accessing iManager-M Service....175
4.1.4.2 Setting Parameters for the BCB Box....178
4.1.4.3 Setting the Ambient T/H Sensor (33010516)....178
4.1.4.4 Setting the Ambient T/H Sensor (02312PBL or 02310NBS)....181
4.1.4.5 Setting the Backfeed Protection Card....186
4.1.5 Mode Settings....186
4.1.5.1 Setting ECO Mode....186
4.1.5.2 Setting the Hibernation Mode....188
4.1.6 Starting the Inverter....190
4.1.7 Powering On Loads....190
4.2 Shutting Down and Powering Off the UPS....191

5 Parallel System Commissioning....193

5.1 Starting a Parallel System for the First Time....193
5.2 Starting the Inverters in a Parallel System....198
5.3 Shutting Down and Powering Off a Parallel System....199
5.4 Performing EPO....200
5.5 Commissioning a Dual-Bus System....200

6 Maintenance....203

6.1 UPS Maintenance....205
6.2 Lead-Acid Battery Maintenance....209
6.3 Lithium Battery Maintenance....214
6.4 Battery Test....214
6.4.1 Lead-Acid Battery Test....214
6.4.1.1 Performing a Forced Equalized Charging Test....214
6.4.1.2 Performing a Shallow Discharge Test....215
6.4.1.3 Performing a Capacity Test....217
6.4.2 Lithium Battery Test....218
6.4.2.1 Performing a Shallow Discharge Test....218
6.4.2.2 Performing a Capacity Test....220
6.4.3 Downloading the Test Data....221

7 Troubleshooting....222

8 FAQs ... 225
8.1 Logging In to the WebUI ... 225
8.2 Cold-Starting the UPS Using Batteries ... 226
8.3 Transferring to Maintenance Bypass Mode ... 227
8.4 Transferring from Maintenance Bypass Mode to Normal Mode ... 229
8.5 Transferring to Bypass Mode ... 229
8.6 Performing EPO ... 230
8.7 Clearing the EPO State ... 230
8.8 Exporting Data ... 231
8.9 Obtaining Active Alarm Details ... 232
8.10 Spare Parts Authorization ... 232
9 Technical Specifications ... 233
9.1 Physical Specifications ... 233
9.2 Internal Switch Specifications ... 233
9.3 Environmental Specifications ... 234
9.4 Safety and EMC ... 234
9.5 Mains Input Electrical Specifications ... 235
9.6 Bypass Input Electrical Specifications ... 236
9.7 Battery Specifications ... 236
9.8 Output Electrical Specifications ... 237
9.9 System Electrical Specifications ... 238
A (Optional) TN-C System Application ... 240
B User Interface ... 242
C Alarm List ... 243
D Acronyms and Abbreviations ... 244

1 Safety Information

Statement

Before transporting, storing, installing, operating, using, and/or maintaining the equipment, read this document, strictly follow the instructions provided herein, and follow all the safety instructions on the equipment and in this document. In this document, "equipment" refers to the products, software, components, spare parts, and/or services related to this document; "the Company" refers to the manufacturer (producer), seller, and/or service provider of the equipment; "you" refers to the entity that transports, stores, installs, operates, uses, and/or maintains the equipment.

The **DANGER**, **WARNING**, **CAUTION**, and **NOTICE** statements described in this document do not cover all the safety precautions. You also need to comply with relevant international, national, or regional standards and industry practices. **The Company shall not be liable for any consequences that may arise due to violations of safety requirements or safety standards concerning the design, production, and usage of the equipment.**

The equipment shall be used in an environment that meets the design specifications. Otherwise, the equipment may be faulty, malfunctioning, or damaged, which is not covered under the warranty. The Company shall not be liable for any property loss, personal injury, or even death caused thereby.

Comply with applicable laws, regulations, standards, and specifications during transportation, storage, installation, operation, use, and maintenance.

Do not perform reverse engineering, decompilation, disassembly, adaptation, implantation, or other derivative operations on the equipment software. Do not study the internal implementation logic of the equipment, obtain the source code of the equipment software, violate intellectual property rights, or disclose any of the performance test results of the equipment software.

The Company shall not be liable for any of the following circumstances or their consequences:

- Equipment damage due to force majeure such as earthquakes, floods, volcanic eruptions, debris flows, lightning strikes, fires, wars, armed conflicts, typhoons, hurricanes, tornadoes, and other extreme weather conditions
- Operation beyond the conditions specified in this document

 Copyright © Huawei Digital Power Technologies Co., Ltd.

- Installation or use in environments that do not comply with international, national, or regional standards
- Installation or use by unqualified personnel
- Failure to follow the operation instructions or safety precautions on the product or in this document
- Unauthorized modifications to the product or software code or removal of the product
- Damage caused during transportation by you or a third party authorized by you
- Storage conditions that do not meet the requirements specified in this document
- Failure to comply with local laws, regulations, or related standards due to the materials and tools prepared by you
- Damage caused by your or a third party's negligence, intentional breach, gross negligence, or improper operations or damage not caused by the Company

1.1 Personal Safety

DANGER

Ensure that power is off during installation. Do not install or remove a cable with power on. Transient contact between the core of the cable and the conductor will generate electric arcs or sparks, which may cause a fire or personal injury.

DANGER

Non-standard and improper operations on the energized equipment may cause fire or electric shocks, resulting in property damage, personal injury, or even death.

DANGER

Before operations, remove conductive objects such as watches, bracelets, bangles, rings, and necklaces to prevent electric shocks.

DANGER

During operations, use dedicated insulated tools to prevent electric shocks or short circuits. The dielectric withstanding voltage level must comply with local laws, regulations, standards, and specifications.

WARNING

During operations, wear personal protective equipment such as protective clothing, insulated shoes, goggles, safety helmets, and insulated gloves.

Figure 1-1 Personal protective equipment

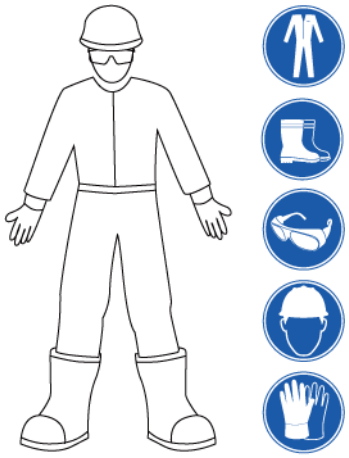

General Requirements

- Do not stop protective devices. Pay attention to the warnings, cautions, and related precautionary measures in this document and on the equipment.
- If there is a likelihood of personal injury or equipment damage during operations, immediately stop, report the case to the supervisor, and take feasible protective measures.
- Do not power on the equipment before it is installed or confirmed by professionals.
- Do not touch the power supply equipment directly or with conductors such as damp objects. Before touching any conductor surface or terminal, measure the voltage at the contact point to ensure that there is no risk of electric shock.
- Do not touch a running fan with your hands, components, screws, tools, or boards. Otherwise, personal injury or equipment damage may occur.
- In the case of a fire, immediately leave the building or the equipment area and activate the fire alarm or call emergency services. Do not enter the affected building or equipment area under any circumstances.
- It is recommended that a fresh air system be configured for the space where the equipment is located. If no fresh air system is configured, it is recommended that the room be ventilated before O&M personnel enter the room to avoid safety problems caused by oxygen deficiency.

Personnel Requirements

- Only professionals and trained personnel are allowed to operate the equipment.
  - Professionals: personnel who are familiar with the working principles and structure of the equipment, trained or experienced in equipment

operations and are clear of the sources and degree of various potential hazards in equipment installation, operation, maintenance

  - Trained personnel: personnel who are trained in technology and safety, have required experience, are aware of possible hazards on themselves in certain operations, and are able to take protective measures to minimize the hazards on themselves and other people
- Personnel who plan to install or maintain the equipment must receive adequate training, be able to correctly perform all operations, and understand all necessary safety precautions and local relevant standards.
- Only qualified professionals or trained personnel are allowed to install, operate, and maintain the equipment.
- Only qualified professionals are allowed to remove safety facilities and inspect the equipment.
- Personnel who will perform special tasks such as electrical operations, working at heights, and operations of special equipment must possess the required local qualifications.
- Only authorized professionals are allowed to replace the equipment or components (including software).
- Only personnel who need to work on the equipment are allowed to access the equipment.

1.2 Equipment Safety

1.2.1 UPS Safety

General Requirements

NOTICE

This is a category C3 UPS product for commercial and industrial application in the second environment – installation restrictions or additional measures may be needed to prevent disturbances.

- The UPS is used for commercial and industrial purposes only. It cannot be used as a power supply for life support devices.
- For power supply systems that are critical to significant economic interests or public order, such as the national computing center, emergency command center, railway signal system and control center, civil aviation and air traffic control center, airport command center, financial clearing center, and transaction center, the Tier 4 or 3 power architecture specified in TIA-942 must be used. That is, two power supplies must be used to supply power to loads.
- The UPS shall not be located in non-confined environments within 0–3.7 km away from the ocean or indoor or semi-indoor environments where the temperature and humidity are not controllable, such as shelters, civil houses, garages, corridors, and direct ventilation cabinets near the ocean; or houses with only roofs, railway station platforms, gymnasiums, and aquariums.

- It is recommended that the UPS be powered on as soon as possible after it is unpacked.
- The UPS can be used to serve resistive-capacitive loads, resistive loads, and micro-inductive loads. It is recommended that the UPS not be used for pure capacitive loads, pure inductive loads, or half-wave rectification loads. The UPS does not apply to regeneration loads.
- Mains and bypass backfeed may occur in the UPS. The UPS can be configured with a backfeed protection dry contact to work with the corresponding circuit breaker, preventing the voltage from flowing back to input terminals. If the installation and maintenance personnel do not need backfeed protection, attach labels on the corresponding circuit breakers, informing that the circuit is connected to the UPS. Isolate the device before operating the circuit.
- The upstream power distribution of the UPS must meet the requirements of protection against electric shock specified in IEC 60364-4-41.
- A circuit breaker equipped with a residual current device (RCD) is not recommended.
- If the root mean square (RMS) of a phase voltage of the utility power exceeds 320 V AC, the UPS may be damaged.
- To ensure power supply to loads during UPS upgrade, set the output to maintenance bypass mode. To avoid power failure or load damage, ensure that the bypass input is within the specified power supply range.
- Exercise caution when manually shutting down the UPS inverter for transferring to bypass mode, or when adjusting the UPS output voltage level or output frequency. Doing so may affect the power supply to equipment.

1.2.2 Battery Safety

DANGER

Do not connect the positive and negative poles of a battery or battery string together. Otherwise, the battery may be short-circuited. Battery short circuits can generate high instantaneous current and releases a large amount of energy, which may cause battery leakage, smoke, flammable gas release, thermal runaway, fire, or explosion. To avoid battery short circuits, do not maintain batteries with power on.

DANGER

Do not expose batteries at high temperatures or around heat sources, such as scorching sunlight, fire sources, transformers, and heaters. Battery overheating may cause leakage, smoke, flammable gas release, thermal runaway, fire, or explosion.

DANGER

Protect batteries from mechanical vibration, falling, collision, punctures, and strong impact. Otherwise, the batteries may be damaged or catch fire.

 Copyright © Huawei Digital Power Technologies Co., Ltd.

DANGER

To avoid leakage, smoke, flammable gas release, thermal runaway, fire, or explosion, do not disassemble, alter, or damage batteries, for example, insert foreign objects into batteries, squeeze batteries, or immerse batteries in water or other liquids.

DANGER

There is a risk of fire or explosion if the model of the battery in use or used for replacement is incorrect. Use a battery of the model recommended by the manufacturer.

DANGER

Battery electrolyte is toxic and volatile. Do not get contact with leaked liquids or gases in the case of battery leakage or emission of abnormal odor. In such cases, stay away from the battery and contact professionals immediately. Professionals shall wear safety goggles, rubber gloves, gas masks, and protective clothing, power off the equipment, remove the battery, and contact technical engineers.

DANGER

A battery is an enclosed system and will not release any gases under normal operations. If a battery is improperly treated, for example, burnt, needle-pricked, squeezed, struck by lightning, overcharged, or subject to other adverse conditions that may cause battery thermal runaway, the battery may be damaged or an abnormal chemical reaction may occur inside the battery, resulting in electrolyte leakage or production of gases such as CO and H_2. To prevent fire or device corrosion, ensure that flammable gas is properly exhausted.

DANGER

The gas generated by a burning battery may irritate your eyes, skin, and throat. Take protective measures promptly.

WARNING

Install batteries in a dry area. Do not install them under areas prone to water leakage, such as air conditioner vents, ventilation vents, feeder windows of the equipment room, or water pipes. Ensure that no liquid enters the equipment to prevent faults or short circuits.

WARNING

Before installing and commissioning batteries, prepare fire fighting facilities, such as fire sand and carbon dioxide fire extinguishers, according to construction standards and regulations. Before putting the battery room into operation, ensure that it is equipped with a fire extinguishing system that complies with local laws and regulations, has been constructed and commissioned, and can work in automatic or manual control mode.

WARNING

Before unpacking, storage, and transportation, ensure that the packing cases are intact and the batteries are correctly placed according to the labels on the packing cases. Do not place a battery upside down or vertically, lay it on one side, or tilt it. Stack the batteries according to the stacking requirements on the packing cases. Ensure that the batteries do not fall or get damaged. Otherwise, they will need to be scrapped.

WARNING

After unpacking batteries, place them in the required direction. Do not place a battery upside down or vertically, lay it on one side, tilt it, or stack it. Ensure that the batteries do not fall or get damaged. Otherwise, they will need to be scrapped.

WARNING

Tighten the screws on copper bars or cables to the torque specified in this document. Periodically confirm whether the screws are tightened, check for rust, corrosion, or other foreign objects, and clean them up if any. Loose screw connections will result in excessive voltage drops and batteries may catch fire when the current is high.

WARNING

After batteries are discharged, charge them in time to avoid damage due to overdischarge.

WARNING

If the electrolyte leaks, absorb and neutralize the electrolyte immediately. Exercise caution when moving or handling a lead-acid battery with electrolyte leakage to avoid electrolyte hazards.

 Copyright © Huawei Digital Power Technologies Co., Ltd.

WARNING

Lead-acid batteries in use emit flammable gas. Ensure that batteries are installed in a well-ventilated area and fireproof measures are taken.

WARNING

Do not use unsealed lead-acid batteries.

Statement

The Company shall not be liable for any battery damage, personal injury, death, property loss, and/or other consequences caused by the following reasons:

- Force majeure such as earthquakes, floods, volcanic eruptions, debris flows, lightning strikes, fires, wars, armed conflicts, typhoons, hurricanes, tornadoes, and other extreme weather conditions
- The battery warranty period has expired.
- Actions that do not follow instructions in the user manual or direct advice from the Company, including but not limited to the following scenarios:
  - The onsite equipment storage and operating environment or external power parameters do not meet the environment requirements for normal operation, for example, the actual operating temperature of batteries is too high or too low, or the power grid is unstable and experiences outages frequently.
  - Batteries are dropped or incorrectly operated or connected.
  - Batteries are overdischarged due to delayed acceptance or power-on after battery installation.
  - Battery running parameters are incorrectly set.
  - Different types of batteries, for example, batteries of different brands or rated capacities, are used together without prior approval from the Company.
  - Batteries are frequently overdischarged due to improper battery maintenance.
  - Battery use scenarios are changed without prior approval from the Company.
  - Battery maintenance is not performed according to the instructions in the user manual, for example, failing to check battery terminals regularly.
  - Batteries are not transported, stored, or charged according to the instructions in the user manual.
  - Instructions from the Company are not followed during battery relocation or reinstallation.

 Copyright © Huawei Digital Power Technologies Co., Ltd.

General Requirements

NOTICE

This is a category C3 battery product for commercial and industrial application in the second environment – installation restrictions or additional measures may be needed to prevent disturbances.

NOTICE

To ensure battery safety and battery management accuracy, use batteries provided by the Company. The Company is not responsible for any faults of batteries not provided by it.

- Before installing, operating, and maintaining batteries, read the battery manufacturer's instructions and comply with their requirements. The safety precautions specified in this document are highly important and require special attention. For additional safety precautions, see the instructions provided by the battery manufacturer.
- Use batteries within the specified temperature range. When the ambient temperature of the batteries is lower than the allowed range, do not charge the batteries to prevent internal short circuits caused during low-temperature charging.
- Do not reversely connect the positive and negative battery terminals. Otherwise, a battery alarm will be generated and batteries may be damaged.
- To prevent dust buildup from damaging the equipment, install battery modules only after dust-prone operations in the equipment room are completed.
- Before unpacking batteries, check whether the packaging is intact. Do not use batteries with damaged packaging. If any damage is found, notify the carrier and manufacturer immediately.
- Do not unpack batteries in an environment where the temperature and humidity are uncontrollable. Before unpacking batteries, keep them still for 24 hours in an environment where the temperature and humidity are under control.
- In an indoor scenario, you are advised to power on batteries within seven days after unpacking. If the batteries cannot be powered on in time, put them in the original packaging and place them in a dry indoor environment without corrosive gases.
- Batteries shall not be located in non-confined environments within 0–3.7 km away from the ocean or indoor or semi-indoor environments where the temperature and humidity are not controllable, such as shelters, civil houses, garages, corridors, and direct ventilation cabinets near the ocean; or houses with only roofs, railway station platforms, gymnasiums, and aquariums.
- Do not use a damaged battery (such as damage caused when a battery is dropped, bumped, bulged, or dented on the enclosure), because the damage may cause electrolyte leakage or flammable gas release. In the case of

electrolyte leakage or structural deformation, contact the installer or professional O&M personnel immediately to remove or replace the battery. Do not store the damaged battery near other devices or flammable materials and keep it away from non-professionals.

- Before working on a battery, ensure that there is no irritating or burning smell around the battery.
- When installing batteries, do not place installation tools, metal parts, or sundries on the batteries. After the installation is complete, clean up the objects on the batteries and the surrounding area.
- To safeguard against water intrusion and subsequent battery carbonization, ensure that the bottom of a battery remains at least 10 cm above ground level.
- If batteries are exposed to water accidentally, do not install them. Instead, transport the batteries to a safe isolation point and contact technical engineers in a timely manner.
- Check whether the positive and negative battery terminals are grounded unexpectedly. If so, disconnect the battery terminals from the ground.
- Do not perform welding or grinding work around batteries to prevent fire caused by electric sparks or arcs.
- If batteries are left unused for a long period of time, store and charge them according to the battery requirements.
- Do not charge or discharge batteries by using a device that does not comply with local laws and regulations.
- Keep the battery loop disconnected during installation and maintenance.
- Monitor damaged batteries during storage for signs of smoke, flame, electrolyte leakage, or heat.
- If a battery is faulty, its surface temperature may be high. Do not touch the battery to avoid scalds.

Short-Circuit Protection

- When installing and maintaining batteries, wrap the exposed cable terminals on the batteries with insulation tape.
- Avoid foreign objects (such as conductive objects, screws, and liquids) from entering a battery, as this may cause short circuits.

Leakage Handling

NOTICE

Electrolyte leakage may damage the equipment. It will corrode metal parts and boards, and ultimately damage the boards.

Electrolyte is corrosive and can cause irritation and chemical burns. If you come into direct contact with the battery electrolyte, do as follows:

- Inhalation: Evacuate from contaminated areas, get fresh air immediately, and seek immediate medical attention.

- Eye contact: Immediately wash your eyes with water for at least 15 minutes, do not rub your eyes, and seek immediate medical attention.
- Skin contact: Wash the affected areas immediately with soap and water and seek immediate medical attention.
- Intake: Seek immediate medical attention.

NOTICE

Special requirements for lead-acid batteries:

- When the battery temperature exceeds 60°C, check whether the electrolyte leaks. If the electrolyte leaks, take proper measures promptly.
- If the electrolyte leaks, follow the instructions of the battery manufacturer or use sodium bicarbonate ($NaHCO_3$) or sodium carbonate (Na_2CO_3) to neutralize the electrolyte.

Recycling

- Dispose of waste batteries in accordance with local laws and regulations. Do not dispose of batteries as household waste. Improper disposal of batteries may result in environmental pollution or an explosion.
- If a battery leaks or is damaged, contact technical support or a battery recycling company for disposal.
- If batteries are out of service life, contact a battery recycling company for disposal.
- Do not expose waste batteries to high temperatures or direct sunlight.
- Do not place waste batteries in environments with high humidity or corrosive substances.
- Do not use faulty batteries. Contact a battery recycling company to scrap them as soon as possible to avoid environmental pollution.

1.3 Electrical Safety

DANGER

Before connecting cables, ensure that the equipment is intact. Otherwise, electric shocks or fires may occur.

DANGER

Non-standard and improper operations may result in fire or electric shocks.

DANGER

Prevent foreign matter from entering the equipment during operations. Otherwise, short circuits, equipment damage, load power derating, power failure, or personal injury may occur.

WARNING

For the equipment that needs to be grounded, install the ground cable first when installing the equipment and remove the ground cable last when removing the equipment.

CAUTION

Do not route cables near the air intake or exhaust vents of the equipment.

CAUTION

Do not directly connect aluminum cables to prevent electrochemical corrosion of copper and aluminum.

CAUTION

Stay away from the equipment when preparing cables to prevent cable scraps from entering the equipment. Cable scraps may cause sparks and result in personal injury and equipment damage.

General Requirements

- Follow the procedures described in the document for installation, operation, and maintenance. Do not modify, retrofit, or alter the equipment without authorization (including, but not limited to, adding or removing components and cables), and do not change the installation sequence.
- Install temporary fences or warning ropes and hang "No Entry" signs around the operation area to keep unauthorized personnel away from the area.
- Before installing or removing power cables, turn off the switches of the equipment and its upstream and downstream switches.
- If any liquid is detected inside the equipment, disconnect the power supply immediately and do not use the equipment.
- Before performing operations on the equipment, check that all tools meet the requirements and record the tools. After the operations are complete, collect all of the tools to prevent them from being left inside the equipment.
- Before installing power cables, check that cable labels are correct and cable terminals are insulated.

- When installing the equipment, use a torque tool of a proper measurement range to tighten the screws. When using a wrench to tighten the screws, ensure that the wrench does not tilt and the torque error does not exceed 10% of the specified value.
- Ensure that bolts are tightened with a torque tool and marked in red and blue after double-check. Installation personnel mark tightened bolts in blue. Quality inspection personnel confirm that the bolts are tightened and then mark them in red. (The marks must cross the edges of the bolts.)

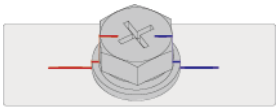

- After the installation is complete, ensure that protective cases, insulation tubes, and other necessary items for all electrical components are in position to avoid electric shocks.
- If the equipment has multiple inputs, disconnect all the inputs and wait until the equipment is completely powered off before performing operations on the equipment.
- Before maintaining a downstream electrical or power distribution device, turn off the output switch on the power supply equipment.
- During equipment maintenance, attach "No switching on" labels near the upstream and downstream switches or circuit breakers as well as warning signs to prevent accidental connection. The equipment can be powered on only after troubleshooting is complete.
- If fault diagnosis and troubleshooting need to be performed after power-off, take the following safety measures: Disconnect the power supply. Check whether the equipment is live. Install a ground cable. Hang warning signs and set up fences.
- Check equipment connections periodically, ensuring that all screws are securely tightened.
- Only qualified professionals can replace a damaged cable.
- Do not scrawl, damage, or block any labels or nameplates on the equipment. Promptly replace labels that have worn out.
- Do not use solvents such as water, alcohol, or oil to clean electrical components inside or outside of the equipment.
- Wear personal protective equipment and use dedicated insulated tools to avoid electric shocks or short circuits.
- Do not use wet cloth to clean exposed copper bars or other conductive parts.

Grounding

- Ensure that the grounding impedance of the equipment complies with local electrical standards.
- Ensure that the equipment is connected permanently to the protective ground. Before operating the equipment, check its electrical connection to ensure that it is reliably grounded.
- Ensure that the protective earth of the equipment is reliably connected to the ground screw of the metal enclosure (resistance of a bond: ≤ 0.1 ohms).

- Ensure that the ground resistance of the system for surge protection is less than or equal to 10 ohms.
- Do not operate the equipment in the absence of a properly installed ground conductor.
- Do not damage the ground conductor.
- If high touch current may occur on the equipment, ground the protective ground terminal on the equipment enclosure before connecting the power supply; otherwise, electric shock as a result of touch current may occur.

Cabling

- When selecting, installing, and routing cables, follow local safety regulations and rules.
- The flame spread rating of cables shall meet the UL 1581 VW-1 or IEC 60332-3-22 (ZB) or higher requirements.
- When routing power cables, ensure that there is no coiling or twisting. Do not join or weld power cables. If necessary, use a longer cable.
- Ensure that all cables are properly connected and insulated, and meet specifications.
- Ensure that the cables are protected from mechanical stress, overheating, and corrosion.
- Ensure that cables are not squeezed, torn, warped, or whitened.
- Ensure that the slots and holes for routing cables are free from sharp edges, and that the positions where cables are routed through pipes or cable holes are equipped with cushion materials to prevent the cables from being damaged by sharp edges or burrs.
- If a cable is routed into the cabinet from the top, bend the cable in a U shape outside the cabinet and then route it into the cabinet.
- Ensure that cables of the same type are bound together neatly and straight and that the cable sheath is intact. When routing cables of different types, ensure that they are at least 30 mm away from each other without entanglement and overlapping.
- If the external conditions (such as the cable layout or ambient temperature) change, verify the cable usage in accordance with the IEC-60364-5-52 or local laws and regulations. For example, check that the current-carrying capacity meets requirements.
- When routing cables, reserve at least 30 mm clearance between the cables and heat-generating components or areas. This prevents deterioration or damage to the cable insulation layer.
- When the temperature is low, violent impact or vibration may damage the plastic cable sheathing. To ensure safety, comply with the following requirements:
  - Cables can be laid or installed only when the temperature is higher than 0°C. Handle cables with caution, especially at a low temperature.
  - Cables stored at below 0°C must be stored at room temperature for more than 24 hours before they are laid out.
- Do not perform any improper operations, for example, dropping cables directly from a vehicle. Otherwise, the cable performance may deteriorate due

to cable damage, which affects the current-carrying capacity and temperature rise.

ESD

NOTICE

The static electricity generated by human bodies may damage the electrostatic-sensitive components on boards, for example, the large-scale integrated (LSI) circuits.

- When touching the equipment and handling boards, modules with exposed circuit boards, or application-specific integrated circuits (ASICs), observe ESD protection regulations and wear ESD clothing and ESD gloves or a well-grounded ESD wrist strap.

  Figure 1-2 Wearing an ESD wrist strap

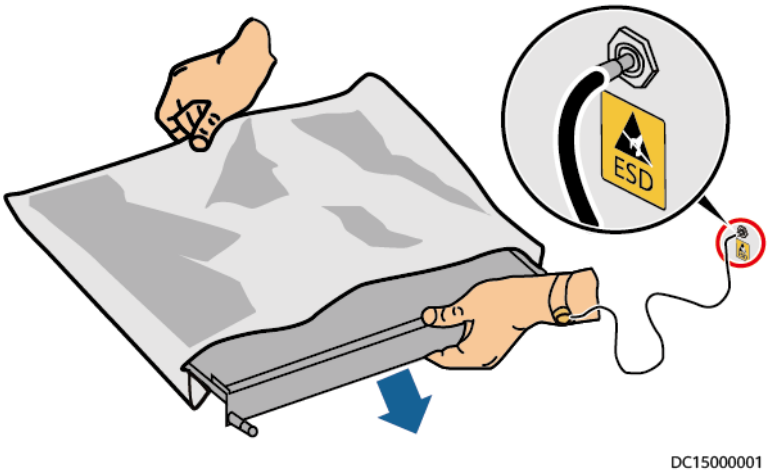

- When holding a board or a module with exposed circuit boards, hold its edge without touching any components. Do not touch the components with bare hands.
- Package boards or modules with ESD packaging materials before storing or transporting them.

1.4 Environmental Requirements

DANGER

Do not expose the equipment to flammable or explosive gas or smoke. Do not perform any operation on the equipment in such environments.

DANGER

Do not store any flammable or explosive materials in the equipment area.

DANGER

Do not place the equipment near heat sources or fire sources, such as smoke, candles, heaters, or other heating devices. Overheating may damage the equipment or cause a fire.

WARNING

Install the equipment in an area far away from liquids. Do not install it under areas prone to condensation, such as under water pipes and air exhaust vents, or areas prone to water leakage, such as air conditioner vents, ventilation vents, or feeder windows of the equipment room. Ensure that no liquid enters the equipment to prevent faults or short circuits.

WARNING

To prevent damage or fire due to high temperature, ensure that the ventilation vents or heat dissipation systems are not obstructed or covered by other objects while the equipment is running.

General Requirements

- Ensure that the equipment is stored in a clean, dry, and well ventilated area with proper temperature and humidity and is protected from dust and condensation.
- Keep the installation and operating environments of the equipment within the allowed ranges. Otherwise, its performance and safety will be compromised.
- Do not install, use, or operate outdoor equipment and cables (including but not limited to moving equipment, operating equipment and cables, inserting connectors to or removing connectors from signal ports connected to outdoor facilities, working at heights, performing outdoor installation, and opening doors) in harsh weather conditions such as lightning, rain, snow, and level 6 or stronger wind.
- Do not place the equipment in an environment with direct sunlight, sand, dust, smoke, volatile or corrosive gases (such as sulfides, sulfur dioxide, acid mist), infrared and other radiations, organic solvents, or salty air.
- Do not place the equipment in an environment with conductive dust (such as metal dust, graphite, carbon fibers, conductive fibers) or magnetic dust.
- Do not place the equipment in an area conducive to the growth of microorganisms such as fungus or mildew.
- Do not place the equipment in an area with strong vibration, noise, or electromagnetic interference.

 Copyright © Huawei Digital Power Technologies Co., Ltd.

- Ensure that the site complies with local laws, regulations, and related standards.
- Ensure that the ground in the installation environment is solid, free from spongy or soft soil, and not prone to subsidence. The site must not be located in a low-lying land prone to water or snow accumulation, and the horizontal level of the site must be above the highest water level of that area in history.
- Before opening doors during the installation, operation, and maintenance of the equipment, clean up any foreign objects on the top of the equipment to prevent foreign objects from falling into the equipment.
- When installing the equipment, ensure that the installation surface is solid enough to bear the weight of the equipment.
- Ensure that the equipment room provides good heat insulation, and that the walls and floor are dampproof.
- Install protective devices at the door of the equipment room to prevent rodents and insects from entering the room.
- All cable holes must be sealed. Seal the used cable holes with insulated sealing putty. Seal the unused cable holes with the caps delivered with the equipment. It is prohibited to use conductive sealing putty. The following figure shows the criteria for correct sealing with sealing putty.

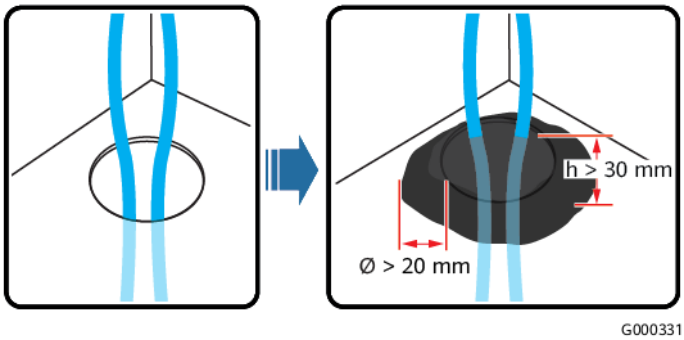

- After installing the equipment, remove the packing materials such as cartons, foam, plastics, and cable ties from the equipment area.
- Do not perform construction that will adversely affect the operating environment of the equipment during equipment operation, such as construction that generates dust, scraps, water mist, strong vibration, and corrosive materials. If such construction cannot be avoided, power off the equipment and take protective measures before the construction. Power on the equipment after the construction is complete and the construction site is cleaned up.

1.5 Mechanical Safety

DANGER

When working at heights, wear a safety helmet and safety harness or waist belt and fasten it to a solid structure. Do not mount it on an insecure moveable object or a metal object with sharp edges. Make sure that the hooks will not slide off.

WARNING

Ensure that all necessary tools are ready and inspected by a professional organization. Do not use tools that have signs of scratches or fail to pass the inspection or whose inspection validity period has expired. Ensure that the tools are secure and not overloaded.

WARNING

Before installing equipment in a cabinet, ensure that the cabinet is securely fastened with a balanced center of gravity. Otherwise, tipping or falling cabinets may cause bodily injury and equipment damage.

WARNING

When pulling equipment out of a cabinet, be aware of unstable or heavy objects in the cabinet to prevent injury.

WARNING

Do not drill holes into the equipment. Doing so may affect the sealing performance and electromagnetic containment of the equipment and damage components or cables inside. Metal shavings from drilling may short-circuit boards inside the equipment.

General Requirements

- Repaint any paint scratches caused during equipment transportation or installation in a timely manner. Equipment with scratches must not be exposed for an extended period of time.
- Do not perform operations such as arc welding and cutting on the equipment without evaluation by the Company.
- Do not install other devices on the top of the equipment without evaluation by the Company.
- When performing operations over the top of the equipment, take measures to protect the equipment against damage.
- Use correct tools and operate them in the correct way.

Transportation Requirements

- Use a forklift to transport the cabinet and ensure that the cabinet is in the vertical position. Do not manually load or unload the cabinet.
- Do not load the equipment using flatbed vehicles, dropside vehicles, vehicles that cannot be fitted with protective ropes in the cargo compartment, or other open transport vehicles.

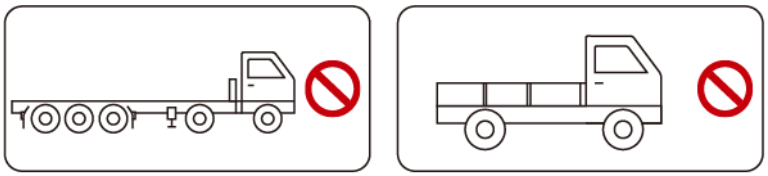

- Load the equipment using vehicles with cargo compartments, tailboards, and capability of installing protective ropes.

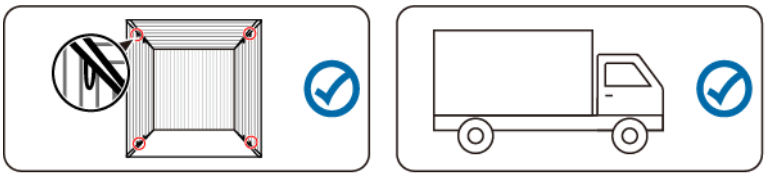

- The bottom of the vehicle cargo compartment or container shall be intact and flat without a wavy structure, and the inner wall of the cargo compartment shall be smooth to prevent equipment damage due to displacement or tilting.
- The Company is not liable for any loss caused by customer self-pickup or using a vehicle that does not meet the transportation requirements.
- Secure the equipment using the protective ropes in the cargo compartment to prevent it from moving during transportation. Use cross lashing (preventing forward and backward displacement) or vertical loop lashing (preventing leftward and rightward displacement) to secure the equipment. The equipment shall be protected by filling honeycomb cardboards or dunnage bags, transporting it with pallets, or securing it with packing straps.

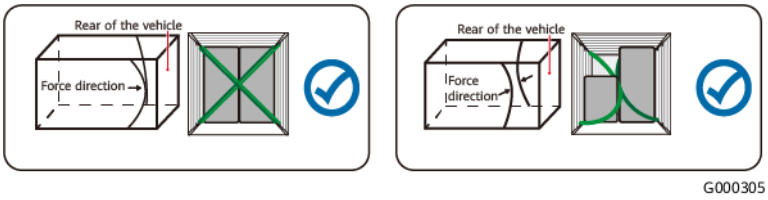

- Choose sea or roads in good conditions for transportation. Do not transport the equipment by railway or air. Avoid tilt or jolt during transportation.

Moving Heavy Objects

- Be cautious to prevent injury when moving heavy objects.

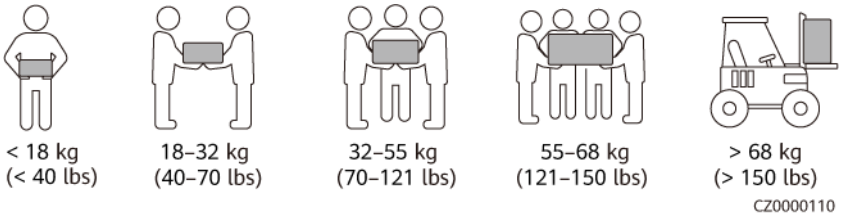

- If multiple persons need to move a heavy object together, determine the manpower and work division with consideration of height and other conditions to ensure that the weight is equally distributed.
- If two persons or more move a heavy object together, ensure that the object is lifted and landed simultaneously and moved at a uniform pace under the supervision of one person.

- Wear personal protective gears such as protective gloves and shoes when manually moving the equipment.
- To move an object by hand, approach to the object, squat down, and then lift the object gently and stably by the force of the legs instead of your back. Do not lift it suddenly or turn your body around.
- Move or lift the equipment by holding its handles or lower edges. Do not hold the handles of modules that are installed in the equipment.
- Do not quickly lift a heavy object above your waist. Place the object on a workbench that is half-waist high or any other appropriate place, adjust the positions of your palms, and then lift it.
- Move a heavy object stably with balanced force at an even and low speed. Put down the object stably and slowly to prevent any collision or drop from scratching the surface of the equipment or damaging the components and cables.
- When moving a heavy object, be aware of the workbench, slope, staircase, and slippery places. When moving a heavy object through a door, ensure that the door is wide enough to move the object and avoid bumping or injury.
- When transferring a heavy object, move your feet instead of turning your waist around. When lifting and transferring a heavy object, ensure that your feet point to the target direction of movement.
- When using a forklift to move the equipment, ensure that the forklift can carry at least 1.5 times the weight of the equipment. Preferentially use the wide side of the forklift to move the equipment. Ensure that the forklift arms are extended and the forklift arms are symmetrically placed on both sides of the pallet to avoid tilting due to imbalance.
- When using a forklift to move the equipment, secure the equipment to the forklift with ropes before moving the equipment.
- When using a forklift to move the equipment, assign a dedicated person to monitor the movement. In risk scenarios such as turning and speed bump passing, ensure that the forklift speed does not exceed 5 km/h and take auxiliary measures (such as binding belts) to prevent the equipment from falling over.
- Ensure that tilt angle of the cabinet meets the requirements shown in the figure. The tilt angle α of a cabinet with packaging must be less than or equal to 15°. After the cabinet is unpacked, its tilt angle α must be less than or equal to 10°.

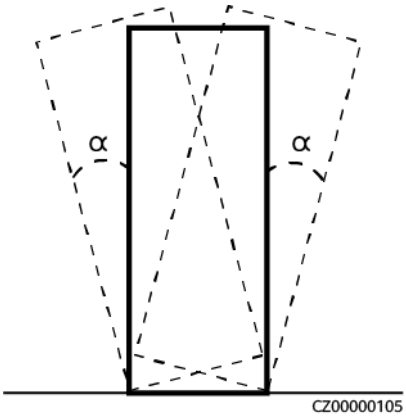

- When the slope angle is less than or equal to 5°, one person needs to assist the moving of the cabinet on the left and right sides. The tilt angle of the cabinet must not exceed 10° in any direction (front, rear, left, or right).
- When the slope angle is between 5° and 10°, take anti-tilt measures (for example, assist the moving of the cabinet with multiple persons or use special tools) during the moving. The tilt angle of the cabinet must not exceed 10° in any direction (front, rear, left, or right).
- When the slope angle is between 10° and 15°, take anti-tilt measures (for example, bind bands) in all directions (front, rear, left, and right) during the moving to stabilize the cabinet. The tilt angle of the cabinet must not exceed 10° in any direction (front, rear, left, or right).
- When the slope angle is greater than 15°, do not use manual forklifts or manual electric forklifts. You are advised to use electric forklifts or hoists. During hoisting, the cabinet shall be lifted in the original packaging. When an electric forklift is used for transport on slopes, the forklift must face uphill during ascent and descend slowly in reverse.

Working at Heights

- Any operations performed 2 m or higher above the ground must be supervised properly.
- Only trained and qualified personnel are allowed to work at heights.
- Do not work at heights when steel pipes are wet or other risky situations exist. After the preceding conditions no longer exist, the safety owner and relevant technical personnel need to check the involved equipment. Operators can begin working only after safety is confirmed.
- Set a restricted area and prominent signs for working at heights to warn away irrelevant personnel.
- Set guard rails and warning signs at the edges and openings of the area involving working at heights to prevent falls.
- Do not pile up scaffolding, scaffold planks, or other objects on the ground under the area involving working at heights. Do not allow people to stay or pass under the area involving working at heights.
- Carry operation machines and tools properly to prevent equipment damage or personal injury caused by falling objects.
- Personnel involving working at heights are not allowed to throw objects from the height to the ground, or vice versa. Objects shall be transported by slings, hanging baskets, aerial work platforms, or cranes.
- Do not perform operations on the upper and lower layers at the same time. If unavoidable, install a dedicated protective shelter between the upper and lower layers or take other protective measures. Do not pile up tools or materials on the upper layer.
- Dismantle the scaffolding from top down after finishing the job. Do not dismantle the upper and lower layers at the same time. When removing a part, ensure that other parts will not collapse.
- Ensure that personnel working at heights strictly comply with the safety regulations. The Company is not responsible for any accident caused by violation of the safety regulations on working at heights.
- Behave cautiously when working at heights. Do not rest at heights.

Using Ladders

- Use wooden or insulated ladders when you need to perform live-line working at heights.
- Platform ladders with protective rails are preferred. Single ladders are not recommended.
- Before using a ladder, check that it is intact and confirm its load bearing capacity. Do not overload it.
- Ensure that the ladder is securely positioned and held firm.

CZ00000107

- When climbing up the ladder, keep your body stable and your center of gravity between the side rails, and do not overreach to the sides.
- When a step ladder is used, ensure that the pull ropes are secured.
- If a single ladder is used, the recommended angle for the ladder against the floor is 75 degrees, as shown in the following figure. A square can be used to measure the angle.

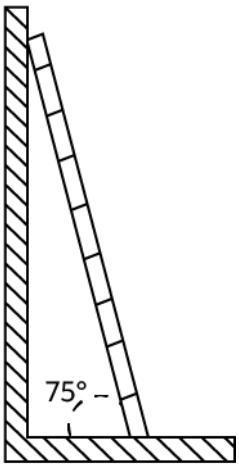

PI02SC0008

- If a single ladder is used, ensure that the wider end of the ladder is at the bottom, and take protective measures to prevent the ladder from sliding.
- If a single ladder is used, do not climb higher than the fourth rung of the ladder from the top.
- If you use a single ladder to climb up to a platform, ensure that the ladder is at least 1 m higher than the platform.

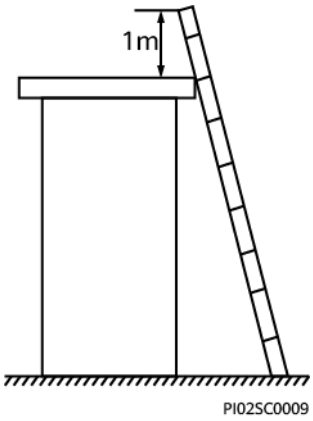

Hoisting

- Only trained and qualified personnel are allowed to perform hoisting operations.
- Install temporary warning signs or fences to isolate the hoisting area.
- Ensure that the foundation where hoisting is performed meets the load-bearing requirements.
- Before hoisting objects, ensure that hoisting tools are firmly secured onto a fixed object or wall that meets the load-bearing requirements.
- During hoisting, do not stand or walk under the crane or the hoisted objects.
- Do not drag steel ropes and hoisting tools or bump the hoisted objects against hard objects during hoisting.
- Ensure that the angle between two hoisting ropes is no more than 90 degrees, as shown in the following figure.

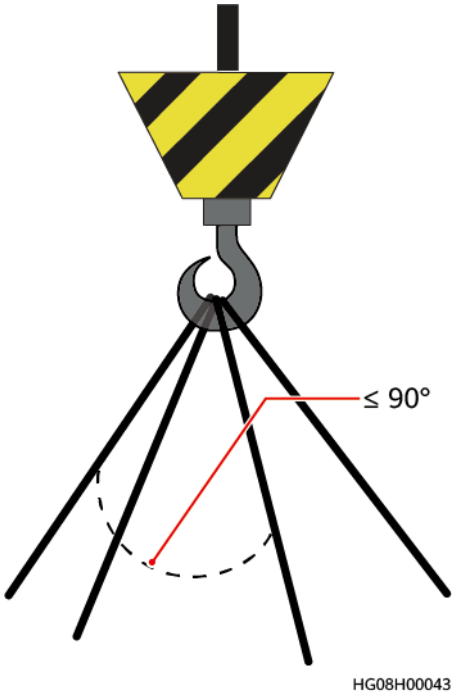

Drilling Holes

- Obtain consent from the customer and contractor before drilling holes.
- Wear protective equipment such as safety goggles and protective gloves when drilling holes.
- To avoid short circuits or other risks, do not drill holes into buried pipes or cables.
- When drilling holes, protect the equipment from shavings. After drilling, clean up any shavings.

 Copyright © Huawei Digital Power Technologies Co., Ltd.

2 Product Overview

2.1 Model Description

This document describes the following UPS models:

- UPS5000-E-400K-SM
- UPS5000-E-400K-FM
- UPS5000-E-500K-SM
- UPS5000-E-500K-FM
- UPS5000-E-600K-SM
- UPS5000-E-600K-FM
- UPS5000-E-800K-SM
- UPS5000-E-800K-FM

Figure 2-1 UPS model number

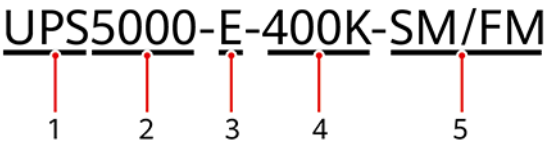

Table 2-1 Model number details

No.	Item	Description
1	Product category	UPS, short for uninterruptible power system
2	UPS family	5000
3	UPS subcategory	E series

No.	Item	Description
4	Output capacity	• 400K: The output capacity is 400 kVA. • 500K: The output capacity is 500 kVA. • 600K: The output capacity is 600 kVA. • 800K: The output capacity is 800 kVA.
5	Configuration type	• SM: standard configuration • FM: full configuration

NOTE

- The UPS5000-E-400K-SM/FM uses 50 kVA power modules. It can expand up to 400 kVA and is compatible downwards to 50 kVA. This document describes the 400 kVA UPS.
- The UPS5000-E-500K-SM/FM uses 50 kVA power modules. It can expand up to 500 kVA and is compatible downwards to 50 kVA. This document describes the 500 kVA UPS.
- The UPS5000-E-600K-SM/FM uses 50 kVA power modules. It can expand up to 600 kVA and is compatible downwards to 50 kVA. This document describes the 600 kVA UPS.
- The UPS5000-E-800K-SM/FM uses 50 kVA power modules. It can expand up to 800 kVA and is compatible downwards to 50 kVA. This document describes the 800 kVA UPS.

2.2 Working Principle

NOTE

- → indicates an input mode.
- ➡ indicates the direction of energy flow.

2.2.1 Conceptual Diagram

The UPS is an online product. It uses modular design, which facilitates maintenance and capacity expansion. The UPS5000 adopts intelligent control. Its power module consists of a rectifier, inverter, and DC/DC converter. The UPS5000 converts inputs into pure high-quality sine wave outputs by using the high-frequency switching technology.

Figure 2-2 Conceptual diagram (standard configuration)

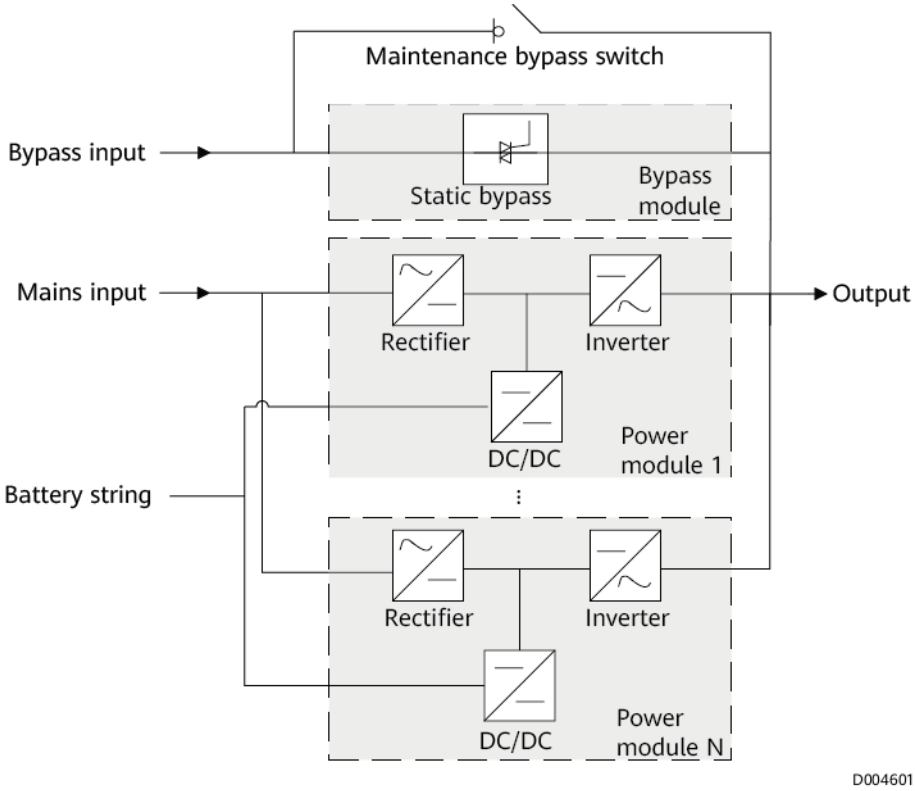

Figure 2-3 Conceptual diagram (full configuration)

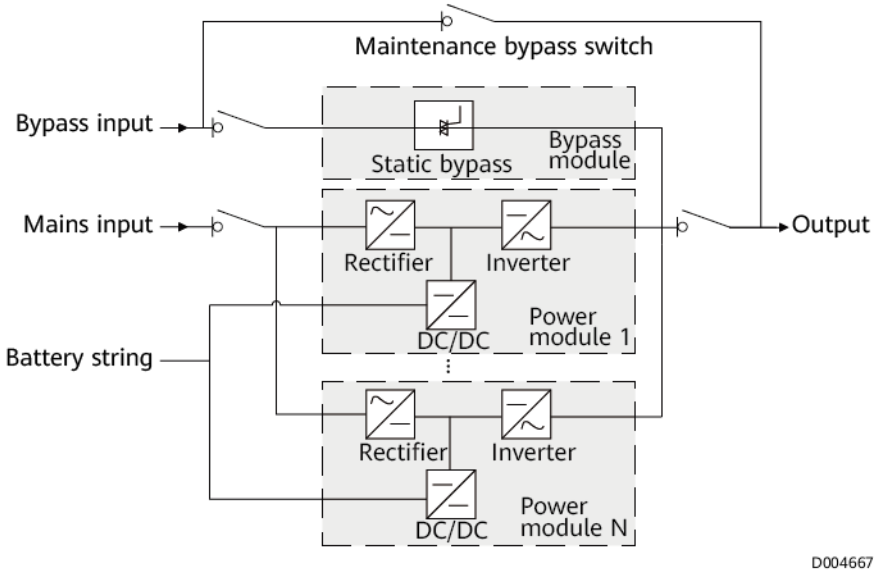

2.2.2 Working Modes

2.2.2.1 Normal Mode

In normal mode, the rectifier converts AC power into DC power, and then the inverter converts the DC power into high-precision AC outputs. The conversions

protect loads from interference such as input harmonics, glitches, and voltage transients.

Figure 2-4 Normal mode

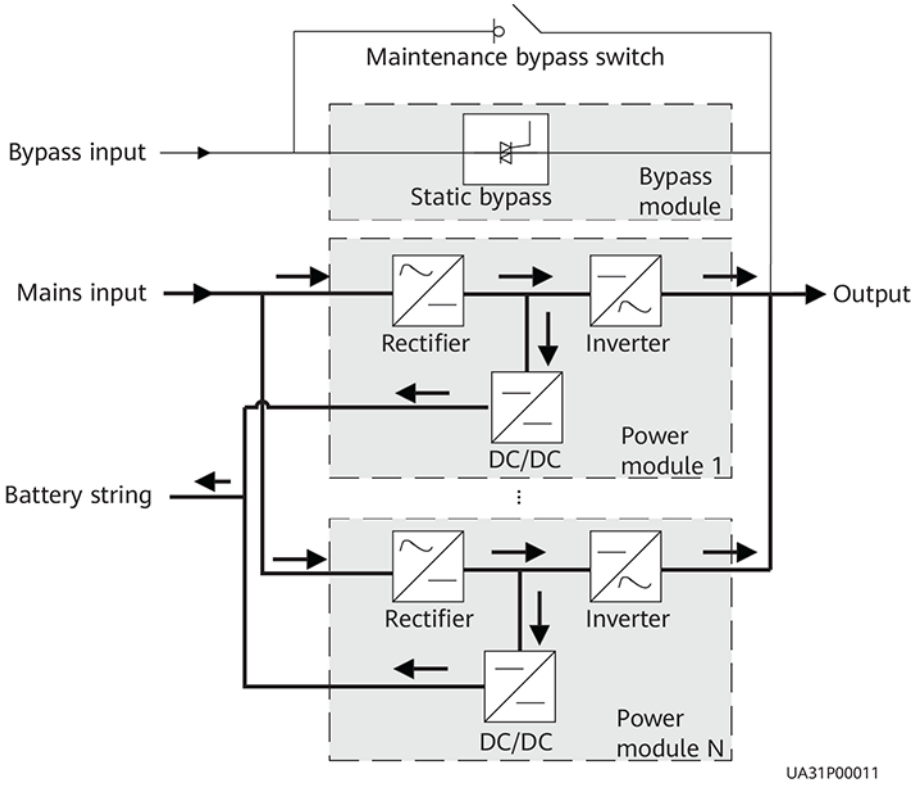

2.2.2.2 Bypass Mode

The UPS automatically transfers to bypass mode upon detecting power module overtemperature, overload, or other faults that may cause the inverter to shut down. In bypass mode, loads are powered by the bypass module. The bypass power supply is not protected by the UPS and therefore is prone to the mains outage, abnormal AC voltage waveform, or abnormal frequency.

Figure 2-5 Bypass mode

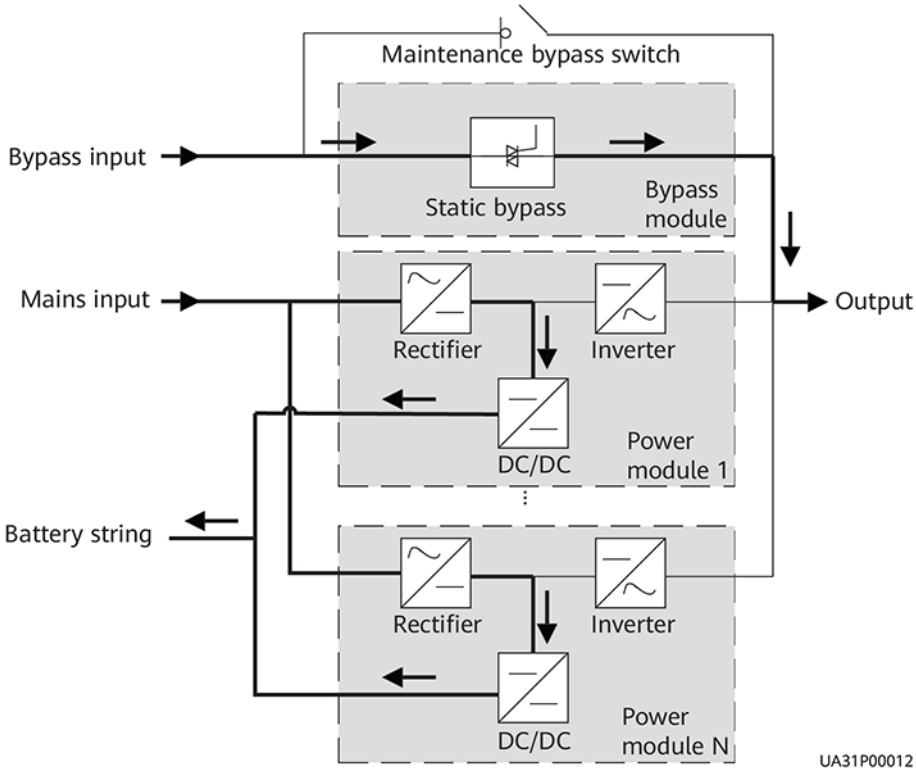

2.2.2.3 Battery Mode

If the utility power input is abnormal or the rectifier becomes abnormal, the UPS transfers to battery mode. The power module obtains DC power from batteries, and the power is converted into AC output by the inverter.

Figure 2-6 Battery mode

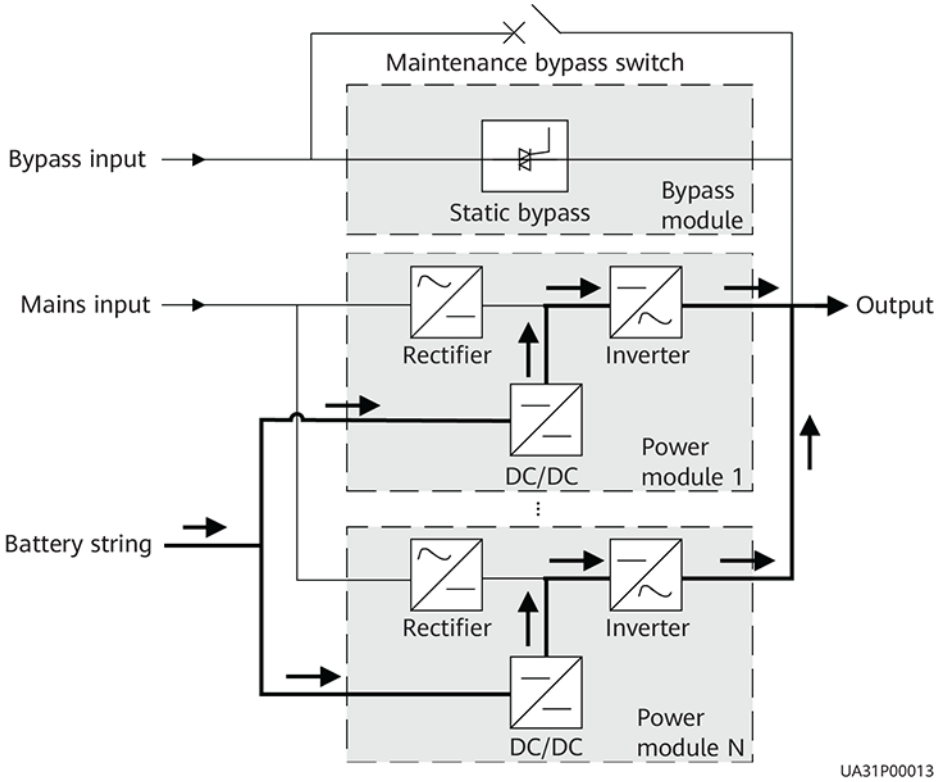

2.2.2.4 Maintenance Bypass Mode

When the UPS works in maintenance bypass mode, the current flows through the maintenance bypass instead of the power module. You can maintain the circuit inside the cabinet.

Figure 2-7 Maintenance bypass mode

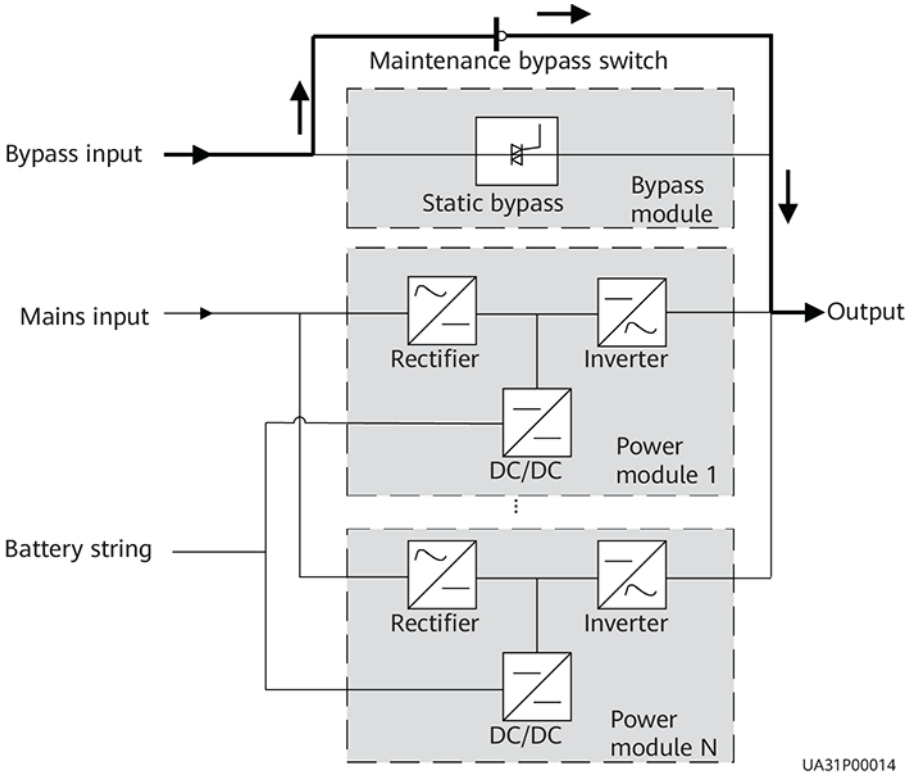

2.2.2.5 ECO Mode

The economic control operation (ECO) mode is an economical working mode, which can be configured on the LCD or web user interface (WebUI). In ECO mode, when the bypass input is within the ECO voltage and frequency ranges and other ECO power supply conditions are met, the UPS works in bypass mode and the inverter is in standby state. When the bypass source voltage is outside the ECO voltage range, the UPS transfers from bypass mode to inverter mode. In bypass mode or normal mode, the rectifier keeps working and charges batteries using a charger. The ECO mode delivers a high efficiency.

Figure 2-8 ECO mode

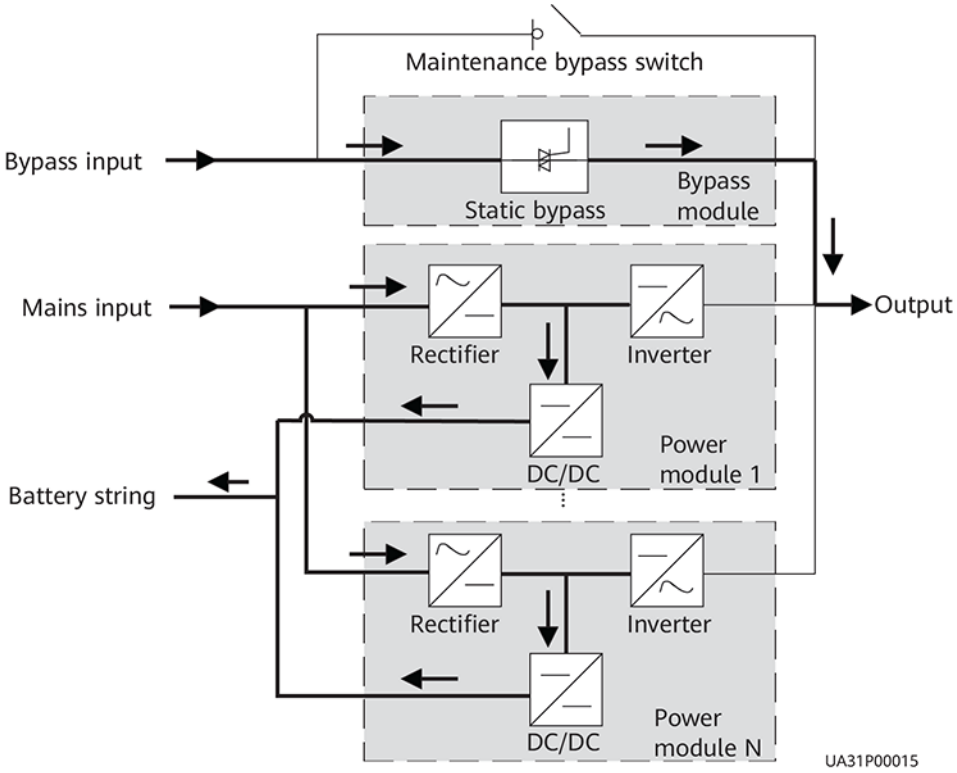

NOTE

Manual startup is required to ensure that the inverter is in standby state and the power flow has reached the inverter.

2.3 Product Introduction

2.3.1 Appearance

Figure 2-9 400 kVA/500 kVA UPS

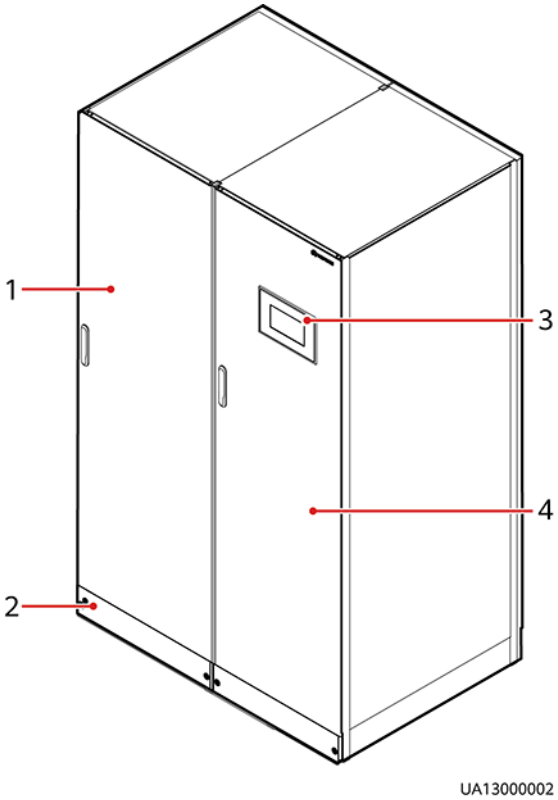

(1) Power cabinet	(2) Anchor baffle plates	(3) Monitor display unit (MDU)	(4) Bypass cabinet

Figure 2-10 600 kVA UPS

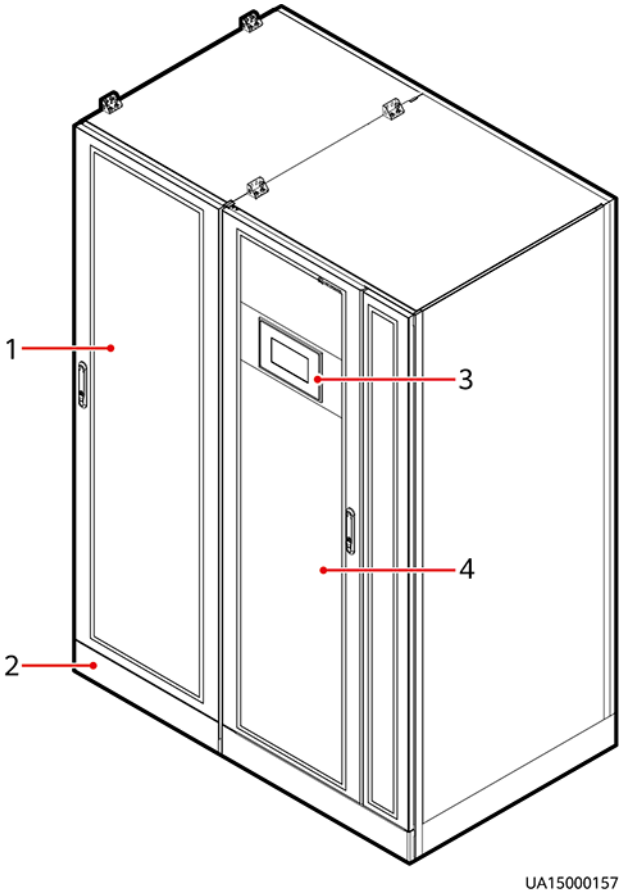

(1) Power cabinet (2) Anchor baffle plates (3) MDU (4) Bypass cabinet

Figure 2-11 800 kVA UPS

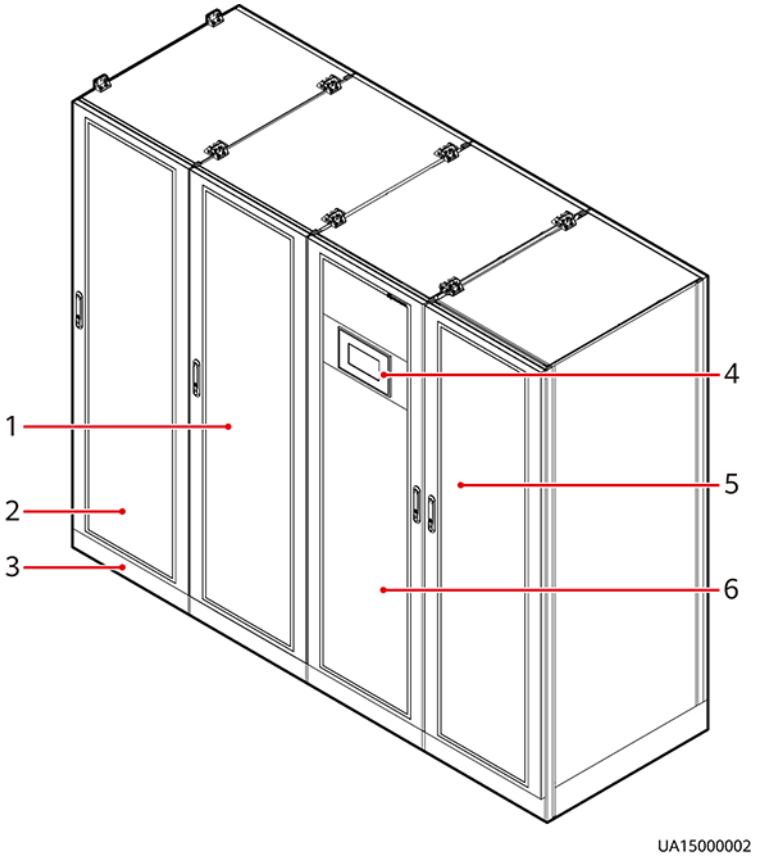

(1) Power cabinet 1 (2) Power cabinet 2 (3) Anchor baffle plates

(4) MDU (5) Bypass cabinet 2 (6) Bypass cabinet 1

2.3.2 Product Structure

Figure 2-12 Product structure (400 kVA in standard configuration)

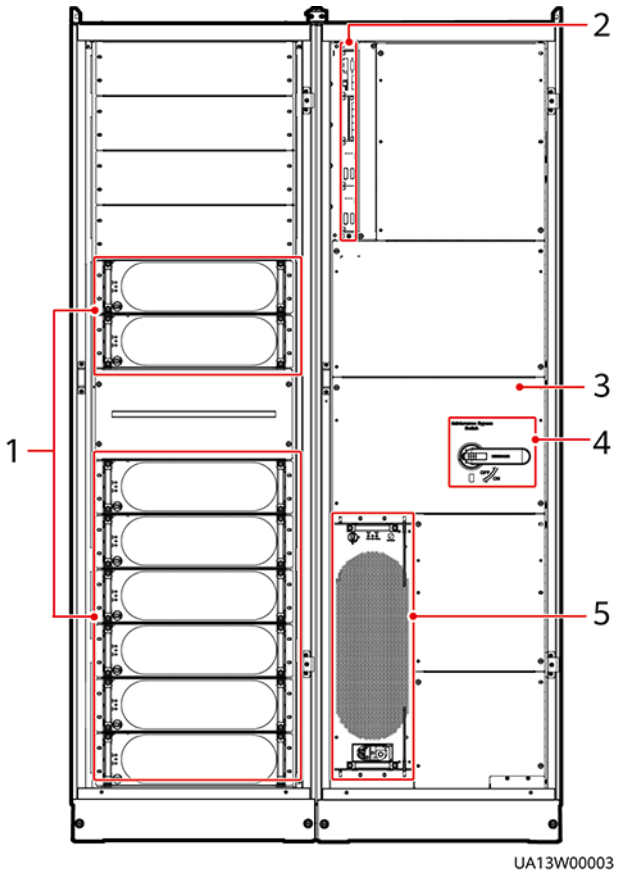

(1) Power modules (2) Control module (3) Power distribution module cover

(4) Maintenance bypass switch (5) Bypass module

Figure 2-13 Product structure (400 kVA in full configuration)

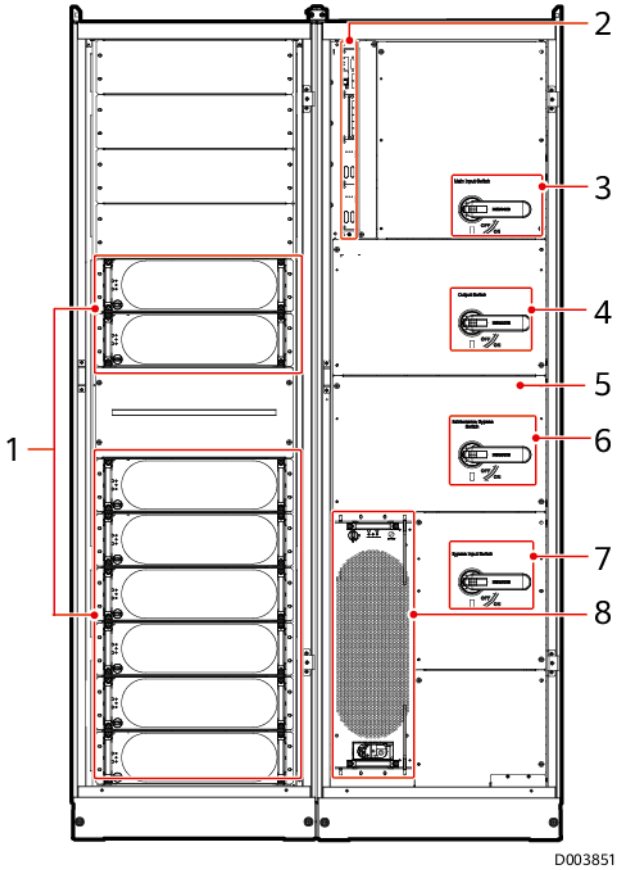

(1) Power modules	(2) Control module	(3) Mains input switch
(4) Output switch	(5) Power distribution module cover	(6) Maintenance bypass switch
(7) Bypass input switch	(8) Bypass module	

Figure 2-14 Product structure (500 kVA in standard configuration)

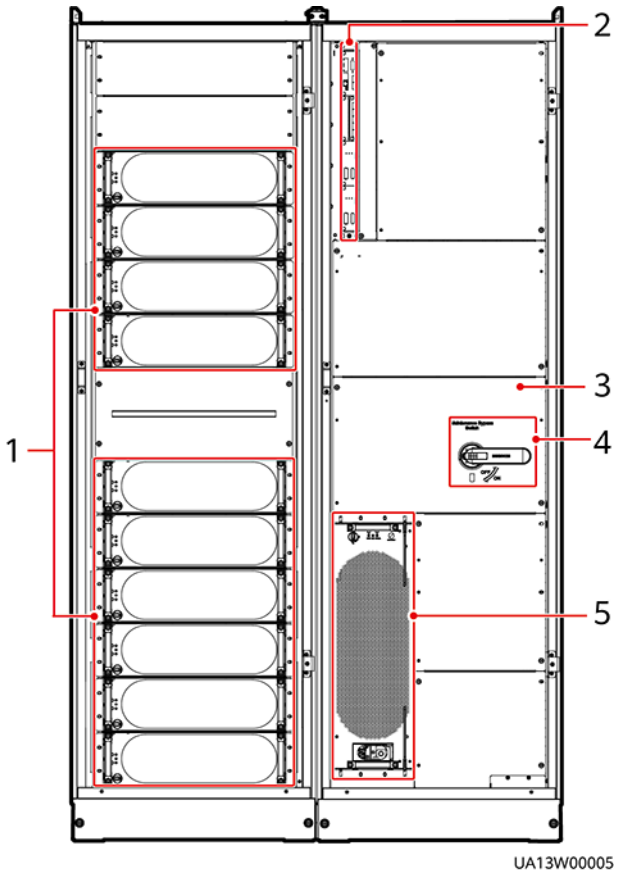

(1) Power modules (2) Control module (3) Power distribution module cover

(4) Maintenance bypass switch (5) Bypass module

Figure 2-15 Product structure (500 kVA in full configuration)

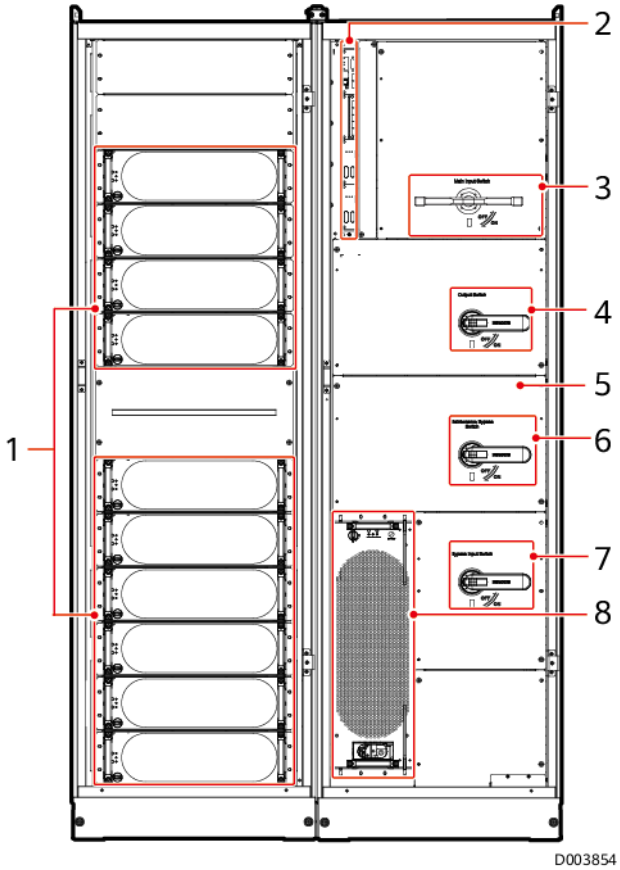

(1) Power modules	(2) Control module	(3) Mains input switch
(4) Output switch	(5) Power distribution module cover	(6) Maintenance bypass switch
(7) Bypass input switch	(8) Bypass module	

Figure 2-16 Product structure (600 kVA in standard configuration)

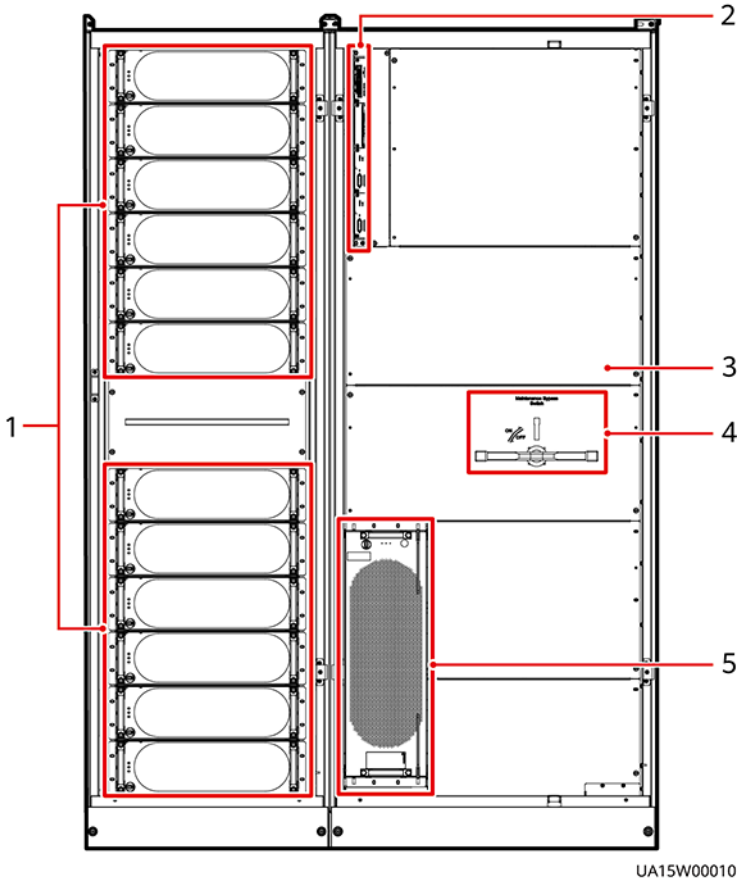

(1) Power modules (2) Control module (3) Power distribution module cover

(4) Maintenance bypass switch (5) Bypass module

Figure 2-17 Product structure (600 kVA in full configuration)

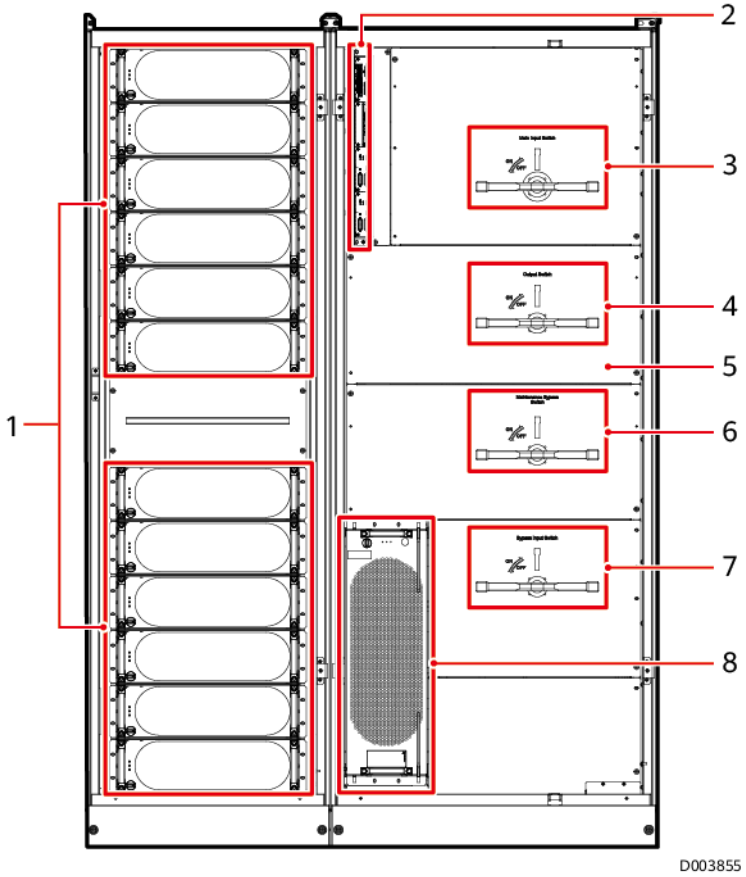

(1) Power modules	(2) Control module	(3) Mains input switch
(4) Output switch	(5) Power distribution module cover	(6) Maintenance bypass switch
(7) Bypass input switch	(8) Bypass module	

Figure 2-18 Product structure (800 kVA in standard configuration)

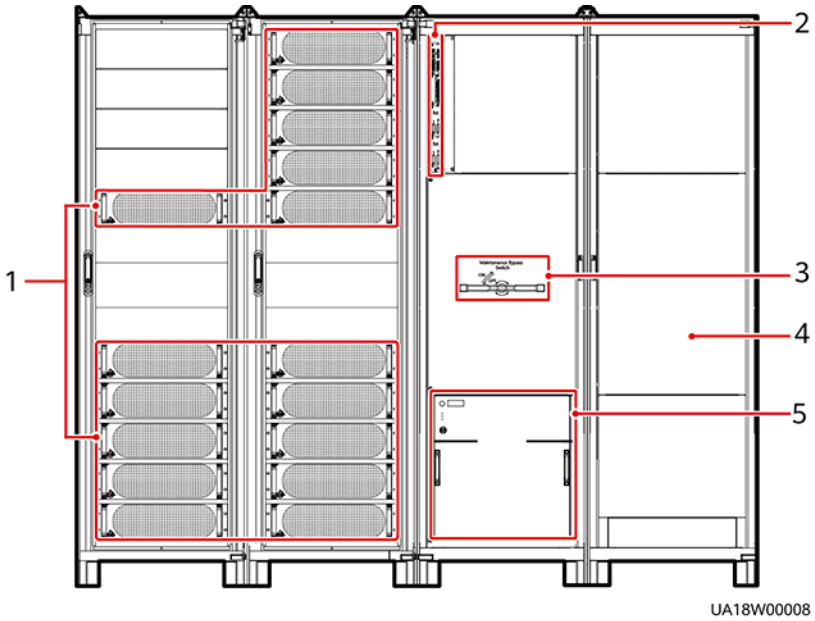

(1) Power modules (2) Control module (3) Maintenance bypass switch

(4) Power distribution module cover (5) Bypass module

Figure 2-19 Product structure (800 kVA in full configuration)

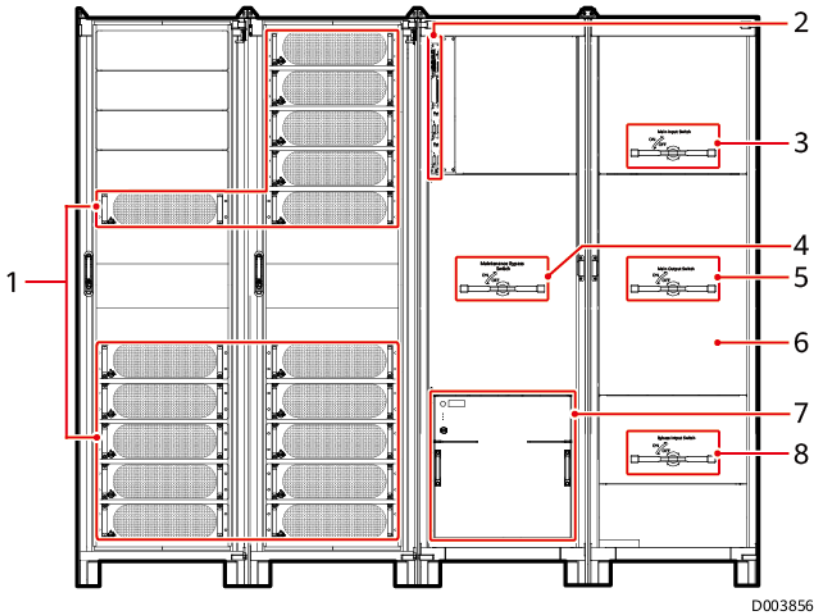

(1) Power modules (2) Control module (3) Mains input switch

(4) Maintenance bypass switch (5) Output switch (6) Power distribution module cover

(7) Bypass module (8) Bypass input switch

2.3.3 Power Module

Appearance

Figure 2-20 Power module

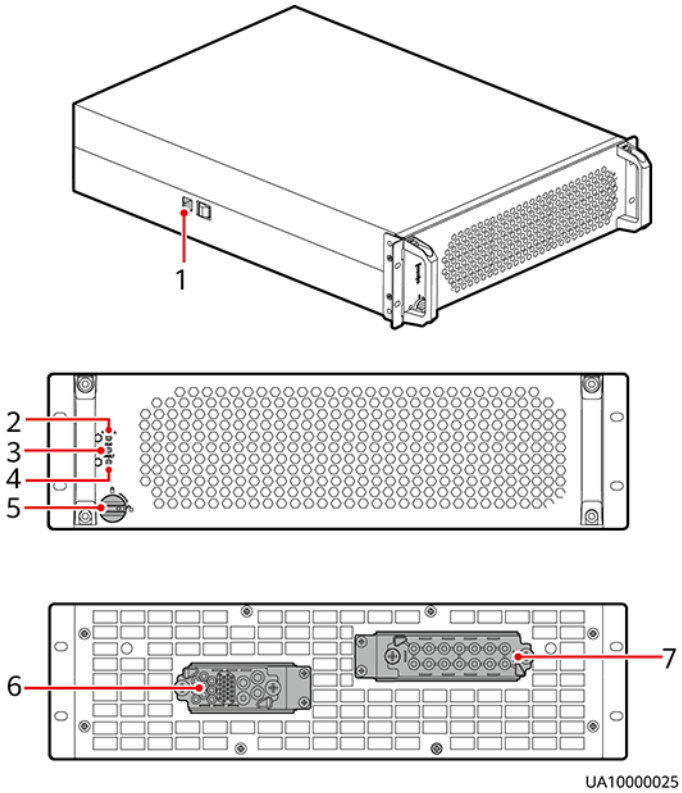

(1) Positioning lock (2) Run indicator (3) Alarm indicator (4) Fault indicator

(5) Ready switch (6) Output port (7) Input port

Table 2-2 Indicator description

Indicator	Color	Status	Description
Run indicator	Green	Steady on	The system is working in inverter mode.
		Blinking slowly	• The inverter is ready and in standby state (blinking at 0.5 Hz, on for 1s and off for 1s). • The inverter is not started (blinking at 0.2 Hz, on for 2.5s and off for 2.5s).
		Blinking fast	The module is not configured, the inverter software and rectifier software are being upgraded, or the inverter software is being upgraded (blinking at 4 Hz, on for 0.125s and off for 0.125s).

Indicator	Color	Status	Description
		Off	The rectifier software is being upgraded.
Alarm indicator	Yellow	Steady on	A minor alarm is generated for the inverter or rectifier.
		Off	There is no minor alarm for the inverter or rectifier, or the rectifier software is being upgraded.
Fault indicator	Red	Steady on	A critical alarm is generated for the inverter or rectifier.
		Off	There is no critical alarm for the inverter or rectifier, or the rectifier software is being upgraded.

Functions

The power module consists of a power factor correction (PFC) rectifier and inverter. It performs AC/DC or DC/DC conversion on the mains and battery inputs, and stabilizes the bus voltage. The inverter (DC/AC) converts the inputs into sine wave outputs.

Specifications

- Dimensions (H x W x D): 130 mm x 442 mm x 620 mm
- Weight: ≤ 35 kg
- Rated output capacity: 50 kVA/50 kW
- Power density: 50 kVA/3 U
- Do not stack power modules without packaging materials. Stack power modules with packaging materials in no more than 5 layers.

 Copyright © Huawei Digital Power Technologies Co., Ltd.

2.3.4 Bypass Module

Appearance

Figure 2-21 400 kVA/500 kVA/600 kVA bypass module

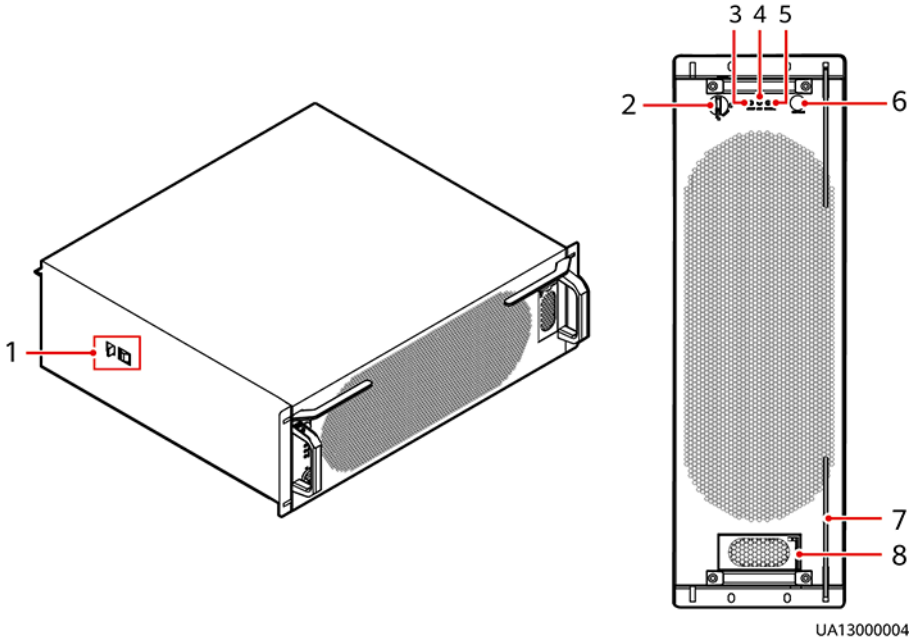

(1) Positioning lock	(2) Ready switch	(3) Fault indicator	(4) Alarm indicator
(5) Running indicator	(6) Cold start button	(7) Crowbar	(8) Auxiliary power supply

Figure 2-22 800 kVA bypass module

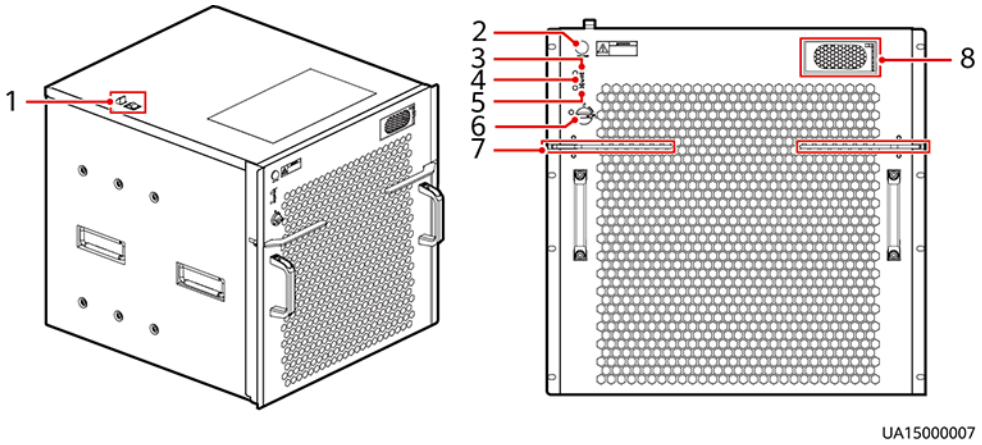

(1) Positioning lock	(2) Cold start button	(3) Running indicator	(4) Alarm indicator
(5) Fault indicator	(6) Ready switch	(7) Crowbar	(8) Auxiliary power supply

Table 2-3 Indicator description

Indicator	Color	Status	Description
Running indicator	Green	Steady on	The system is working in bypass mode.
		Blinking at long intervals	The bypass has no output (blinking at 0.2 Hz, on for 2.5s and off for 2.5s).
		Blinking at short intervals	The bypass is not configured or the software is being upgraded (blinking at 4 Hz, on for 0.125s and off for 0.125s).
		Off	The bypass software is being upgraded.
Alarm indicator	Yellow	Steady on	A minor alarm is generated for the bypass.
		Off	There is no minor alarm for the bypass, or the software is being upgraded.
Fault indicator	Red	Steady on	A critical alarm is generated for the bypass.
		Off	There is no critical alarm for the bypass, or the software is being upgraded.

Functions

The bypass module supplies power in the following cases:

If the UPS is set to ECO mode and the bypass voltage is within the specified range, the UPS works in bypass mode.

If the power module overload times out, the UPS transfers to bypass mode.

Both the active and standby ECMs are abnormal.

The system fails to run properly and transfers to bypass mode.

A manual operation is performed to transfer to bypass mode.

Specifications

- Dimensions (H x W x D)
  - 400 kVA/500 kVA/600 kVA: 200 mm x 600 mm x 600 mm
  - 800 kVA: 500 mm x 480 mm x 550 mm
- Weight

- 400 kVA/500 kVA/600 kVA: 50 kg
- 800 kVA: 83 kg

2.3.5 Control Module

2.3.5.1 Overview

In a standard configuration, the control module consists of two ECMs, one dry contact card, and one monitoring interface card (from left to right). The four cards are hot swappable. One subrack is reserved above the dry contact card. A backfeed protection card or dry contact extended card can be inserted into this subrack.

Figure 2-23 Signal panel on the control module

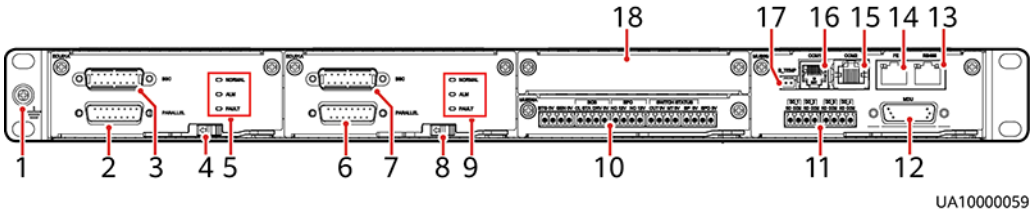

(1) Ground terminal	(2) Parallel port 1	(3) BSC port 1	(4) Ready switch on ECM 1
(5) Indicators for ECM 1	(6) Parallel port 2	(7) BSC port 2	(8) Ready switch on ECM 2
(9) Indicators for ECM 2	(10) Dry contact card	(11) Dry contacts	(12) MDU port
(13) RS485 port	(14) Fast Ethernet (FE) port	(15) COM2 port	(16) COM1 port
(17) Battery temperature sensor port	(18) Optional card subrack cover		

NOTE

Ports are protected by a security mechanism.

2.3.5.2 ECM

Appearance

The control module consists of two energy control modules (ECMs) in active/standby mode.

Figure 2-24 ECM

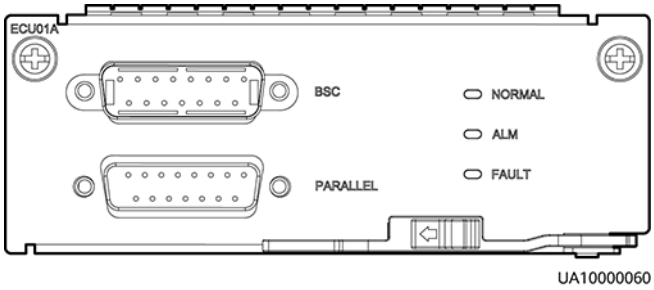

Table 2-4 Ports on the ECM

Silk Screen	Description
PARALLEL	The PARALLEL port transmits parallel signals between racks.
BSC	The BSC port is used in a dual-bus system to synchronize output frequencies and phases between UPS systems, ensuring that two buses can switch with each other. BSC cables are hot-swappable.

NOTE

For a single UPS, the parallel cable is not needed.

Table 2-5 Indicator description

Indicator	Color	Status	Description
NORMAL	Green	Steady on	This ECM is the active ECM.
		Blinking at 0.5 Hz	This ECM is the standby ECM and it is ready.
		Off	This ECM is not ready or the software of this ECM is being upgraded.
		Blinking at 4 Hz	The software of the ECM is being upgraded or not configured.
ALM	Yellow	Steady on	The ECM has a minor alarm, but it does not need to be replaced.
		Off	The ECM has no minor alarm or the software of the ECM is being upgraded.
FAULT	Red	Steady on	The ECM has a critical alarm.

Indicator	Color	Status	Description
		Off	The ECM has no critical alarm or the software of the ECM is being upgraded.

Functions

- As a control interface for the entire system, the ECM communicates with each module and provides a bus for communication between the dry contact card and the system control card. The ECM ensures equalized output currents between modules so that load power is equally shared.
- Provides module running information for the MDU.
- Controls the running of a single UPS5000 and a parallel system, and reports the UPS5000 status information to other monitoring modules.
- The system provides three types of CAN communication: monitoring CAN communication, intra-rack parallel CAN communication, and inter-rack parallel CAN communication.

Figure 2-25 Logical connections for CAN communication

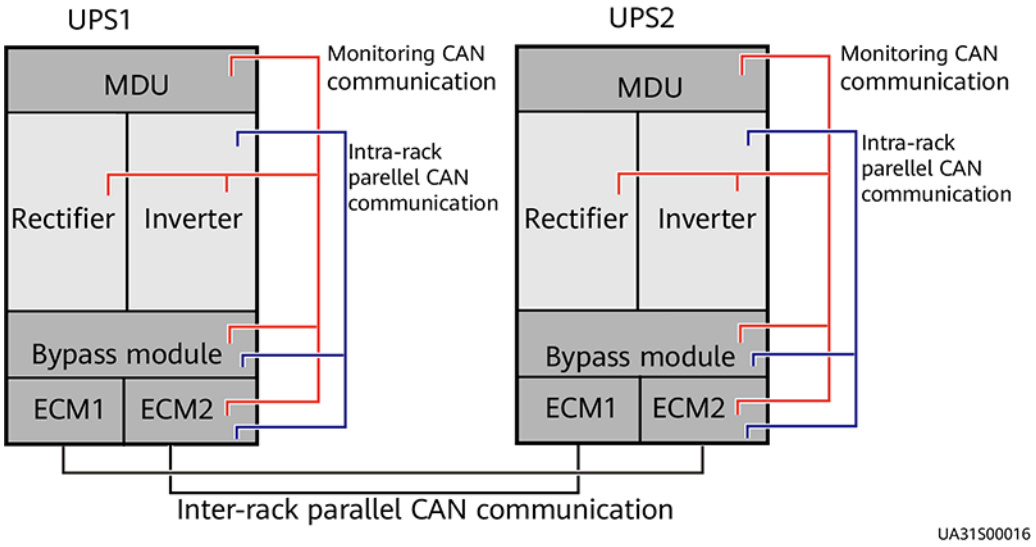

Specifications

- Hot-swappable
- 1 U high

2.3.5.3 Dry Contact Card

- The dry contact card allows the UPS to detect and manage the switch status of the battery system (including the external battery switch) and implement remote emergency power off (EPO).
- Hot-swappable, 0.5 U high.

NOTICE

- A dry contact card port takes effect only after you set it in the software. You need to disable unused dry contact signals.
- Set the EPO port to normally open (NO) or normally closed (NC) as required.
- If multiple UPSs are connected in parallel, connect all used dry contact signals to each UPS.
- Set remote EPO for the UPS separately. The UPS cannot share switch contacts with other devices.
- DI ports have built-in power supplies with a maximum voltage and current of 12 V DC/16 mA. Connect cables to passive switch contacts.
- Signal cables must be double-insulated twisted cables. If the cable length is within 25–50 m, the cross-sectional area must be 0.5–1.5 mm^2.

Figure 2-26 Appearance

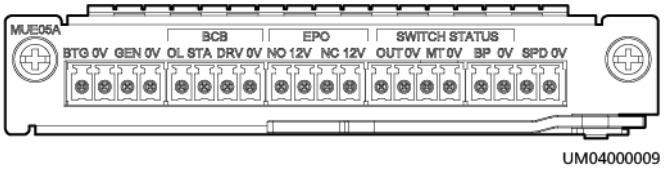

Table 2-6 Dry contact card port definitions

Silk Screen	Type	Working Principle	Signal Description	Status Description	System Action
BTG	DI	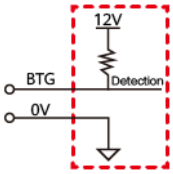	Port for detecting battery grounding faults	The DI signal is NO (open) by default. • BTG port closed: battery grounding fault • BTG port open: no battery grounding fault	After the setting takes effect, the system will generate a battery grounding fault alarm.
0V			Port for signal ground		
GEN	DI	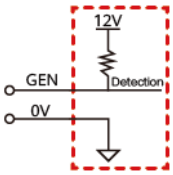	Port for detecting genset connection	The DI signal is NO (open) by default. • GEN port closed: genset connected • GEN port open: genset not connected	The port is used together with the generator power limiting function. After the setting takes effect, the system will limit the PFC power based on the preset generator power limit.
0V			Port for signal ground		

Silk Screen	Type	Working Principle	Signal Description	Status Description	System Action
BCB_OL	DI	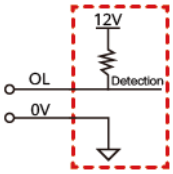	Port for detecting the BCB box	• Grounded: BCB box connected • Disconnected: BCB box not connected	After the setting takes effect, the system will detect whether the BCB is online.
BCB_STA	DI	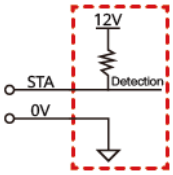	Port for monitoring the BCB	• Closed: BCB On • Open: BCB Off	
BCB_DRV	DO	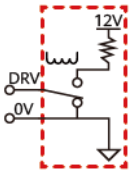	Drives BCB tripping. When the voltage is +12 V, the circuit breaker trips.	• 0 V: not drive BCB tripping • 12 V: drive BCB tripping	Used to send a BCB tripping drive signal.
BCB_0V			Port for signal ground		
EPO_NO	DI	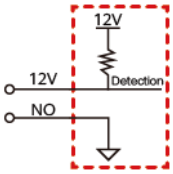	Emergency power-off (EPO) port	If the normally open (NO) signal port is connected to the EPO_12V port, EPO is triggered.	After the setting takes effect, the system will generate an EPO alarm and stop supplying power.
EPO_12V			+12 V		
EPO_NC	DI	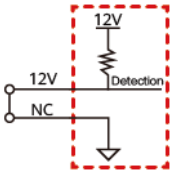	EPO port	If the normally closed (NC) port is disconnected from the EPO_12V port, EPO is triggered. Before delivery, a short-circuit cable has been installed on the NC and 12V ports.	After the setting takes effect, the system will generate an EPO alarm and stop supplying power.
EPO_12V			+12 V		

Silk Screen	Type	Working Principle	Signal Description	Status Description	System Action
SWITCH STATUS_OUT	DI	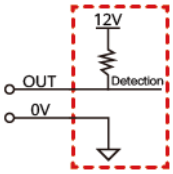	Port for monitoring the output switch on the power distribution frame (PDF)	The DI signal is NC (closed) by default. • OUT port closed: The PDF output switch is ON. • OUT port open: The PDF output switch is OFF.	After the setting takes effect, the system will generate a PDF output circuit breaker open alarm and will also shut down the inverter on the rack in the parallel connection scenario.
SWITCH STATUS_0V			Port for signal ground		
SWITCH STATUS_MT	DI	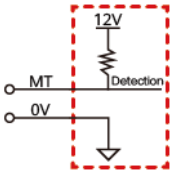	Port for monitoring the maintenance switch on the PDF	The DI signal is NO (open) by default. • MT port open: The PDF maintenance switch is ON. • MT port closed: The PDF maintenance switch is OFF.	After the setting takes effect, the system will generate a PDF maintenance bypass closed alarm and transfer to static bypass mode.
SWITCH STATUS_0V			Port for signal ground		
SWITCH STATUS_BP	DI	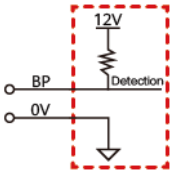	Port for monitoring the PDF bypass input switch status (This port can also be defined as the port for monitoring the system maintenance switch status on the UI.)	The DI signal is NC (closed) by default. • BP port closed: The bypass input switch or system maintenance switch is ON. • BP port open: The bypass input switch or system maintenance switch is OFF.	PDF bypass input switch: After the setting takes effect, the system will generate a PDF bypass input open alarm. System maintenance switch: After the setting takes effect, the system will generate a system maintenance bypass circuit breaker closed alarm and transfer to static bypass mode.
SWITCH STATUS_0V			Port for signal ground		

Silk Screen	Type	Working Principle	Signal Description	Status Description	System Action
SPD	DI	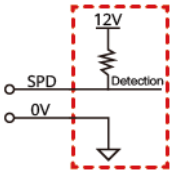	Port for monitoring the PDF input AC SPD status (This port can also be defined as the port for monitoring the system output switch status on the UI.)	The DI signal is NC (closed) by default. • SPD port closed: The PDF input AC SPD is normal or the system output switch is ON. • SPD port open: The PDF input AC SPD has failed or the system output switch is OFF.	PDF input AC SPD: After the setting takes effect, the system generates an input SPD alarm. System output switch: After the setting takes effect, the system will generate a system output circuit breaker open alarm and will also shut down the inverter on the rack in the parallel connection scenario.
0V			Port for signal ground		

Figure 2-27 Connecting cables to the DI external switch

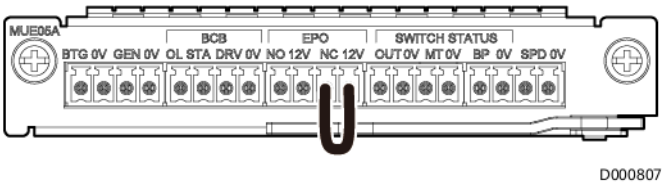

Figure 2-28 Working principle of connecting cables to the DI external switch

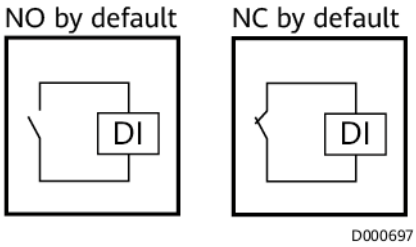

2.3.5.4 Monitoring Interface Card

- The monitoring interface card provides external ports as well as monitoring and control functions for the monitoring display unit (MDU).

- The monitoring interface card provides the ambient temperature and humidity (T/H) sensor port, FE port, battery temperature monitoring port, and network management port.

NOTICE

- The FE port resembles the RS485 port. Therefore, follow the silk screens when you connect communications cables. If you mistake the RS485 port as the FE port during cable connection, the WebUI communication fails. If you mistake the FE port as the RS485 port during cable connection, the RS485 communication fails.
- Dry contact signals take effect only after proper settings. Disable unused dry contact signals on the monitoring system.
- In a parallel system, ensure that used dry contacts properly connect to each UPS.
- Signal cables must be double-insulated twisted cables. If the cable length is 25–50 m, the cross-sectional area must be 0.5–1.5 mm^2.
- RS485 cables and FE cables must be shielded cables.
- The RS485 bus of each device is equipped with an independent 120-ohm termination resistor. You are advised not to connect RS485 communications cables to multiple devices in parallel.

Figure 2-29 Appearance (the COM1 port is an 8-pin RJ45 port)

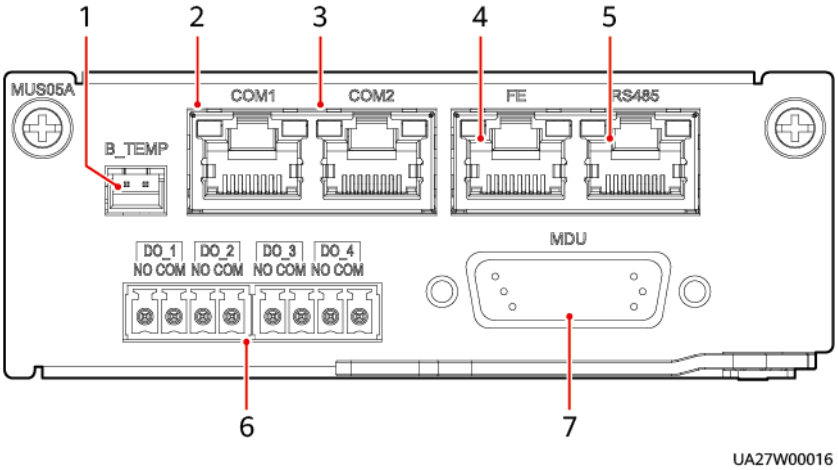

Figure 2-30 Appearance (the COM1 port is a 6-pin RJ11 port)

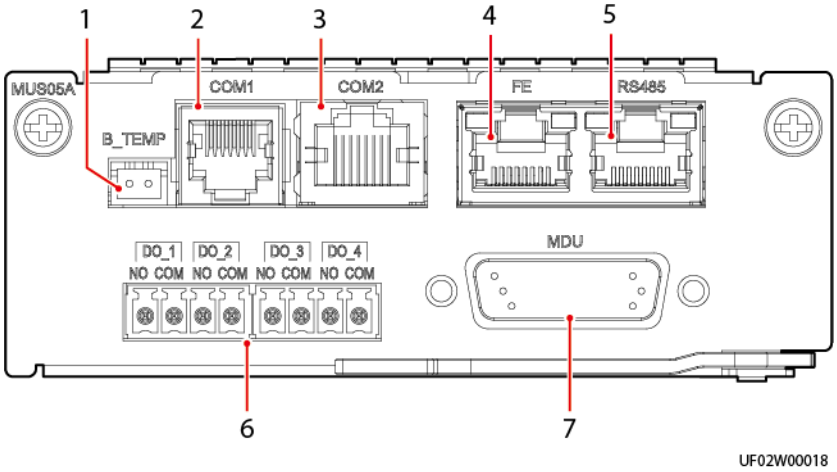

NOTE

The maximum voltage and current of ports DO_1 to DO_4 are 30 V DC, 1 A or 60 V DC, 0.5 A respectively.

No.	Silk Screen	Name	Description
1	B_TEMP	Battery temperature sensor port	Connects to an indoor battery temperature sensor.
2	COM1	Southbound communications port 1	• Supported protocol: Modbus-RTU • Connects to an ambient temperature and humidity (T/H) sensor over two wires.
3	COM2	Southbound communications port 2	• Supported protocol: Modbus-RTU • Connects to a southbound device.
4	FE	Network port	• Supported protocols: Versions earlier than UPS5000 V500R022C10: Modbus-TCP, HTTPS, and SNMP. UPS5000 V500R022C10 and later versions: Modbus-TCP, HTTPS, BIN, and SNMP. • Connects to the network port on a PC. • Network port for connecting to the web service and for SNMP networking
5	RS485	Northbound communications port	• Supported protocol: Modbus-RTU • Connects to a northbound network management device or third-party network management device over two wires.

No.	Silk Screen		Name	Description
6	DO_1	NO	Dry contact port 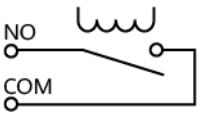	• DO_1, DO_2, DO_3, and DO_4 indicate alarm output. • Dry contact signals take effect after you set them. Disable unused dry contact signals on the monitoring system. • After the defined dry contact signals take effect, the system will be able to generate corresponding alarms. • In a parallel system, ensure that used dry contacts properly connect to each UPS. • Configure power segment settings based on backup time.
		COM		
	DO_2	NO		
		COM		
	DO_3	NO		
		COM		
	DO_4	NO		
		COM		
7	MDU		MDU port	Connects to the MUS05A (DB26) port on the MDU for power supply and communication.

Table 2-7 Pin definitions for the COM1 port

Appearance	Pin	COM1 Port
RJ45 (8-pin) 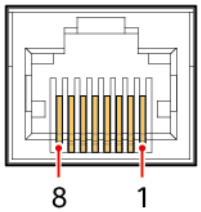	1	RS485_R+
	2	RS485_R–
	3	12V_PORT
	4	RS485_T+
	5	RS485_T–
	6	-
	7	-
	8	GND
RJ11 (6-pin) 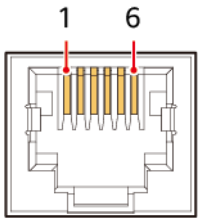	1	GND
	2	-
	3	RS485_R–
	4	RS485_R+
	5	-
	6	12V_PORT

Table 2-8 Pin definitions for the COM2, FE, and RS485 ports

Appearance	Pin	COM2 Port	FE Port	RS485 Port	Remarks
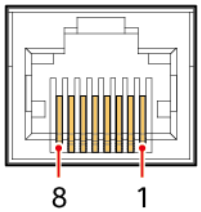	1	RS485_R+	RJ_TX+	RS485_T+	If cables need to be prepared for the COM2 and RS485 ports onsite, use any of the following methods: ● Connect pin 1 and pin 2. Pin 1 connects to RS485+ and pin 2 connects to RS485–. ● Connect pin 4 and pin 5. Pin 4 connects to RS485+ and pin 5 connects to RS485–. ● Connect pins 1, 2, 4, and 5. Twist cables to pin 1 and pin 4 into one cable and then connect it to RS485+. Twist cables to pin 2 and pin 5 into one and then connect it to RS485–.
	2	RS485_R–	RJ_TX–	RS485_T–	
	3	-	RJ_RX+	-	
	4	RS485_T+	-	RS485_R+	
	5	RS485_T–	-	RS485_R–	
	6	GND	RJ_RX-	GND	
	7	CAN_H	-	-	
	8	CAN_L	-	-	

NOTE

If cables are prepared onsite, use any of the following methods:

- Connect pin 1 and pin 2. Pin 1 connects to RS485+ and pin 2 connects to RS485–.
- Connect pin 4 and pin 5. Pin 4 connects to RS485+ and pin 5 connects to RS485–.
- Connect pins 1, 2, 4, and 5. Twist cables to pin 1 and pin 4 into one cable and then connect it to RS485+. Twist cables to pin 2 and pin 5 into one and then connect it to RS485–.

Figure 2-31 DO port wiring methods

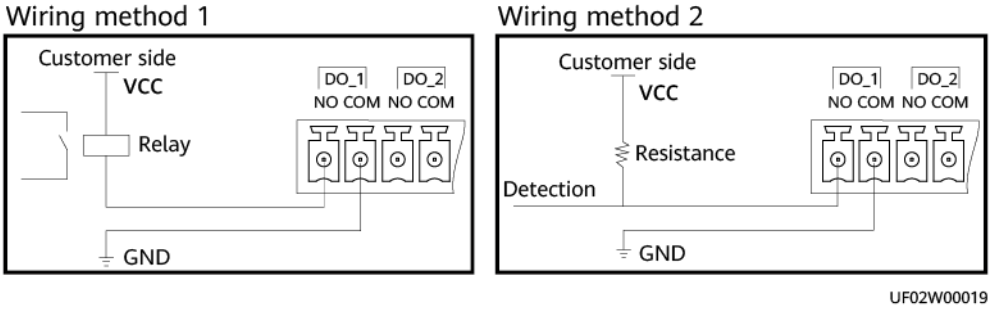

2.3.6 MDU

NOTE

The MDU is an LCD touchscreen and is delivered in two specifications: flat LCD and indented LCD.

Appearance

Figure 2-32 MDU (flat LCD)

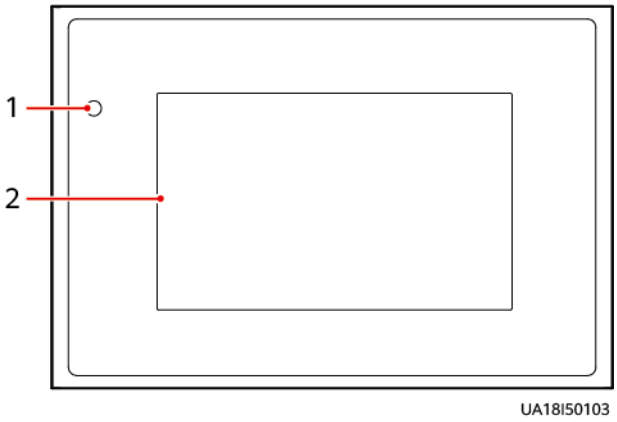

Figure 2-33 Old MDU (indented LCD)

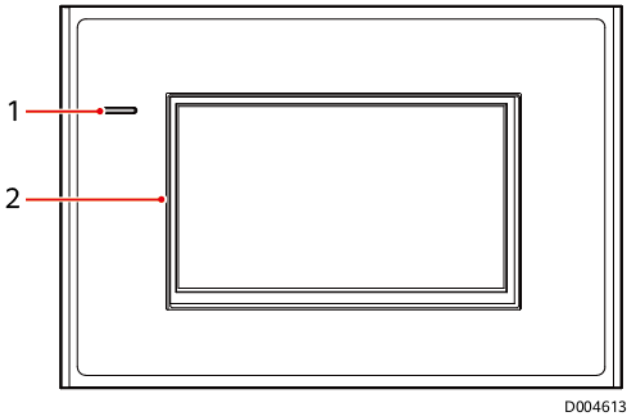

(1) Status indicator (2) LCD touchscreen

Table 2-9 Indicator status

Status	Color	Meaning
On	Red	A critical alarm has been generated, and the buzzer sounds continuously.
	Yellow	A minor alarm has been generated, and the buzzer buzzes at 2 Hz.
	Green	The UPS is running properly or a warning has been generated.

Status	Color	Meaning
Off	-	The MDU is powered off.

NOTE

The indicator on the MDU panel is yellow when the bypass supplies power in non-ECO mode.

Figure 2-34 MDU ports

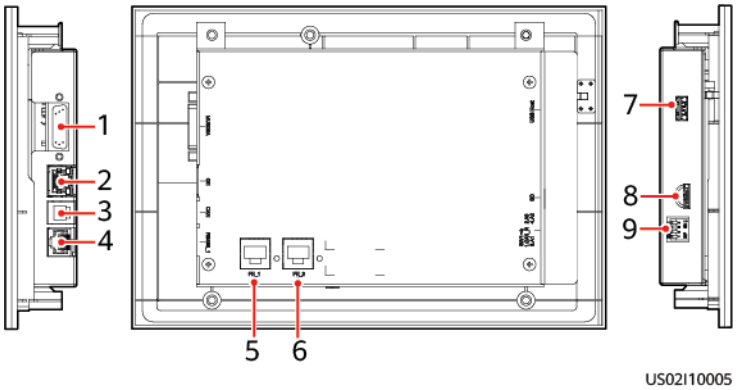

Table 2-10 MDU port description

No.	Port Name	Description
1	MUS05A (DB26)	Connects to the MDU and monitoring interface card **NOTICE** Do not remove or insert the cable at the MUS05A port with power on. When replacing the MDU, remove the cables between the MDU and the UPS, and then remove or insert cables at the ports of the MDU.
2	GE	Network port
3	CAN	Reserved
4	RS485_1	Reserved
5	FE_1	Reserved
6	FE_2	Reserved
7	USB Host	Insert the USB flash drive, import and export the configuration file, export run logs, and upgrade software. **NOTE** The USB port is protected by a security mechanism. Users can export and import data and upgrade software only after being authenticated.
8	SD	Reserved

No.	Port Name	Description
9	DIP switch	Implements specific functions by using the DIP switch and specific buttons; controls the CAN communication build-out resistor in a parallel system

Figure 2-35 Ports on the old MDU

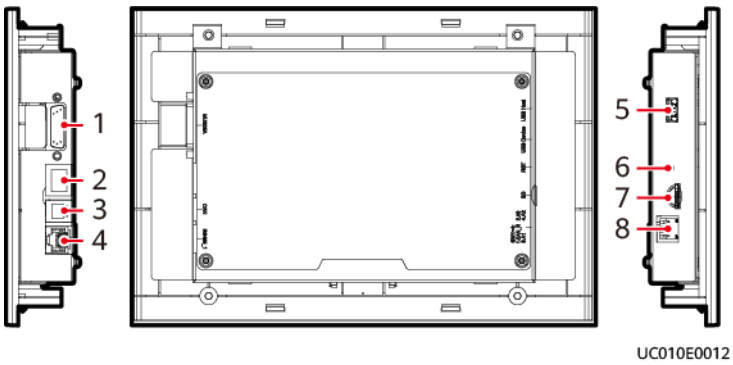

Table 2-11 Port description for the old MDU

No.	Port Name	Description
1	MUS05A (DB26)	Connects to the MDU and monitoring interface card **NOTICE** Do not remove or insert the cable at the MUS05A port with power on. When replacing the MDU, remove the cables between the MDU and the UPS, and then remove or insert cables at the ports of the MDU.
2	FE	Network port
3	CAN	Reserved
4	RS485_1	Reserved
5	USB Host	Insert the USB flash drive, import and export the configuration file, export run logs, and upgrade software. **NOTE** The USB port is protected by a security mechanism. Users can export and import data and upgrade software only after being authenticated.
6	RST	Restart switch for the MDU
7	SD	Reserved
8	DIP switch	Implements specific functions by using the DIP switch and specific buttons; controls the CAN communication resistor in a parallel system.

Functions

The MDU allows you to control UPS operations, view the running status and alarms, and set parameters.

Specifications

Dimensions (H x W x D): 180.4 mm x 265.4 mm x 40 mm

2.4 Typical Configurations

Table 2-12 Typical UPS configurations

Configuration	Application Scenario
Single UPS	Supplies power to common loads.
Parallel system	Supplies power to important loads in small- and medium-sized data centers. It features high availability and strong transient overload capability.
Dual-bus system	The dual-bus system is suitable for scenarios where high availability requirements are posed for power supply. The dual-bus system supplies power to important loads in large- and medium-sized equipment rooms and data centers. In addition to common parallel system advantages, the dual-bus system also provides outstanding availability and eliminates bottleneck failures. However, configuration of the dual-bus system is complex.

NOTE

- A 1+1 parallel system is a typical configuration. You can set the number of requisite UPSs and redundant ones on the LCD or WebUI.
- If the mains and bypass use different power sources, ensure that the neutral wires of the mains and bypass input power sources are equipotential. For example, the mains and bypass inputs are from the same transformer.

2.4.1 Single UPS

This series uses a modular design in which multiple power modules are connected in parallel to deliver a high loading capacity. If a single power module is faulty, the other power modules continue working. When the load power is small, even a single UPS can provide redundant capacity, which ensures high reliability.

2.4.2 Parallel System

In a parallel system, mains input, bypass input, and AC output terminals of UPSs are connected in parallel, separately. Energy control modules (ECMs) on different UPSs are connected over parallel cables to synchronize UPS outputs to supply

power to loads. If one UPS fails, the other UPSs continue supplying power to loads.

Figure 2-36 Conceptual diagram of an N+X parallel system

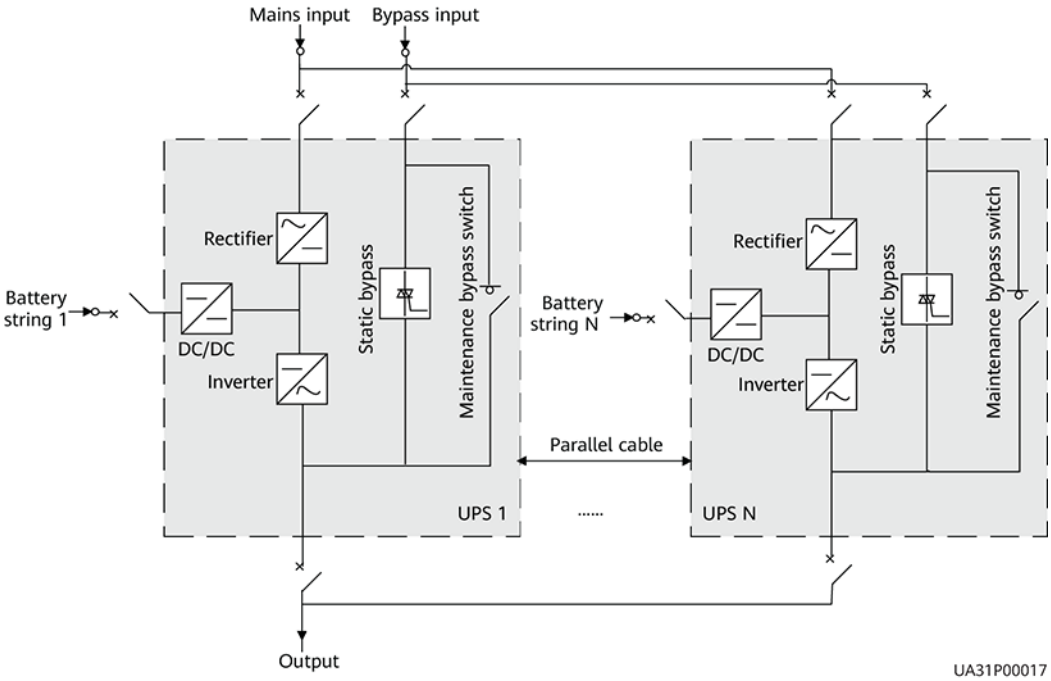

2.4.3 Dual-Bus System

A dual-bus system consists of two independent UPS systems. Each of these UPS systems in turn consists of one or more UPSs connected in parallel. Of the two UPS systems, one is a master system, and the other is a slave system. This design makes the dual-bus system highly reliable and suitable for loads with multiple input terminals. An optional static transfer switch (STS) can be installed to start the bus synchronization controller (BSC). The UPS systems work in inverter mode or bypass mode.

Figure 2-37 Conceptual diagram of a dual-bus system

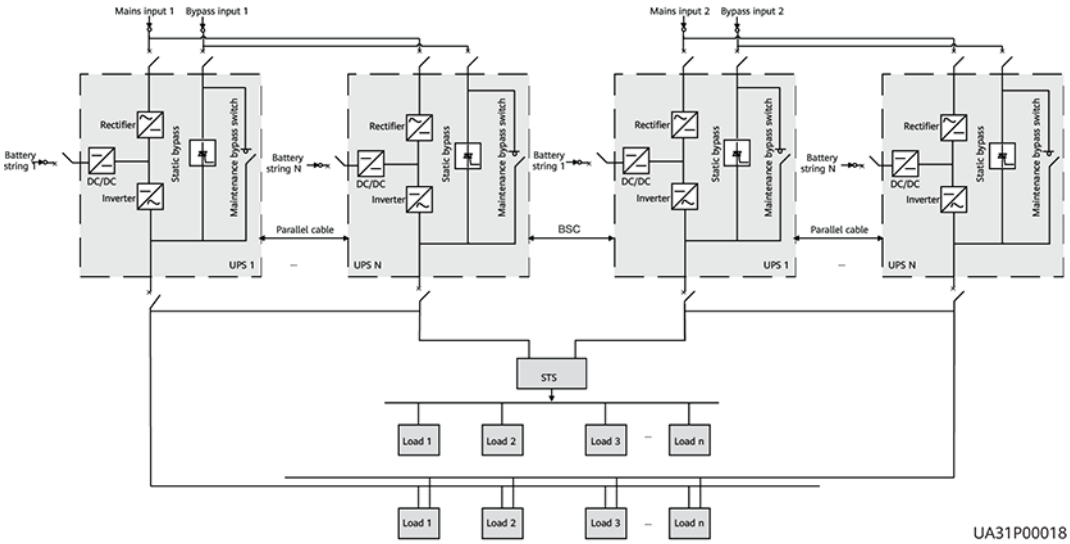

2.5 Optional Components

Component	Model		Function
BCB box	400 kVA, 500 kVA, 600 kVA	• PDU8000-0400DCV8-BXA001 • PDU8000-0630DCV8-BXA001 • PDU8000-0800DCV8-BXA001	Controls the connection between battery strings and the UPS, and supports overload, short-circuit protection, and remote trip control.
	800 kVA	• PDU8000-0630DCV8-BXA001 • PDU8000-0800DCV8-BXA001	
BBB box	400 kVA, 500 kVA, 600 kVA	• PDU8000-1250DCV8-BGA001 • PDU8000-2000DCV8-BGA001	Converges the energy of multiple battery strings.
	800 kVA	PDU8000-2000DCV8-BGA001	
Top air-flow cabinet	-		Exhausts air from the top.
Air filter	-		Prevents the UPS from dust and ensure normal operations.
IP21 component	-		Prevents water from dropping into the cabinet, protecting the cabinet to IP21.
ECM extended subrack	-		Install this subrack when the UPS is equipped with a backfeed protection card and dry contact extended card.
Dry contact extended card	-		Provides extended monitoring ports: five routes of relay output ports and five routes of input ports.
Backfeed protection card	-		Detects mains and bypass backfeed and provides protection.
Battery grounding failure detector	-		Detects current leakage and generates alarms. When equipped with a remote trip switch, the detector protects devices and prevents fire outbreak. Detects battery grounding failures and generates alarms when the ground leakage current exceeds the specified value.

Component	Model	Function
T/H sensor	-	Monitors the ambient temperature and humidity, and can be applied to batteries.
4G module	iIOT-WAC0411 **NOTE** This component is used only in the Chinese mainland.	Exchanges data with related equipment through wireless communication.
Battery temperature	-	Monitors the battery temperature.
Parallel cable	5 m/10 m/15 m	Connects UPSs in parallel.
BSC cable	10 m/15 m/60 m	Transmits bus synchronization signals in a dual-bus system.

NOTE

- If an IP21 component is installed, cables cannot be routed from the top of the cabinet.
- The ECM expansion subrack does not support onsite installation. If you require this optional component, specify it when you purchase the device and the component will be preinstalled.

3 Installation

3.1 Installation Preparations

3.1.1 Site

3.1.1.1 UPS Dimensions

Ensure that the floor or installation support can bear the weight of the UPS5000, batteries, and battery racks. The weight of batteries and battery racks depends on the UPS configuration for the site.

Figure 3-1 Dimensions (400 kVA/500 kVA, unit: mm)

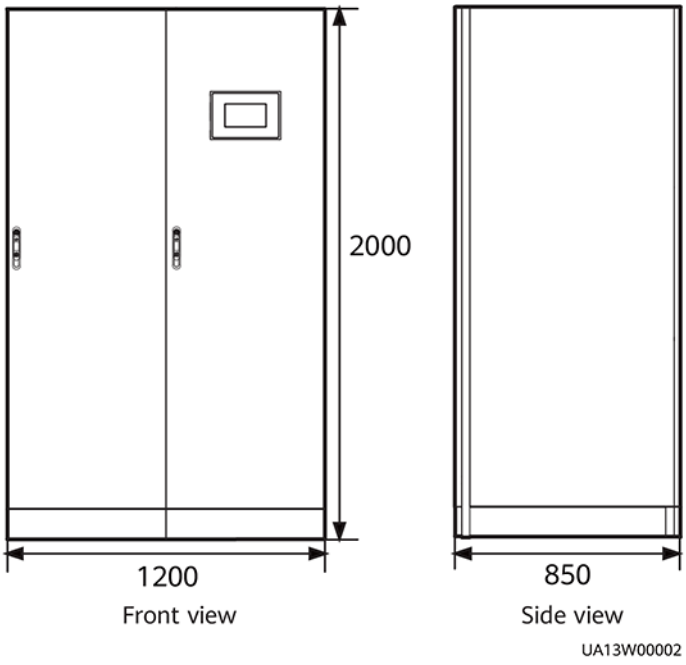

Figure 3-2 Dimensions (600 kVA, unit: mm)

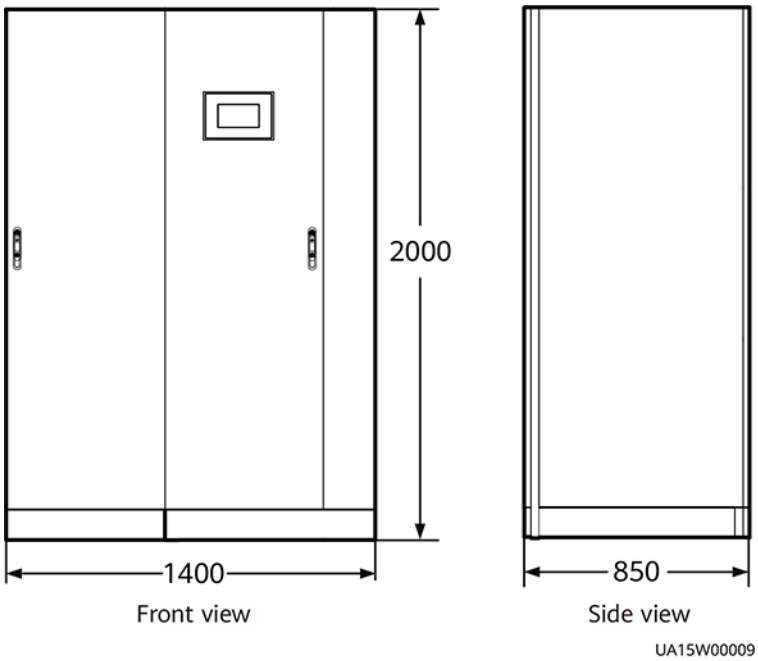

Figure 3-3 Dimensions (800 kVA, unit: mm)

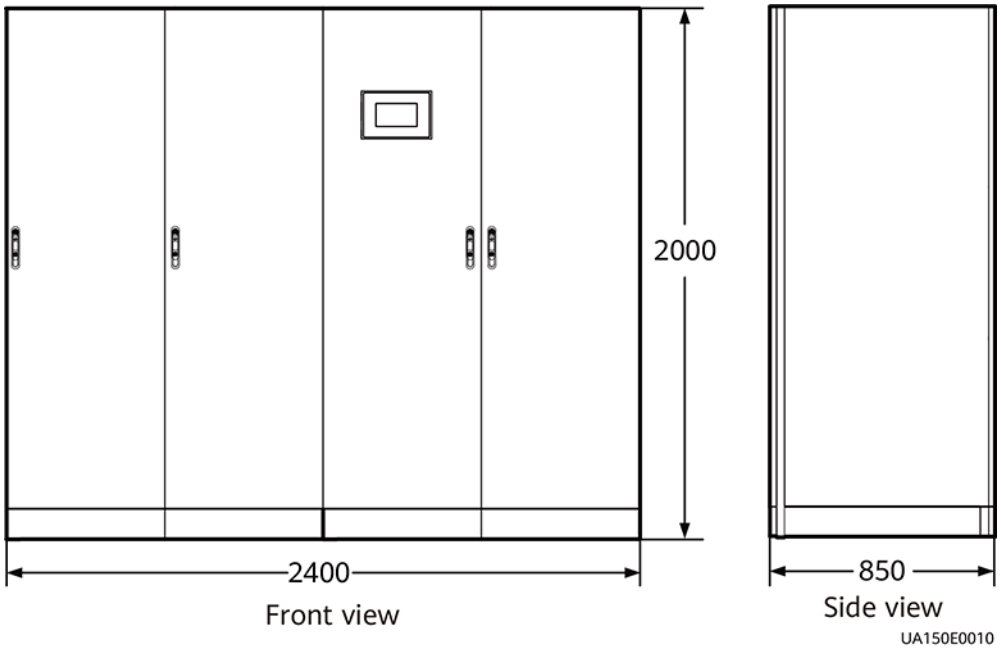

3.1.1.2 Installation Environment

- Do not install the UPS in an environment where the operating temperature and relative humidity are beyond the ranges stipulated in the technical specifications.
- Install the UPS away from water sources, heat sources, and flammable or explosive materials. Keep the UPS away from direct sunlight, dust, volatile gases, corrosive materials, and air dense with salt particles.

- Do not install the UPS in environments with conductive metal scraps in the air.
- The optimal operating temperatures for valve-regulated lead-acid batteries (VRLA batteries) are 20–30°C. Operating temperatures higher than 30°C shorten the battery lifespan and operating temperatures lower than 20°C reduce the battery backup time.

3.1.1.3 Installation Clearances

Reserve sufficient clearances around the cabinet to facilitate operations and ventilation:

- Reserve a clearance of at least 800 mm from the front of the cabinet.
- Reserve a clearance of at least 500 mm from the top of the cabinet.
- If a top air-flow cabinet is deployed, the UPS can be installed against a wall and no space needs to be reserved at the rear (except the 800 kVA UPS). If no top air-flow cabinet is deployed, at least 500 mm space should be reserved at the rear for ventilation. If the UPS will be operated from the rear, at least 800 mm space should be reserved for operations.

Figure 3-4 shows the clearances reserved for a 400 kVA cabinet.

Figure 3-4 Reserved clearances (unit: mm)

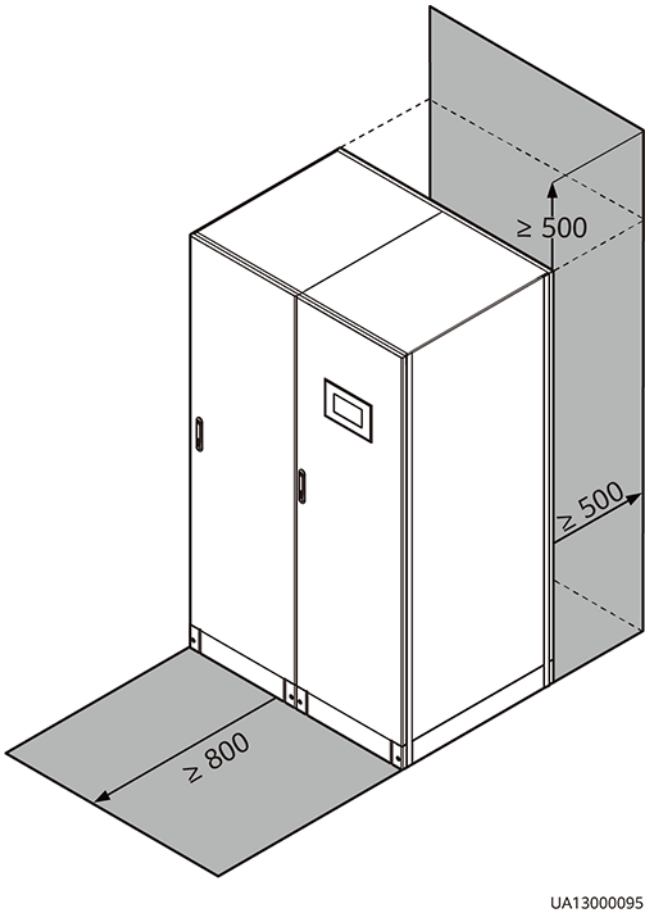

3.1.2 Tools

The onsite operation personnel can select tools based on the site requirements.

Personal Protective Equipment

Safety helmet	Goggles	Protective shoes	Reflective vest
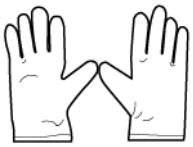 ESD gloves	Insulated gloves	Protective gloves	Safety harness
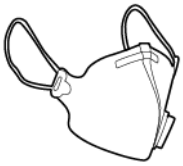 Dust mask	Insulated shoes	-	-

Transportation tools

Electric forklift	Manual pallet truck	Lifting trolley	-

Hardware Installation Tools

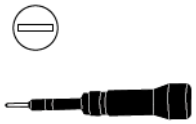 Flat-head insulated torque screwdriver (M2.5)	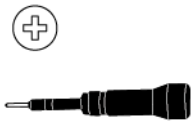 Phillips insulated torque screwdriver (M4/M5/M6)	Insulated torque socket wrench Including extended sockets (M8/M10/M12/M16)	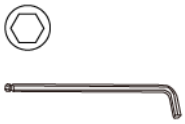 Hex key
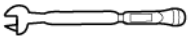 Adjustable torque wrench	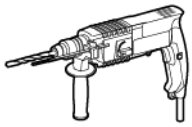 Hammer drill	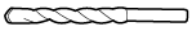 Hammer drill bit (Φ16 mm)	Claw hammer
Electric screwdriver	Step ladder	Pliers	Rubber mallet
Utility knife	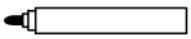 Marker	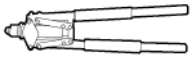 Rivet gun	Insulated ladder

Cable Installation Tools

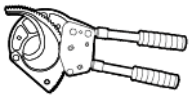 Cable cutter	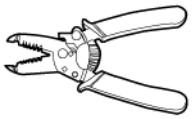 Wire stripper	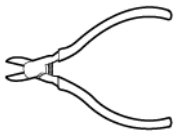 Diagonal pliers	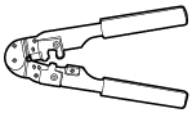 RJ45 crimping tool
Electro-hydraulic pliers	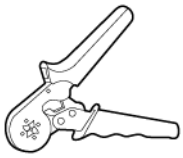 Cord end terminal crimping tool	Heat gun	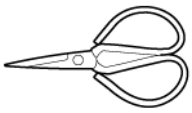 Scissors

Measurement Instruments

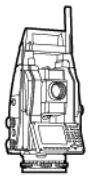 Height gauge	Laser locator	Electroprobe	Thermometer
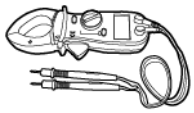 Clamp meter	Soft measuring tape	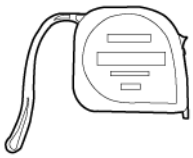 Steel measuring tape	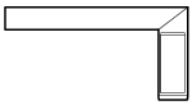 Square
Level	Laptop	Level gauge	Multimeter

Network tester	Phase sequence meter	Dielectric strength tester	Megohmmeter

Machinery

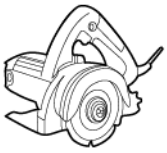 Small cutter	Cable reel	-	-

Engineering Auxiliary Materials

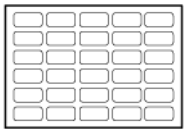 Label	Cable tie	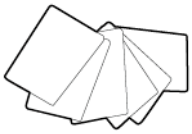 Cotton cloth	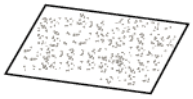 Sandpaper
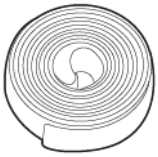 Heat-shrink tubing	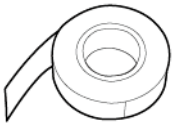 Insulation tape	-	-

Other Tools

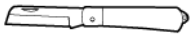 Electrician's knife	Hacksaw	Powder marker	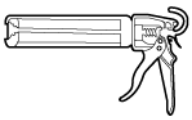 Glue gun
Brush	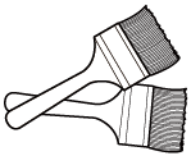 Paint brush	Vacuum cleaner	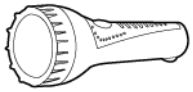 Flashlight
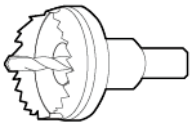 Hole saw	Insulation pad	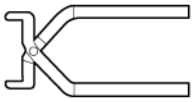 SPD extracting tool	Internal resistance tester

3.1.3 Power Cables

NOTICE

- The UPS can generate large leakage currents. A breaker that provides leakage current protection is not recommended.
- If multiple UPSs are to be connected in parallel, input and output power cables for each UPS should have the same length and specifications.
- The TN-C system is supported when the input N and PE are connected.

- When selecting, connecting, and routing power cables, follow local safety regulations and rules.
- If external conditions such as cable layout or ambient temperatures change, perform verification in accordance with the IEC-60364-5-52 or local regulations.
- If the rated voltage is 400 V, multiply the currents by 0.95. If the rated voltage is 415 V, multiply the currents by 0.92.
- If primary loads are non-linear loads, increase the cross-sectional areas of neutral wires 1.5–1.7 times.
- The nominal battery discharge current refers to the current of forty 12 V batteries at 480 V in standard configuration.

 Copyright © Huawei Digital Power Technologies Co., Ltd.

- The maximum battery discharge current refers to the current when forty 12 V batteries in standard configuration, that is, two hundred and forty 2 V battery cells (1.67 V/cell), stop discharging.
- The battery cable specifications are selected based on 40 batteries by default and compatible with application scenarios with 30–44 batteries.
- When the mains input and bypass input share a power source, configure both types of input power cables as mains input power cables. The cables listed in **Table 3-1** and **Table 3-2** are used only when the following requirements are met:
  - Multi-core cables are recommended for the mains and bypass input and output power cables, and single-core cables are recommended for the battery cables.
  - Routing mode: Mains and bypass input and output power cables are routed over a ladder or bracket (E in IEC 60364-5-52), and the distance between cables is greater than twice the cable diameter. Battery cables are routed over a ladder or bracket in a single layer (F in IEC 60364-5-52).
  - The ambient temperature is 30°C.
  - The AC voltage loss is less than 3%, and the DC voltage loss is less than 1%.
  - Cable type: copper flexible cable whose conductor supports the maximum operating temperature of 90°C
  - The length of the AC power cables of a UPS is no longer than 30 m and DC power cables no longer than 50 m.

Table 3-1 and **Table 3-2** list the recommended cross-sectional areas for power cables. Note that the currents listed are measured at a rated voltage of 380 V (line voltage).

Table 3-1 Recommended cross-sectional areas for power cables (350 kVA–550 kVA)

Item			350 kVA	400 kVA	450 kVA	500 kVA	550 kVA
Mains input	Mains input current (A)		622	711	800	889	977
	Recommended cross-sectional area (mm^2)	L1	2 x (4 x 185)	2 x (4 x 240)	3 x (4 x 185)	3 x (4 x 185)	3 x (4 x 240)
		L2					
		L3					
		N					
		PE	185	240	2 x 150	2 x 150	2 x 185
Bypass input	Bypass input current (A)		532	608	684	760	836

Item			350 kVA	400 kVA	450 kVA	500 kVA	550 kVA
	Recommended cross-sectional area (mm^2)	L1	2 x (4 x 185)	2 x (4 x 240)	3 x (4 x 185)	3 x (4 x 185)	3 x (4 x 240)
		L2					
		L3					
		N					
		PE	185	240	2 x 150	2 x 150	2 x 185
Output	Output current (A)		532	608	684	760	836
	Recommended cross-sectional area (mm^2)	U	2 x (4 x 185)	2 x (4 x 240)	3 x (4 x 185)	3 x (4 x 185)	3 x (4 x 240)
		V					
		W					
		N					
		PE	185	240	2 x 150	2 x 150	2 x 185
Battery input (lead-acid battery)	Nominal discharge current (A)		768	877	987	1096	1206
	Maximum discharge current (A)		919	1051	1182	1313	1444
	Recommended cross-sectional area (mm^2)	+	2 x (3 x 185)	2 x (3 x 240)	3 x (3 x 150)	3 x (3 x 185)	3 x (3 x 240)
		N					
		-					
		PE	185	240	240	2 x 150	2 x 185
Battery input (SmartLi)	Nominal battery discharge current (A)		720	822	925	1028	1131
	Maximum battery discharge current (A)		903	1032	1161	1290	1419
	Recommended cross-sectional area		For details, see IEC-60364-5-52 and SmartLi User Manual.				

Table 3-2 Recommended cross-sectional areas for power cables (600 kVA–800 kVA)

Item			600 kVA	650 kVA	700 kVA	750 kVA	800 kVA
Mains input	Mains input current (A)		1066	1155	1244	1333	1422
	Recommended cross-sectional area (mm^2)	L1	4 x (4 x 185)	4 x (4 x 240)	4 x (4 x 240)	4 x (4 x 240)	4 x (4 x 240)
		L2					
		L3					
		N					
		PE	2 x 185	2 x 240	2 x 240	2 x 240	2 x 240
Bypass input	Bypass input current (A)		912	988	1064	1140	1215
	Recommended cross-sectional area (mm^2)	L1	4 x (4 x 185)	4 x (4 x 240)	4 x (4 x 240)	4 x (4 x 240)	4 x (4 x 240)
		L2					
		L3					
		N					
		PE	2 x 185	2 x 240	2 x 240	2 x 240	2 x 240
Output	Output current (A)		912	988	1064	1140	1215
	Recommended cross-sectional area (mm^2)	U	4 x (4 x 185)	4 x (4 x 240)	4 x (4 x 240)	4 x (4 x 240)	4 x (4 x 240)
		V					
		W					
		N					
		PE	2 x 185	2 x 240	2 x 240	2 x 240	2 x 240
Battery input (lead-acid battery)	Nominal discharge current (A)		1316	1425	1535	1645	1754
	Maximum discharge current (A)		1576	1707	1838	1970	2101
	Recommended cross-sectional area (mm^2)	+	3 x (3 x 240)	4 x (3 x 185)	4 x (3 x 240)	4 x (3 x 240)	4 x (3 x 240)
		N					
		-					
		PE	2 x 185	2 x 185	2 x 240	2 x 240	2 x 240

Item		600 kVA	650 kVA	700 kVA	750 kVA	800 kVA
Battery input (SmartLi)	Nominal battery discharge current (A)	1234	1336	1439	1542	1645
	Maximum battery discharge current (A)	1547	1677	1806	1935	2064
	Recommended cross-sectional area	For details, see IEC-60364-5-52 and SmartLi User Manual.				

NOTE

The rated voltage of the SmartLi is 512 V. The voltage is 408 V at the maximum discharge current.

NOTICE

When you connect power cables, comply with the tightening torque listed in **Table 3-3** to ensure secure connections and prevent safety risks.

Table 3-3 Power cable terminal requirements

Connector	Connection Mode	Bolt Specifications	Bolt Hole Diameter	Bolt Length	Torque
Mains input	Crimped DT terminals	M16	18 mm	400 kVA: 50 mm 500 kVA/600 kVA/800 kVA: 55 mm	120 N·m
Bypass input	Crimped DT terminals	M16	18 mm	400 kVA: 50 mm 500 kVA/600 kVA/800 kVA: 55 mm	120 N·m
Battery input	Crimped DT terminals	M16	18 mm	400 kVA: 50 mm 500 kVA/600 kVA/800 kVA: 55 mm	120 N·m
Output	Crimped DT terminals	M16	18 mm	400 kVA: 50 mm 500 kVA/600 kVA/800 kVA: 55 mm	120 N·m

 Copyright © Huawei Digital Power Technologies Co., Ltd.

Connector	Connection Mode	Bolt Specifications	Bolt Hole Diameter	Bolt Length	Torque
PE	Crimped DT terminals	M12	/	35 mm	47 N·m

Table 3-4 Recommended upstream input/downstream output/maintenance bypass breakers

UPS Capacity	Component	Specifications[a]
350 kVA	Mains input breaker	800 A/3P
	Bypass input breaker	630 A/3P
	Output branch breaker	630 A/3P
	Maintenance bypass breaker	630 A/3P
400 kVA	Mains input breaker	800 A/3P
	Bypass input breaker	630 A/3P
	Output branch breaker	630 A/3P
	Maintenance bypass breaker	630 A/3P
450 kVA	Mains input breaker	1000 A/3P
	Bypass input breaker	800 A/3P
	Output branch breaker	800 A/3P
	Maintenance bypass breaker	800 A/3P
500 kVA	Mains input breaker	1000 A/3P
	Bypass input breaker	800 A/3P
	Output branch breaker	800 A/3P
	Maintenance bypass breaker	800 A/3P
550 kVA	Mains input breaker	1250 A/3P
	Bypass input breaker	1000 A/3P
	Output branch breaker	1000 A/3P
	Maintenance bypass breaker	1000 A/3P
600 kVA	Mains input breaker	1250 A/3P
	Bypass input breaker	1000 A/3P
	Output branch breaker	1000 A/3P
	Maintenance bypass breaker	1000 A/3P

 Copyright © Huawei Digital Power Technologies Co., Ltd.

UPS Capacity	Component	Specifications[a]
650 kVA	Mains input breaker	1600 A/3P
	Bypass input breaker	1000 A/3P
	Output branch breaker	1000 A/3P
	Maintenance bypass breaker	1000 A/3P
700 kVA	Mains input breaker	1600 A/3P
	Bypass input breaker	1250 A/3P
	Output branch breaker	1250 A/3P
	Maintenance bypass breaker	1250 A/3P
750 kVA	Mains input breaker	1600 A/3P
	Bypass input breaker	1250 A/3P
	Output branch breaker	1250 A/3P
	Maintenance bypass breaker	1250 A/3P
800 kVA	Mains input breaker	1600 A/3P
	Bypass input breaker	1250 A/3P
	Output branch breaker	1250 A/3P
	Maintenance bypass breaker	1250 A/3P
a: Breakers configured for the 400 kVA UPS are used in circuits with a short-circuit current of less than 35 kA, and those for the 500/600/800 kVA UPS are used in circuits with a short-circuit current of less than 50 kA.		

NOTE

- The upstream input breakers recommended in the table are for reference only.
- The bypass input breaker and downstream output breaker specifications are recommended based on the rated UPS capacity. If the UPS needs to be overloaded, adjust the breaker specifications based on the overload current.
- The maintenance bypass breaker is recommended based on the scenario where a single UPS is used. In a parallel system, adjust the breaker specifications based on the total current.
- The UPS can generate large leakage currents. A breaker that provides leakage current protection is not recommended.
- If multiple loads are connected, specifications for branch breakers must not exceed the recommended specifications.
- The breaker selection principle is to protect loads and cables, and the cascading principle is to realize specific protection.

3.1.4 SPD

NOTE

When installing the UPS, install a class C SPD for the UPS input to meet the requirements of OVC II.

- Recommended SPD specifications: VDE/TUV certification, voltage protection level Up ≤ 2500 V

  For a model with the 380 V/400 V/415 V voltage system, the operating voltage Uc should be greater than or equal to 280 V AC (phase voltage).
- Determine the maximum continuous operating voltage (Uc) based on the highest line voltage of the local power grid. It is recommended that the phase-to-N voltage be 1.1 times the phase voltage and the N-to-PE voltage be the same as the phase voltage.
- If SPD status detection is required, connect the SPD status detection cable to the SPD port on the dry contact card. The SPD dry contact must meet the SELV circuit requirements.

3.1.5 Transportation, Unpacking, and Checking

NOTICE

- Only trained personnel are allowed to move the cabinet. Use a forklift truck to remove the packed cabinet from the pallet.
- To prevent the equipment from falling over, secure it to a pallet truck or forklift using ropes before moving it. Move the equipment with caution to avoid bumping or falling, which may damage the equipment.
- After placing the equipment in the installation position, unpack it with care to prevent scratches. Keep the equipment stable during unpacking.
- After unpacking, check whether the fastening components and removable components are loose. If they are loose, notify the carrier and manufacturer immediately.
- If the installation environment is poor, take dustproof measures (for example, use a dust cover) after unpacking to prevent equipment damage due to dust buildup inside it.
- If the installation environment is poor, take anti-condensation measures after unpacking and keep the air conditioner running. Do not store the equipment in an environment where the temperature and humidity are uncontrollable for a long period of time. Otherwise, the equipment may be damaged due to condensation.

Step 1 Use a forklift truck to transport the cabinet to the installation position.

Step 2 Remove the packing materials and set the accessories aside.

Step 3 Check that the cabinet is intact.

1. Visually inspect the cabinet appearance for damage caused during transportation. If any damage is found, take photos and contact the carrier.

2. Check whether the cabinet accessories are complete and correct according to the packing list. If there is any discrepancy, keep a record and contact the supplier immediately.

Step 4 Remove the bolts that secure the cabinet to the pallet and move the cabinet from the pallet.

Figure 3-5 Removing the pallet

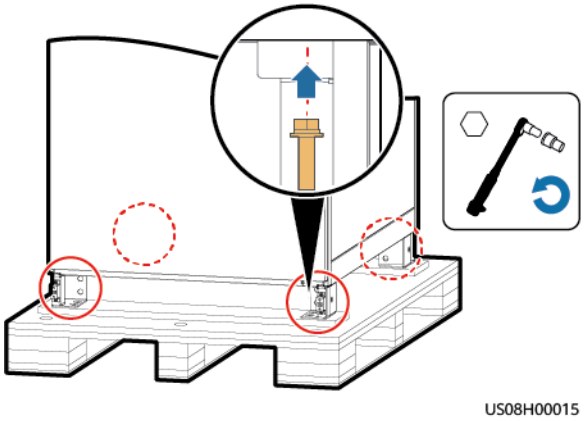

----End

3.1.6 (Optional) Splitting the Power Cabinet and Bypass Cabinet (400 kVA, 500 kVA, or 600 kVA UPS)

Context

- If the door of the power distribution equipment room is not wide enough to move the UPS, you can split the power cabinet and bypass cabinet before the movement.
- The power cabinet and bypass cabinet of the 400 kVA, 500 kVA, and 600 kVA UPS can be split in a similar way. This section describes how to split cabinets of the 400 kVA UPS.

NOTICE

Put away the removed screws and connecting plates to facilitate future cabinet combination.

Table 3-5 and Table 3-6 list the specifications and number of screws to be removed.

Table 3-5 Specifications and number of screws (400 kVA or 500 kVA UPS)

Position	Screw Specifications	Quantity (PCS)
Flexible copper bar	M12x35	26

Position	Screw Specifications	Quantity (PCS)
Battery copper bar component	M8x20	4
Top connecting plate	M6x30	8
Middle connecting plate	M6x30	8
Bottom connecting plate	M12x35	8

Table 3-6 Specifications and number of screws (600 kVA UPS)

Position	Screw Specifications	Quantity (PCS)
Flexible copper bar	M12x45 screw assembly	26
Battery copper bar component	M6x30 screw assembly	4
Top connecting plate	M6x20 screw assembly	8
Middle connecting plate	M6x20 screw assembly	8
Bottom connecting plate	M12x35 screw assembly	8

Procedure

Step 1 Open the front door of the bypass cabinet and remove the covers of the power distribution subrack.

NOTE

The covers of the power distribution subrack can be removed from the bypass cabinet only when all switches are OFF.

Figure 3-6 Removing the covers of the power distribution subrack

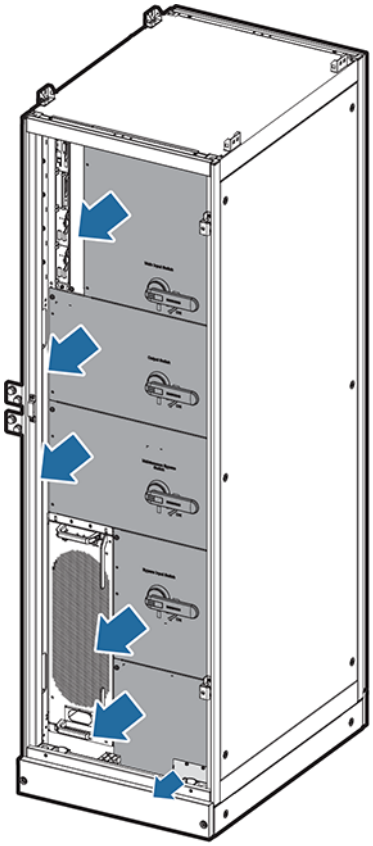

UA13H00002

Step 2 Remove the rear covers from the power cabinet and bypass cabinet.

Step 3 Remove the cable terminals that connect the system signal interface board in the power cabinet to the bypass cabinet.

Disconnect cables by referring to **Figure 3-7** and **Table 3-7**, and cut off the cable ties on the disconnected cables.

Figure 3-7 Silk screens on the system signal interface board in the power cabinet

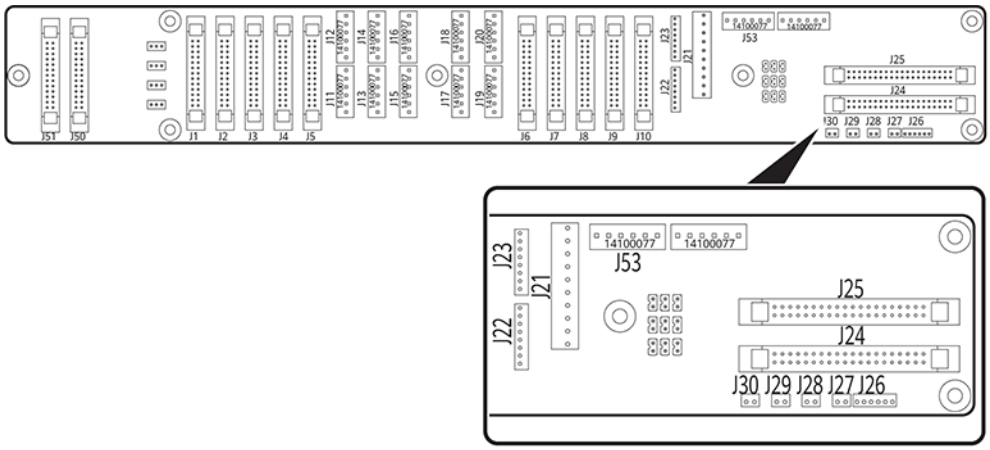

UA13000071

Table 3-7 Mapping between cables and ports on the system signal interface board

Bypass Cabinet Cable Name	Label on the Cable to be Connected to the System Signal Interface Board	Port Silk Screen on the System Signal Interface Board in the Power Cabinet	Quantity (PCS)
Bypass module DL37 cable	W301_J21	J21	1
	W303_J24	J24	1
ECM 8-pin cable	W305_J22	J22	1
ECM system monitoring bus	W307_J25	J25	1
CT cable	W309_J26	J26	1
Switch cable	SW1_J27	J27	1
	SW2_J28	J28	1
	SW4_J30	J30	1

CAUTION

Because the switch extension rod is sharp, exercise caution when removing the connecting copper bars to prevent personal injury.

NOTICE

Each copper bar has a number on it. Put away the removed copper bars. When you combine the power cabinet and bypass cabinet, strictly follow the numbers printed on the copper bars.

Step 4 Remove the flexible copper bars numbered 43, 44, and 45.

 Copyright © Huawei Digital Power Technologies Co., Ltd.

Figure 3-8 Removing flexible copper bars numbered 43, 44, and 45

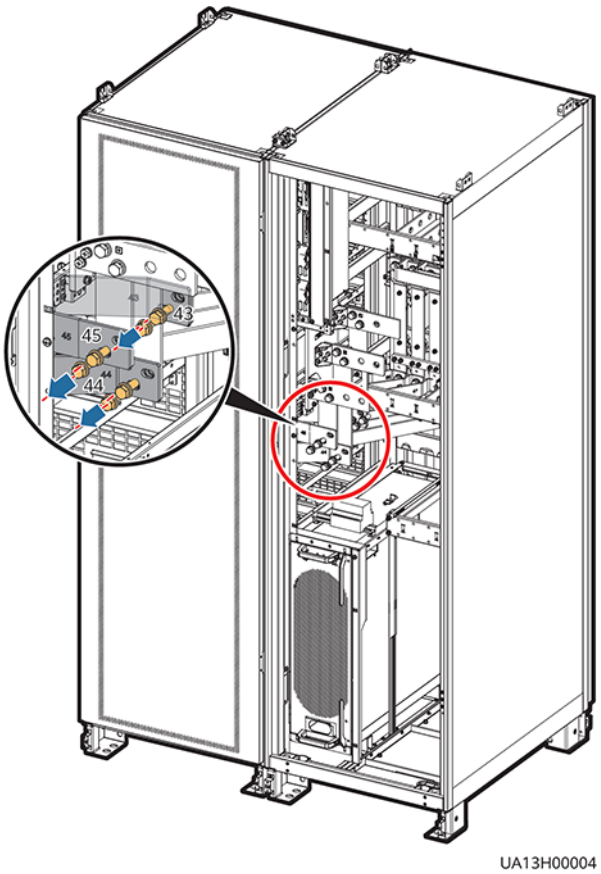

NOTE

For a 500 kVA or 600 kVA UPS, remove the flexible copper bars numbered 56, 58, and 60.

Step 5 Remove the battery copper bar component.

Figure 3-9 Removing the battery copper bar component

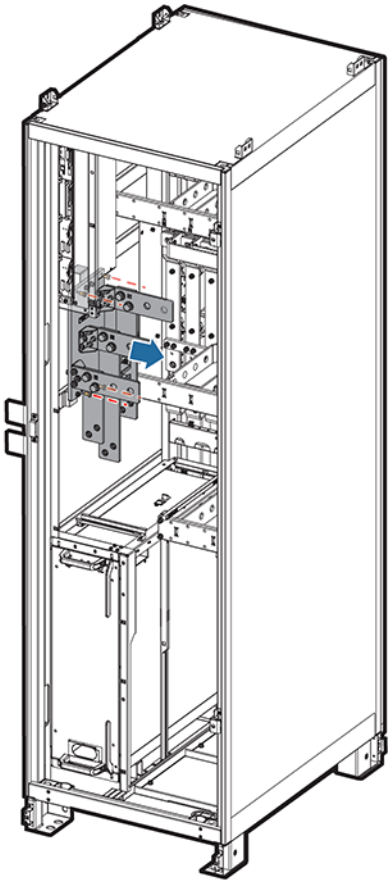

Step 6 Remove the flexible copper bars numbered 39–42.

Figure 3-10 Removing flexible copper bars numbered 39–42

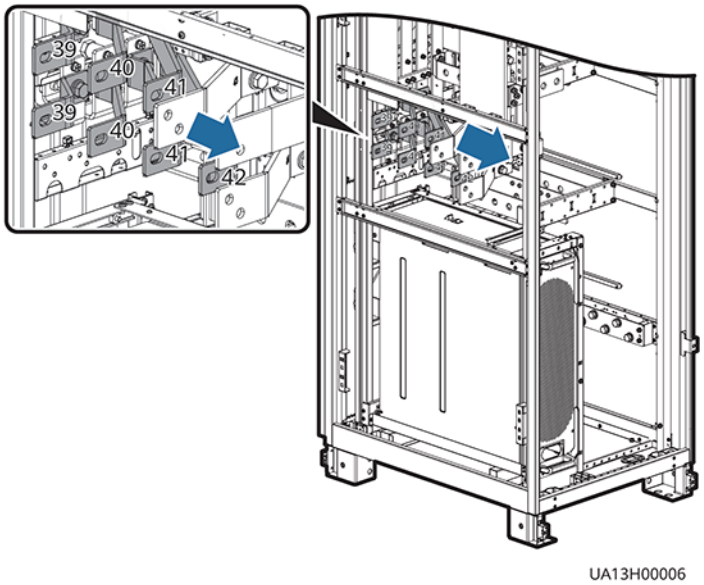

NOTE

For a 500 kVA or 600 kVA UPS, remove the flexible copper bars numbered 48–54.

Step 7 Remove the top, middle, and bottom connecting plates in sequence from the power cabinet and bypass cabinet.

NOTICE

Use a step ladder to remove the top connecting plates as the cabinet is high.

Figure 3-11 Removing connecting plates

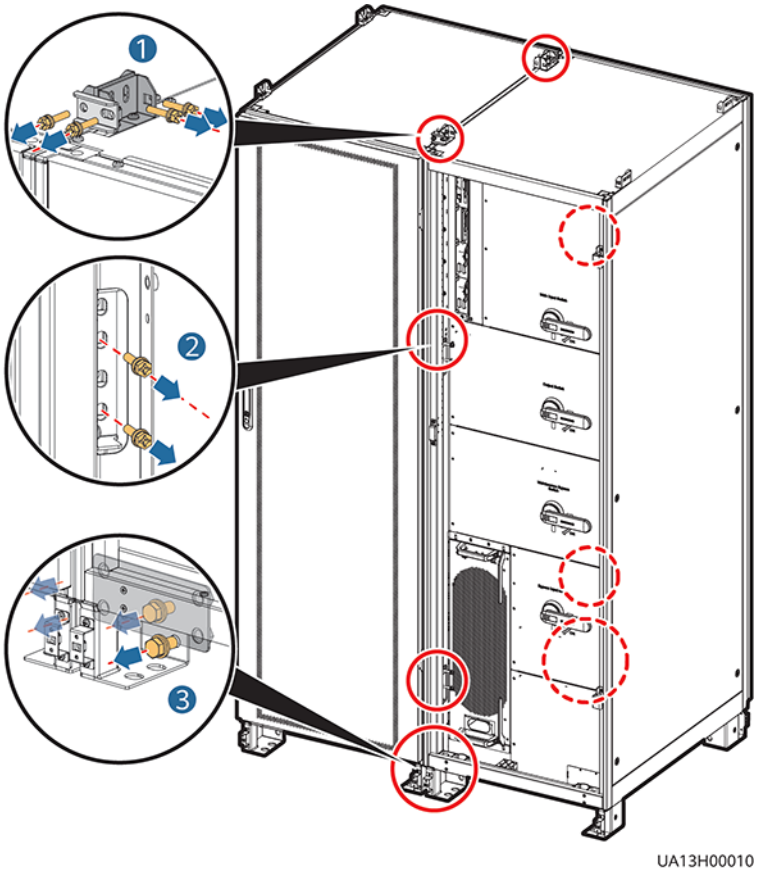

Step 8 Use a manual pallet truck to transport the power cabinet and bypass cabinet to the installation position. Ensure that the two cabinets align with each other.

----End

3.1.7 (Optional) Combining the Power Cabinet and Bypass Cabinet (400 kVA, 500 kVA, or 600 kVA UPS)

Procedure

Step 1 Install the bottom, middle, and top connecting plates for the power cabinet and bypass cabinet based on screw specifications in **Table 3-5** and **Table 3-6**.

Step 2 Install the removed flexible copper bars and battery copper bar components based on their numbers by referring to screw specifications in **Table 3-5** and **Table 3-6**.

Step 3 Reconnect the removed cables to the system signal interface board in the power cabinet, and bind the cables. For details, see **Table 3-7**.

Step 4 Check that the power cabinet and bypass cabinet are combined completely and securely.

Step 5 After checking that cabinets are combined properly, reinstall the side covers and rear covers.

----End

3.2 Installing a Single UPS

The installation process and cable connection principle of UPSs in standard configuration and UPSs in full configuration are the same. This section uses UPSs in full configuration as an example.

NOTICE

When you install the UPS and connect cables, do not step on the front door baffle plate and the door support at the bottom of the cabinet to prevent paint flake-off and deformation, as shown in **Figure 3-12**. Otherwise, the front door will not be properly closed.

Figure 3-12 Front door baffle plate

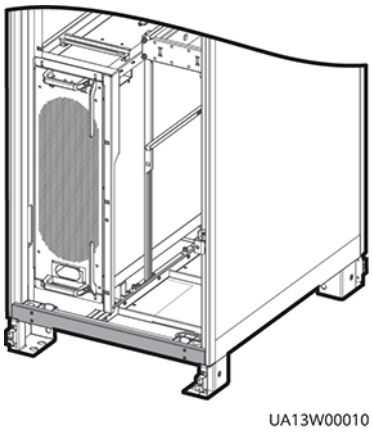

3.2.1 Installing a UPS (400 kVA, 500 kVA, or 600 kVA UPS)

3.2.1.1 Installing the UPS on the Ground

Context

NOTICE

- Ensure that the installation ground is flat.
- The marking-off template is delivered with the UPS.

Procedure

Step 1 Determine the cabinet installation positions on the ground based on holes in the marking-off template for ground installation.

NOTE

- A: mounting holes on the channel steel
- B: mounting holes on the floor

Figure 3-13 Mounting hole dimensions for the 400 kVA UPS and 500 kVA UPS (unit: mm)

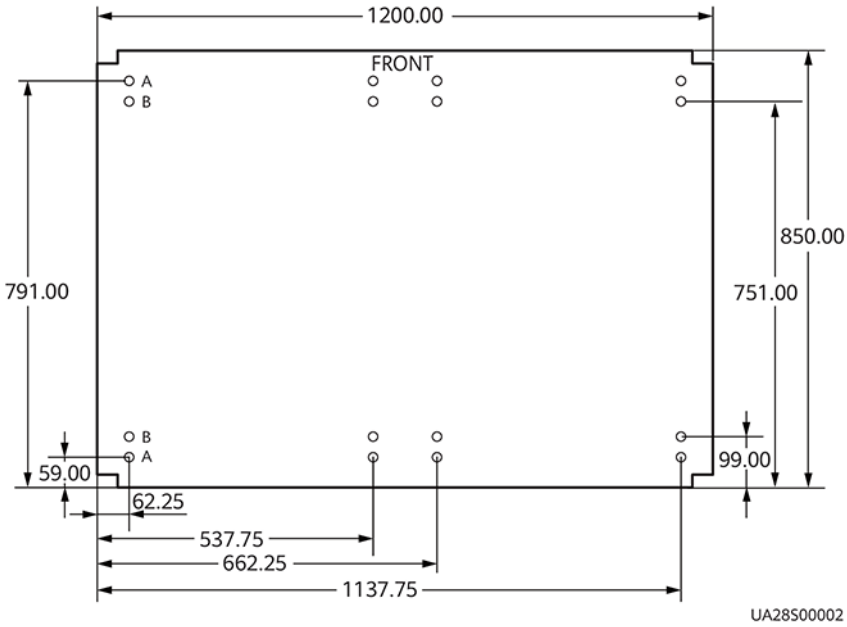

Figure 3-14 Mounting hole dimensions for the 600 kVA UPS (unit: mm)

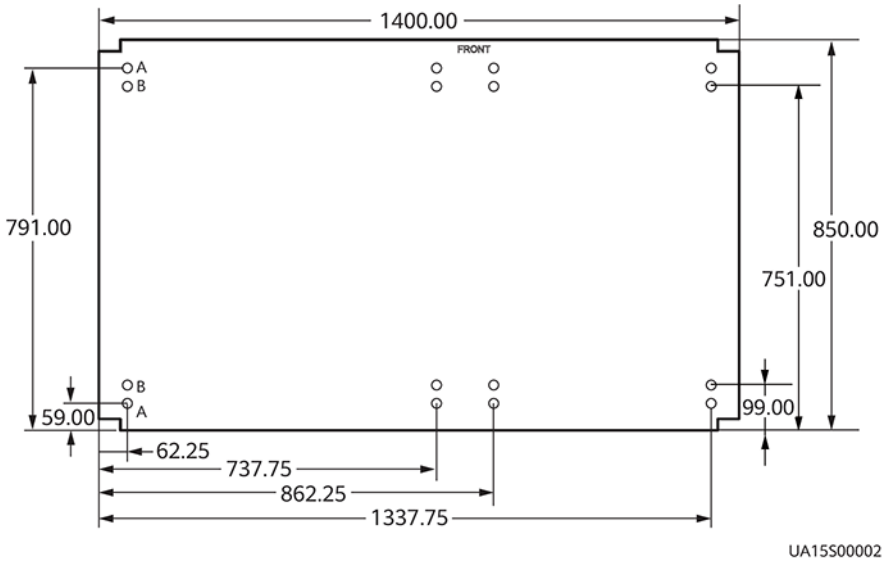

Step 2 Use a hammer drill to drill holes for installing expansion bolts, and install expansion sleeves in the holes. **Figure 3-15** shows expansion bolt composition. **Figure 3-16** shows how to install an expansion bolt.

Figure 3-15 Expansion bolt composition

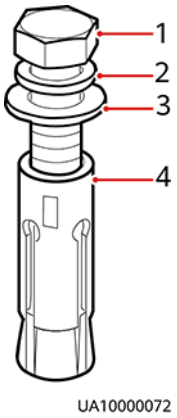

(1) M12 bolt (2) Spring washer (3) Flat washer (4) Expansion sleeve

NOTICE

Knock the expansion bolt into the hole until the expansion sleeve completely fits into the hole. The expansion sleeve must be completely buried under the ground to facilitate subsequent installation.

Figure 3-16 Installing an expansion bolt (unit: mm)

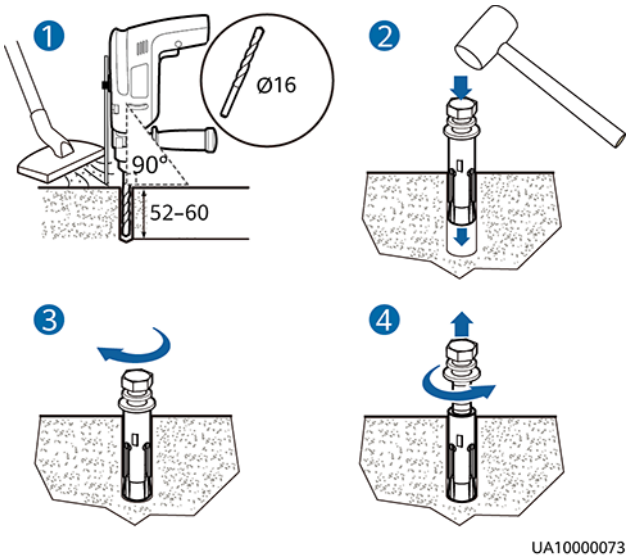

1. Drill holes in the ground by using a hammer drill. The hole depth is 52 mm to 60 mm.
2. Partially tighten the expansion bolt and vertically insert it into the hole. Knock the expansion bolt using a rubber mallet until the expansion sleeve is fully inserted into the hole.
3. Partially tighten the expansion bolt.
4. Remove the bolt, spring washer, and flat washer.

Step 3 Use a pallet truck to move the cabinet to the installation position.

Step 4 Secure the cabinet to the expansion bolt holes on the ground using M12x60 expansion bolts. The installation methods for different UPS models are the same. **Figure 3-17** shows how to secure a 400 kVA UPS cabinet.

Figure 3-17 Tightening expansion bolts

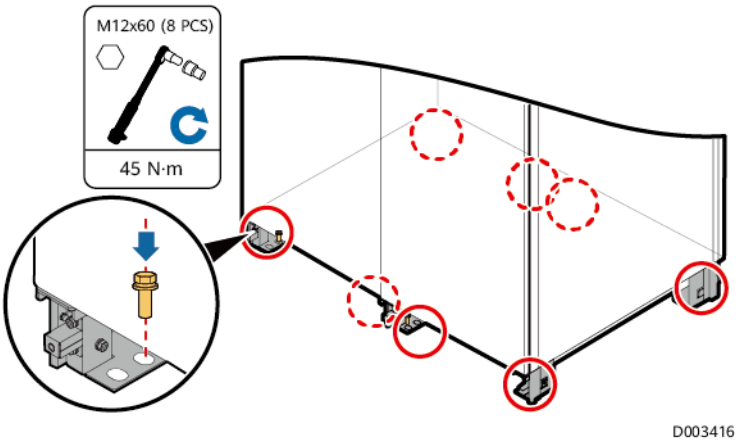

Step 5 Install the front, rear, left, and right anchor baffle plates. The installation methods for different UPS models are the same. **Figure 3-18** shows how to install anchor baffle plates for a 400 kVA UPS cabinet.

Figure 3-18 Installing the front, rear, left, and right anchor baffle plates

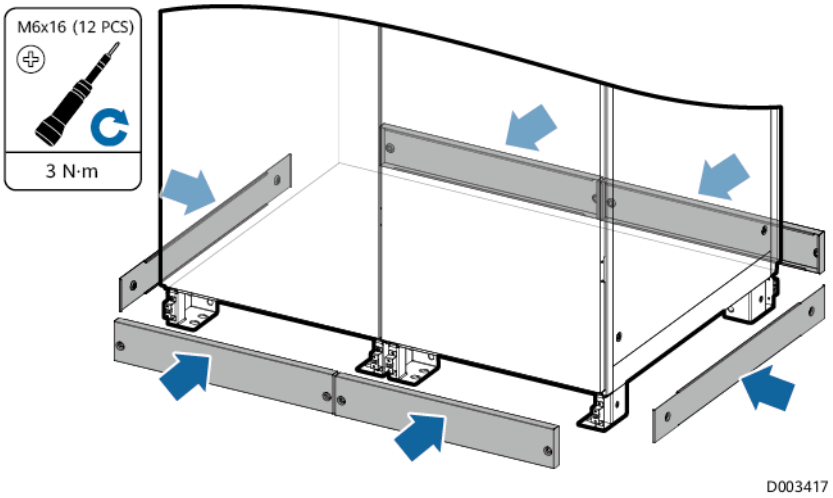

Step 6 To prevent misoperations, you are advised to install a lock (with the diameter of the effective lock cylinder being 5–10 mm) for the maintenance bypass switch. See **Figure 3-19** and **Figure 3-20**.

Figure 3-19 Installing a lock for the maintenance bypass switch (400 kVA UPS, 500 kVA UPS)

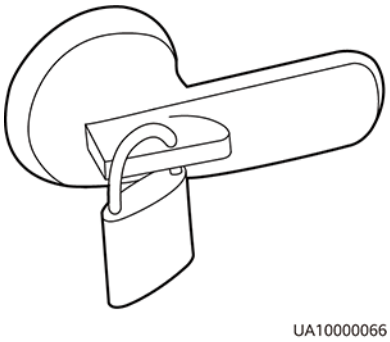

Figure 3-20 Installing a lock for the maintenance bypass switch (600 kVA UPS)

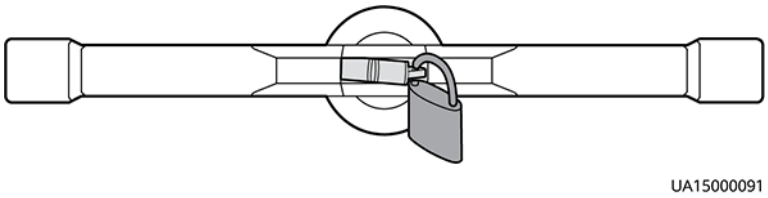

----End

3.2.1.2 Installing the UPS on Channel Steel

Context

NOTICE

- The Company does not provide channel steel or expansion bolts used for securing channel steel. It is recommended that the customer purchase at least 50 mm wide channel steel.
- Ensure that the spacing between external sides of a channel steel is 800 mm. Secure channel steel to the ground by using expansion bolts.
- Cabinet mounting holes must be aligned with channel steel mounting holes, and secure the cabinet to channel steel with bolts.
- Keep the channel steel surface flat.

Procedure

Step 1 Determine the cabinet installation positions on the channel steel based on holes in the marking-off template for channel steel installation.

NOTE

- A: mounting holes on the channel steel
- B: mounting holes on the floor

Figure 3-21 Mounting hole dimensions for the 400 kVA UPS and 500 kVA UPS (unit: mm)

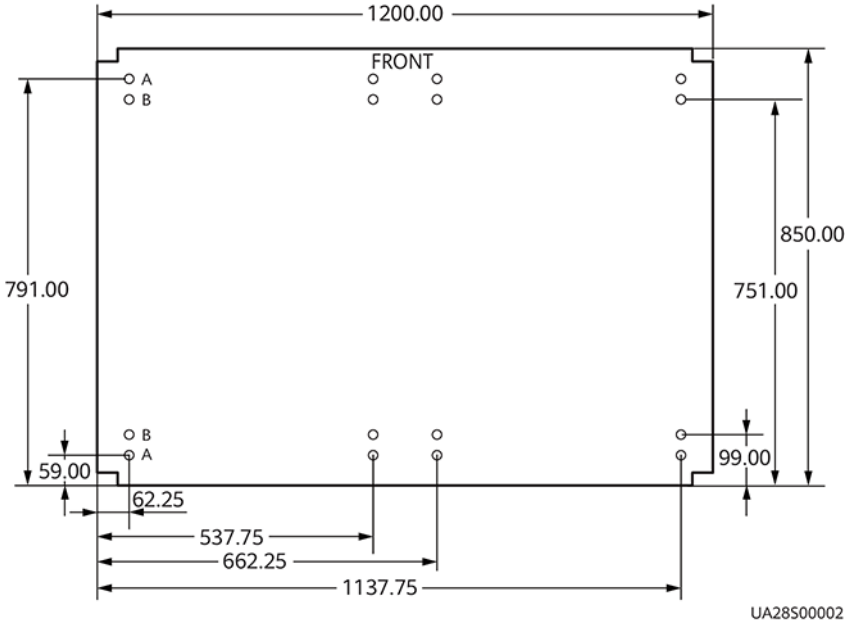

Figure 3-22 Mounting hole dimensions for the 600 kVA UPS (unit: mm)

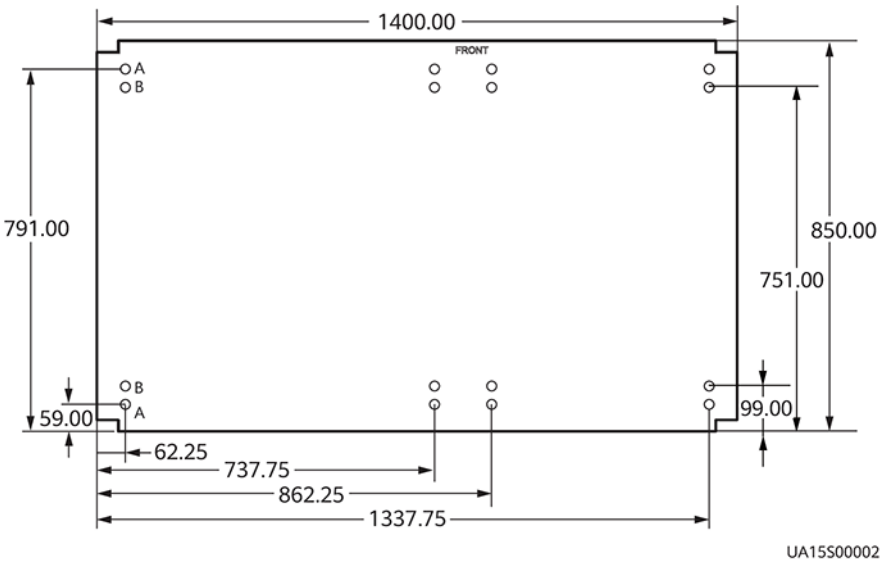

Step 2 Drill cabinet mounting holes in channel steel by using a hammer drill.

Step 3 Use a pallet truck to move the cabinet to the installation position.

Step 4 Use common M12x60 bolts to secure the cabinets into the mounting holes in the channel steel and tighten the bolts.

Step 5 Install the front, rear, left, and right anchor baffle plates.

----End

3.2.2 Installing a UPS (800 kVA)

3.2.2.1 Installing the UPS on the Ground

Determining the UPS Installation Position

NOTICE

- Ensure that the installation ground is flat.
- The marking-off template is delivered with the UPS.

Step 1 Determine the cabinet installation positions on the ground based on holes in the marking-off template for ground installation.

NOTE

- A: mounting holes on the channel steel
- B: mounting holes on the floor

Figure 3-23 Hole dimensions (unit: mm)

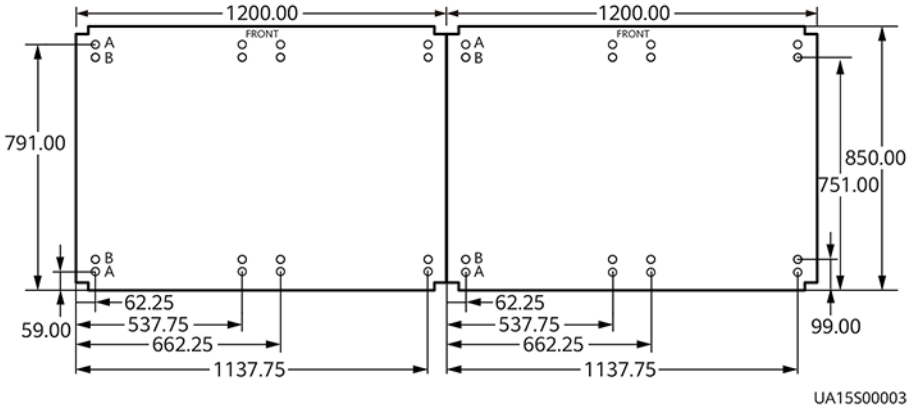

Step 2 Use a hammer drill to drill holes for installing expansion bolts, and install expansion sleeves in the holes. **Figure 3-24** shows expansion bolt composition. **Figure 3-25** shows how to install an expansion bolt.

Figure 3-24 Expansion bolt composition

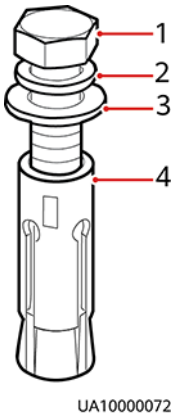

(1) M12 bolt (2) Spring washer (3) Flat washer (4) Expansion sleeve

NOTICE

Knock the expansion bolt into the hole until the expansion sleeve completely fits into the hole. The expansion sleeve must be completely buried under the ground to facilitate subsequent installation.

Figure 3-25 Installing an expansion bolt (unit: mm)

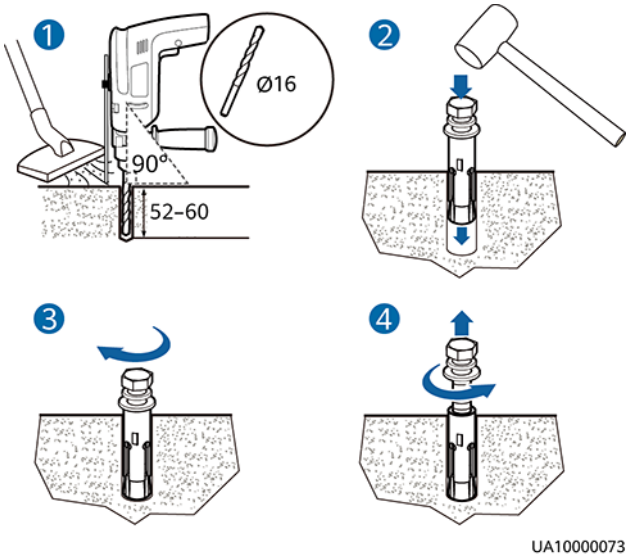

1. Drill holes in the ground by using a hammer drill. The hole depth is 52 mm to 60 mm.
2. Partially tighten the expansion bolt and vertically insert it into the hole. Knock the expansion bolt using a rubber mallet until the expansion sleeve is fully inserted into the hole.
3. Partially tighten the expansion bolt.
4. Remove the bolt, spring washer, and flat washer.

----End

Combining Power Cabinets and Bypass Cabinets

The power cabinets and bypass cabinets are separately packed for delivery. Before installing the UPS, combine the power cabinets and bypass cabinets. Before combining the cabinets, ensure that the required fittings are complete. **Table 3-8** lists the fittings.

Table 3-8 Fitting list

Mounting Fitting	Number of Fittings	Screw Specifications	Number of Bolts (PCS)	Torque	Remarks
Bottom connecting plate	2	M12x25	8	47	• Fittings are delivered with the UPS. You can see the fittings after unpacking the bypass cabinet. • The two flexible copper bars are numbered 52. • If holes are drilled for routing cables at the top of the cabinet, attach grommet strips on the hole edges to protect cables.
Top connecting plate	2	M6×30	8	3	
Flexible copper bar	2	M12x45	10	47	
Grommet strip	-	-	-	-	
Middle connecting plate	2	M6x30	4	3	Installed on the cabinet before delivery.

Step 1 Use a pallet truck to move the power cabinets and bypass cabinets to the mounting holes for the cabinets with the power cabinets on the left and the bypass cabinets on the right. Align the cabinets.

NOTE

Use a pallet truck to adjust the position of the bypass cabinets to align the front doors of the bypass cabinets with the front doors of the power cabinets.

Step 2 Open the front doors of the power cabinets and bypass cabinets.

Step 3 Install the connecting plates between the bypass cabinet and its adjacent power cabinet based on the following sequence: bottom, top, and middle connecting plates.

 Copyright © Huawei Digital Power Technologies Co., Ltd.

Figure 3-26 Installing connecting plates

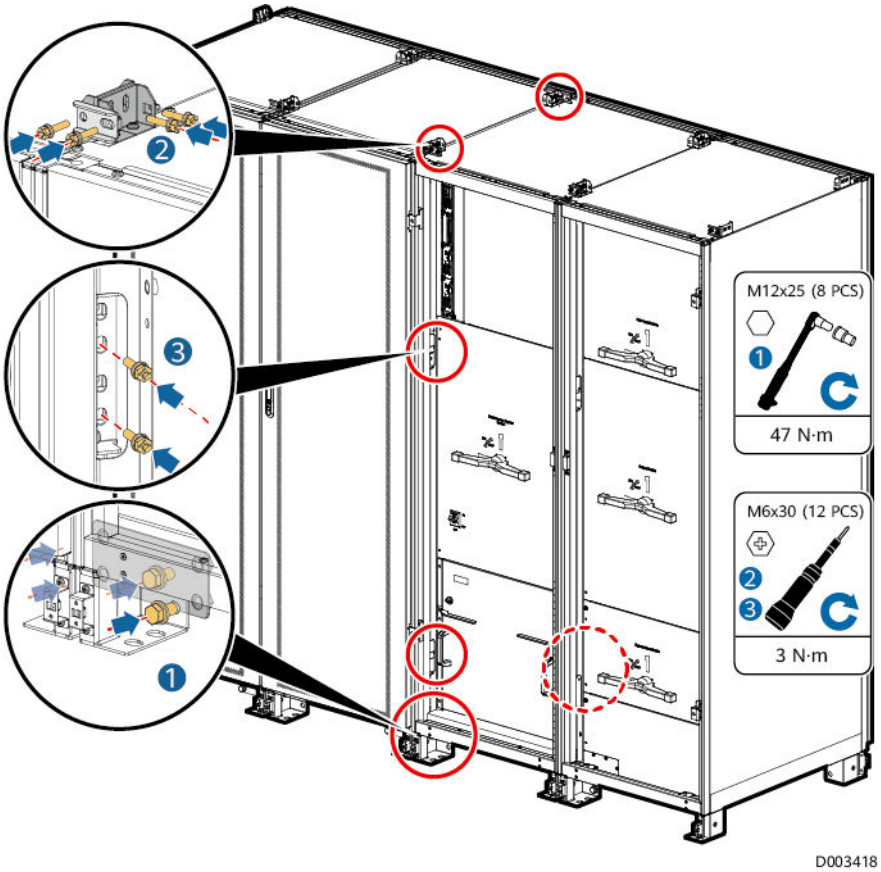

Step 4 Use M12x60 expansion bolts to secure the cabinets to the expansion bolt holes on the ground. **Figure 3-27** shows how to secure the power cabinets.

Figure 3-27 Tightening expansion bolts

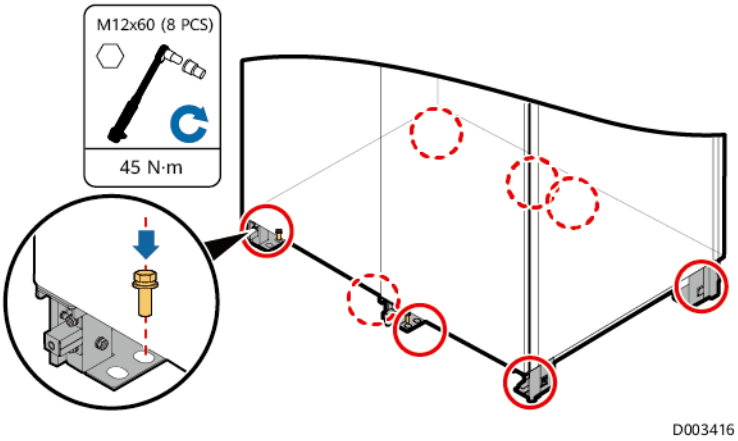

Step 5 Install the front, rear, left, and right anchor baffle plates.

Figure 3-28 Installing the front, rear, left, and right anchor baffle plates

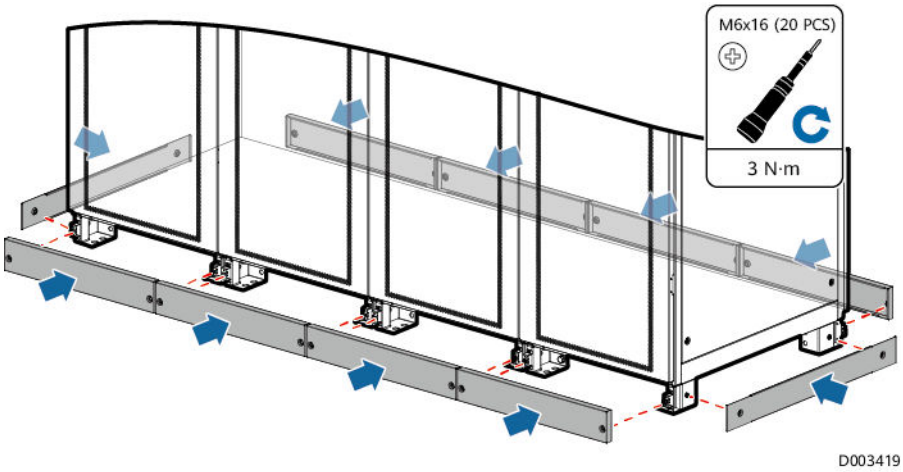

Step 6 Remove the front covers of the power distribution subrack from the bypass cabinets, as shown in **Figure 3-29**.

NOTE

The covers of the power distribution subrack can be removed from the bypass cabinet only when all switches are OFF.

Figure 3-29 Removing the front covers of the power distribution subrack

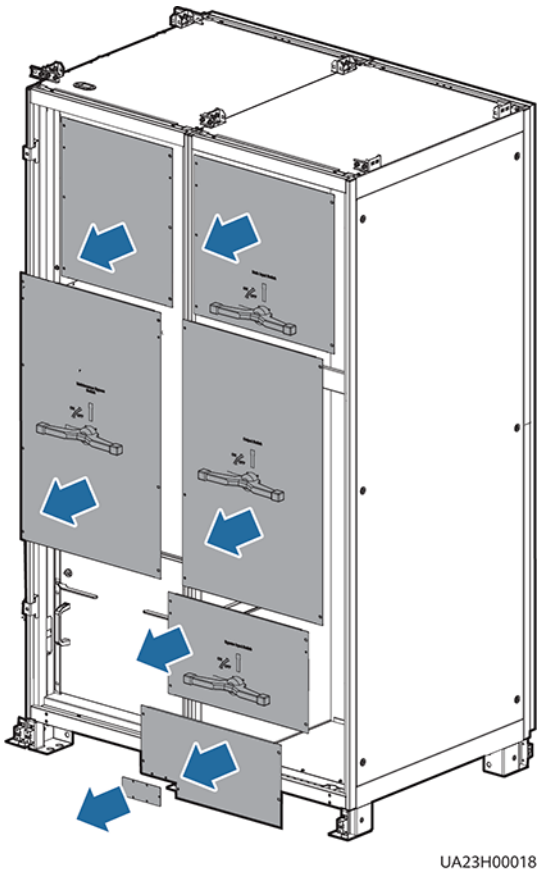

Step 7 Remove the rear covers from power cabinet 1 and its adjacent bypass cabinet.

Step 8 (Optional) Remove the extension rod of the maintenance bypass switch from the bypass cabinet.

NOTE

- To facilitate cabinet combination, remove the switch extension rod from the left bypass cabinet. The operation of removing the switch extension rod from the right bypass cabinet is optional.
- Put away the removed screws, washers, and switch extension rod which need to be reinstalled after cables are connected.
- When reinstalling the switch extension rod, keep the dowel level, as shown in **Figure 3-30**. Insert the switch extension rod to the blue mark, put washers, and tighten the slotted screw to reinstall the switch extension rod.

Figure 3-30 Removing the switch extension rod

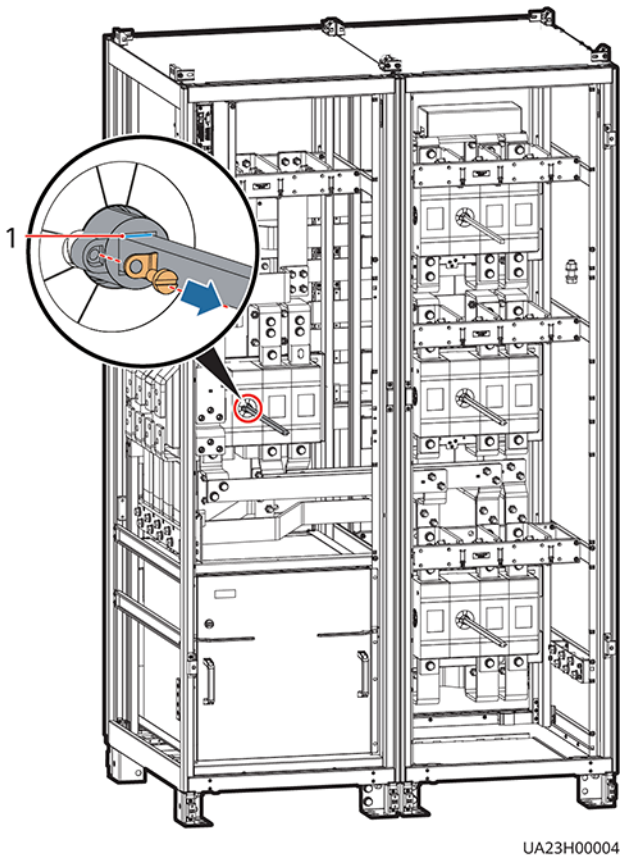

(1) Blue mark

Step 9 Install the flexible copper bars between power cabinet 1 and its adjacent bypass cabinet.

1. Cut off the cable ties bound between holes in flexible copper bars numbered 23, 24, 25, 26, and 30.
2. Secure the flexible copper bars numbered 23, 24, 25, 26, and 30 using M12x45 screws, as shown in **Figure 3-31**.

Figure 3-31 Securing flexible copper bars

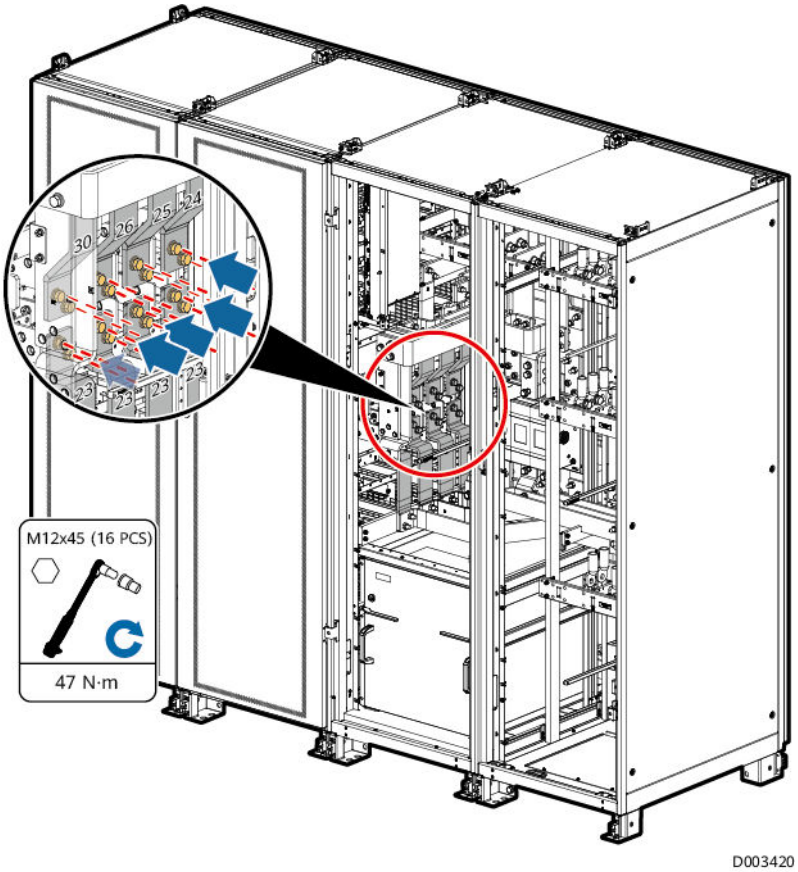

3. Remove filler panels from power cabinet 1. Take out two flexible copper bars numbered 52 from the fittings, and secure them to power cabinet 1 and its adjacent bypass cabinet respectively, as shown in **Figure 3-32**.

Figure 3-32 Installing the flexible copper bars numbered 52

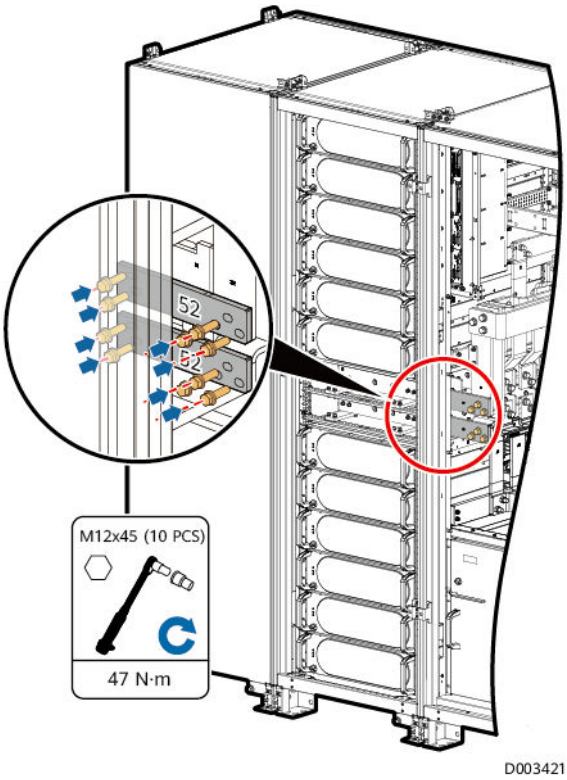

Step 10 Insert the cable terminals in the bypass cabinets into the corresponding ports on the system signal interface board in power cabinet 1. The system signal interface board is located at the rear of power cabinet 1. It can be seen if the cabinet rear cover is removed.

NOTICE

- Cut off the cable ties binding the cables to be connected in the bypass cabinet. When connecting the cables of the bypass cabinet to power cabinet 1, route the cables from the internal side of the column to the system signal interface board of power cabinet 1 so that the rear panels can be reinstalled on the bypass cabinet and power cabinet 1.
- After the cables have been connected, bind the cables to the column of the bypass cabinet and the binding holes on the system signal interface board. Verify that the cables are correctly connected and reinstall the rear panels.

The port silk screens on the system signal interface board in power cabinet 1 are shown in **Figure 3-33**. The mapping between the cables in the bypass cabinets and the ports on the system signal interface board is listed in **Table 3-9**. **Figure 3-34** shows cable connections for combined cabinets.

Figure 3-33 Silk screens on the system signal interface board in power cabinet 1

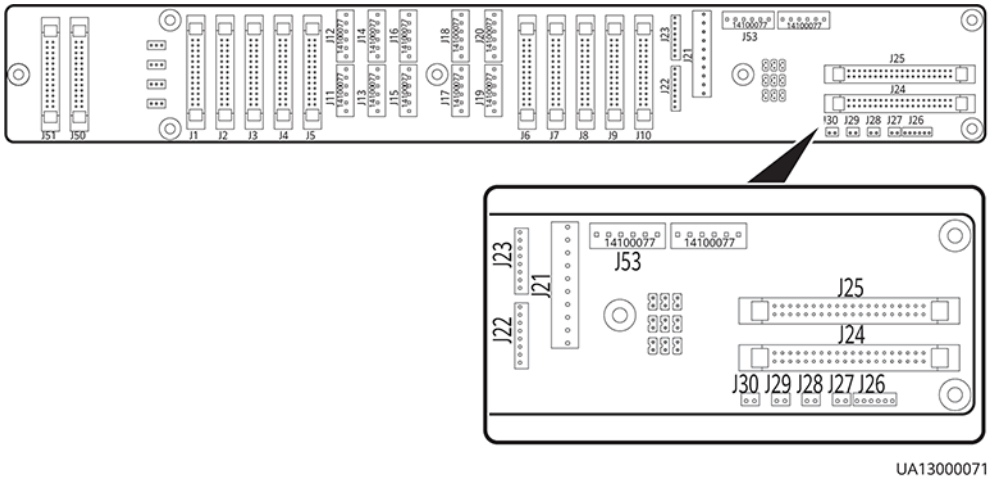

Table 3-9 Mapping between the cables in the bypass cabinet and the ports on the system signal interface board in power cabinet 1

Bypass Cabinet Cable Name	Bypass Cabinet Cable No.	Silk Screen on System Signal Interface Board in Power Cabinet or Cable No.	Quantity
Bypass module DL37 cable	W301_J21	J21	1
	W303_J24	J24	1
ECM 8-pin cable	W305_J22	J22	1
ECM system monitoring bus	W307_J25	J25	1
CT cable	W309_J26	J26	1
Switch cable	• Full configuration: 04091625-06 • Standard configuration: SW1310	04091626-23	1

NOTE

A standard configuration model has only one switch cable (maintenance bypass switch). A full configuration model has three switch cables (output switch, maintenance bypass switch, and bypass input switch). The following figure describes how to connect cables for combined cabinets using a full configuration model as an example.

Figure 3-34 Connecting cables for combined cabinets

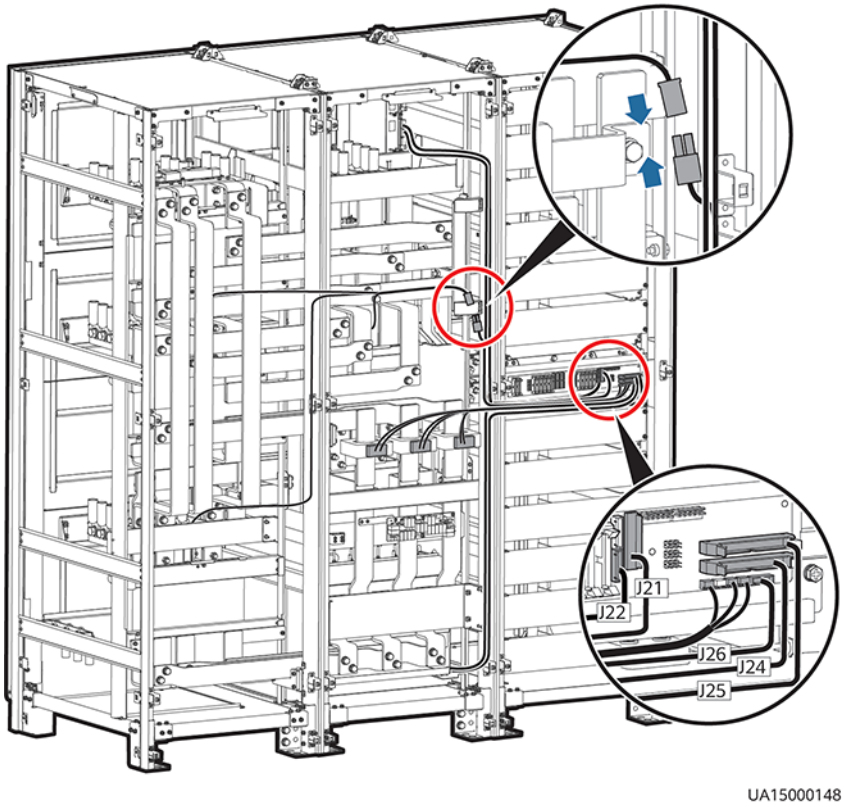

----End

3.2.2.2 Installing the UPS on Channel Steel

NOTICE

- The Company does not provide channel steel or expansion bolts used for securing channel steel. It is recommended that the customer purchase at least 50 mm wide channel steel.
- Ensure that the spacing between external sides of a channel steel is 800 mm. Secure channel steel to the ground by using expansion bolts.
- Keep the channel steel surface flat.

Step 1 Determine the cabinet installation positions on the channel steel based on holes in the marking-off template for channel steel installation.

NOTE

- A: mounting holes on the channel steel
- B: mounting holes on the floor

Figure 3-35 Hole dimensions (unit: mm)

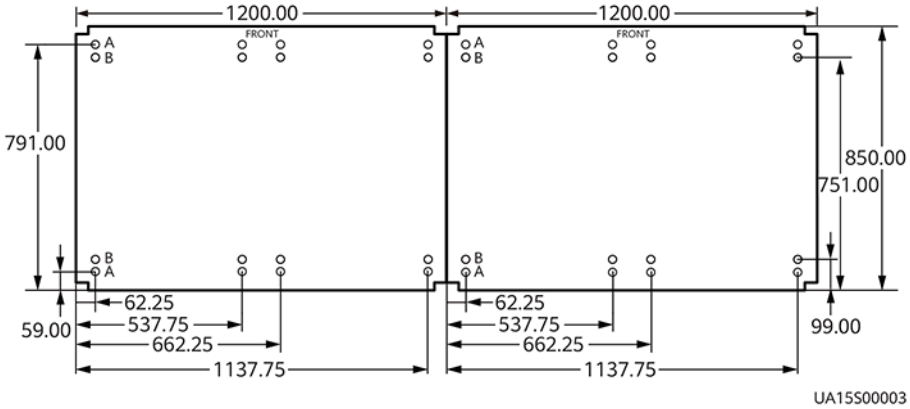

Step 2 Drill cabinet mounting holes in channel steel by using a hammer drill.

----End

Combining Power Cabinets and Bypass Cabinets

Step 1 The power cabinets and bypass cabinets are combined in the same way for ground installation and channel steel installation.

----End

Securing the UPS

Step 1 Use common M12x60 bolts to secure the cabinets into the mounting holes in the channel steel and tighten the bolts.

Step 2 Install the front, rear, left, and right anchor baffle plates.

----End

3.2.3 Installing Batteries

Context

DANGER

- Before installing batteries, read through the battery safety precautions, obtain the delivered battery installation guide, and install batteries as instructed.
- Wear insulated gloves and use insulated tools to prevent electric shocks or short circuits.
- Place the batteries in a correct way to prevent vibrations and shocks.
- Install the batteries from the lower layer to the upper layer to prevent falling over due to imbalance.

Procedure

Step 1 Install a battery rack and batteries.

For details, see the battery installation guide delivered along with batteries.

----End

3.2.4 Installing Optional Components

3.2.4.1 Installing an IP21 Component

Procedure

Step 1 Install leveling feet at the bottom of the IP21 component, with two long feet on the front and two short feet at the rear.

NOTE

- Refer to the "front" and "back" silk screens on the surface of the IP21 component.
- Select the mounting holes for leveling feet based on the cabinet width onsite.

Figure 3-36 Installing leveling feet

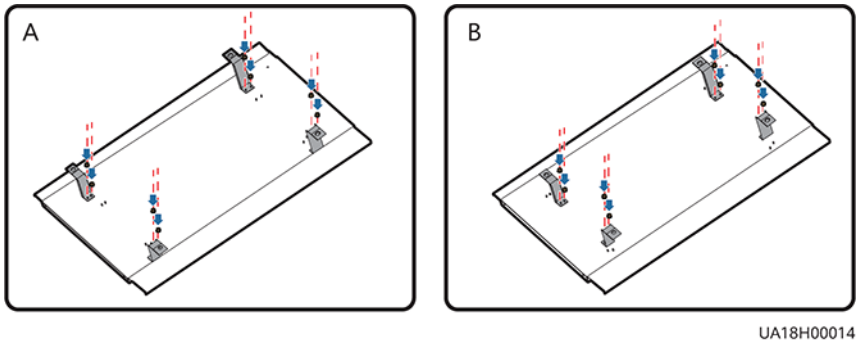

Step 2 Secure the IP21 component to the top of each cabinet.

Figure 3-37 Installing the IP21 component

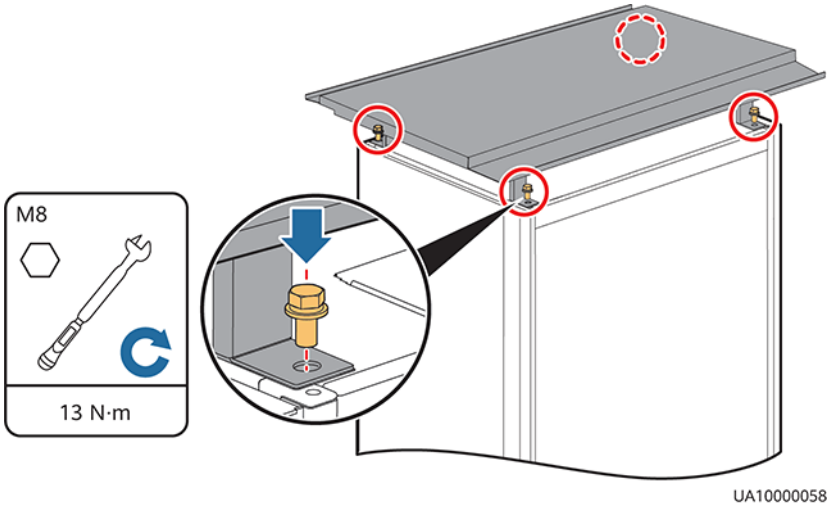

----End

3.2.4.2 Installing a 4G Module or Network Cable

To connect to the iManager-M, use either of the following methods to complete the installation.

4G Module Access Scenario

NOTICE

- The 4G module requires high communication signal strength. Before using the 4G module, survey the signal strength.
- The mobile data transmission function of the 4G module cannot be used in a shielding equipment room.

Step 1 If the 4G module does not have a built-in SIM card, remove the 4G module enclosure, install a SIM card, and reinstall the enclosure.

Figure 3-38 Installing a SIM card

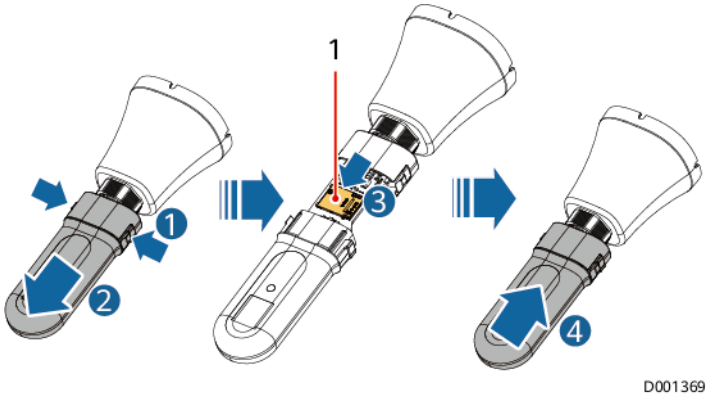

(1) SIM card installation position

Step 2 Attach the 4G module to the top of the IP21 component in the cabinet by the magnet, and connect the 4G module to the USB Host port on the MDU using a USB extension cable.

NOTICE

- Do not install the 4G module in an enclosed environment or a position subject to severe signal interference. Otherwise, the 4G module may be disconnected from the network for a short period of time.
- The figure uses top cable routing as an example. The installation positions are the same for bottom cable routing and top air-flow configuration.

Figure 3-39 Installing a 4G module

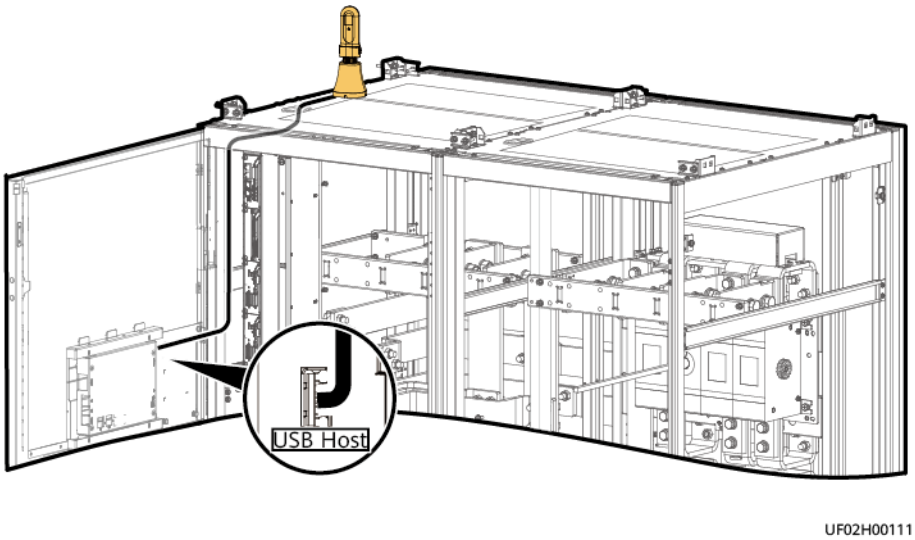

Figure 3-40 Installing a 4G module (IP21 component scenario)

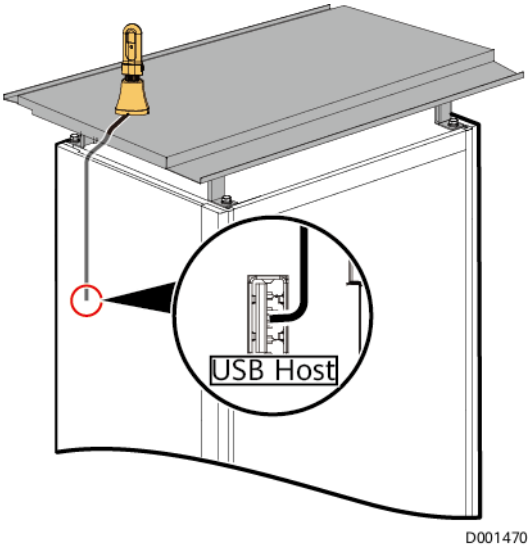

----End

FE Access Scenario

Step 1 Connect the network port on a LAN switch or router to the FE port on the monitoring interface card.

Figure 3-41 Cable routing

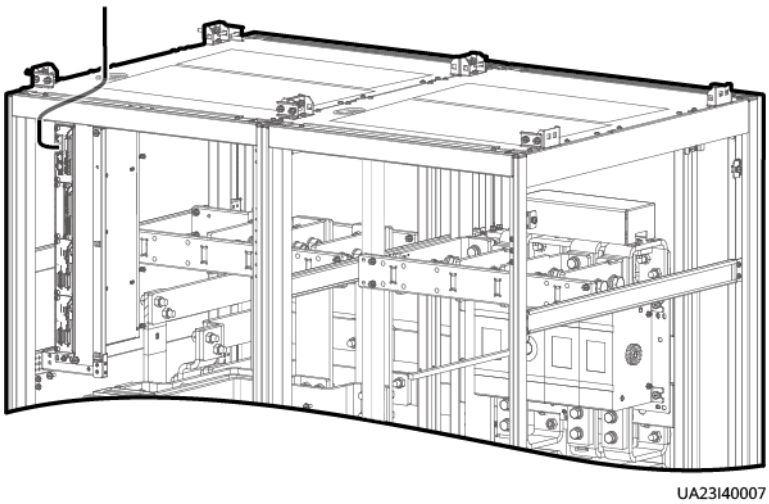

Figure 3-42 Monitoring interface card

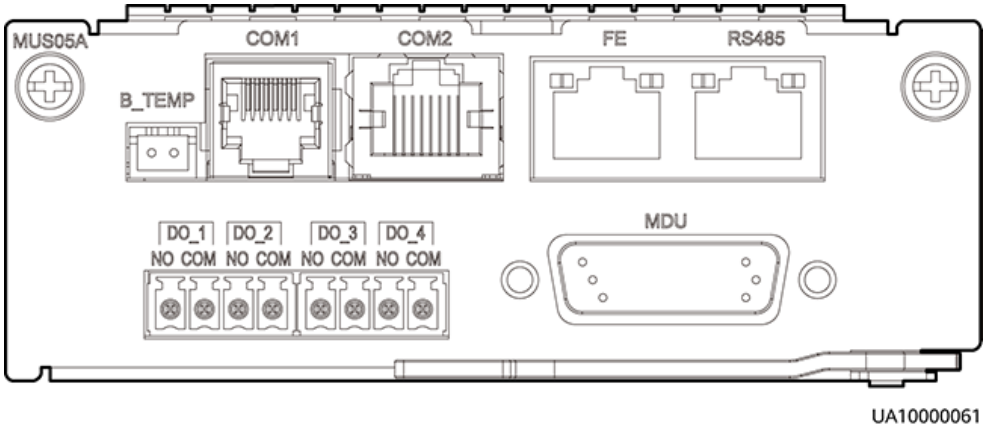

----End

3.2.4.3 Installing Ambient T/H Sensors and Cables (33010516)

Procedure

Step 1 Install an ambient T/H sensor.

NOTE

- When the ambient T/H sensor is used to monitor the ambient temperature and humidity near the UPS, secure the T/H sensor to the UPS rack or wall near the UPS.
- When the ambient T/H sensor is used to monitor the ambient temperature and humidity near batteries, secure the T/H sensor to the battery rack or wall near the battery rack.

- Magnet-based installation

  Secure the ambient T/H sensor to the rack or battery rack through the magnets of the ambient T/H sensor.

Figure 3-43 Bottom cover of the ambient T/H sensor

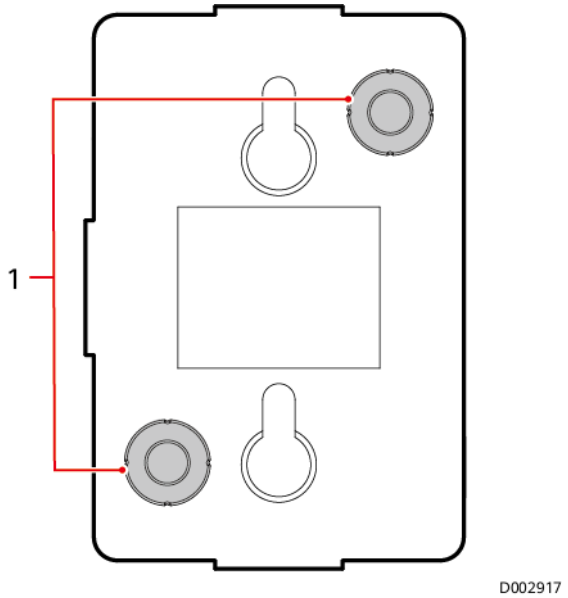

(1) Magnets

- Wall-mounted installation

WARNING

– Avoid drilling holes into the water pipes and power cables buried in the wall.
– Install the device on a flat and secure interior wall.
– You are advised to use the tapping screws and rubber plugs delivered with the device.

a. Drill holes into the wall using a hammer drill.
b. Place the rubber plug vertically into the hole and knock the rubber plug using a rubber mallet until the rubber plug is completely in the hole.
c. Insert the tapping screw vertically into the hole in the rubber plug, tighten the tapping screw, and reserve a length of 2 mm to 3 mm.
d. Ensure that the RS485-OUT port on the ambient T/H sensor faces downwards, align the holes on the bottom cover with the tapping screws, and push the ambient T/H sensor downwards until it is in position.

Figure 3-44 Wall-mounted installation

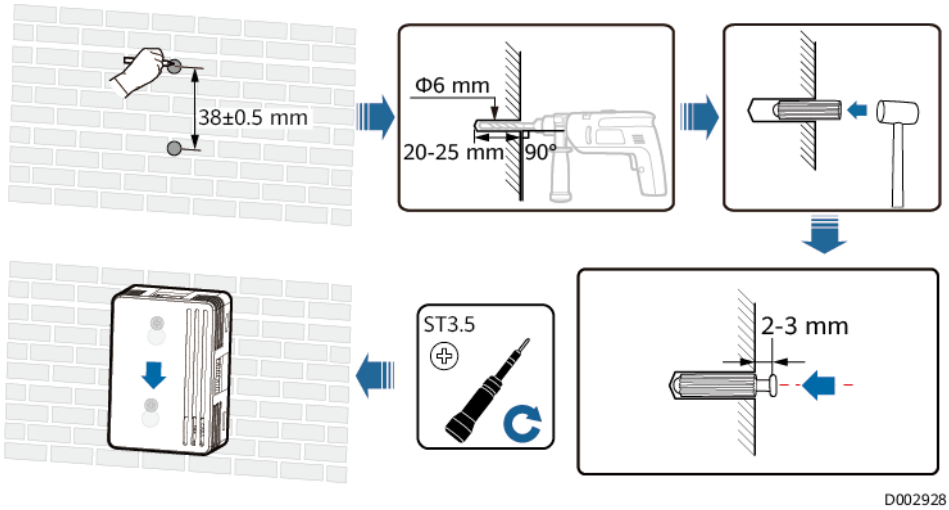

Step 2 Connect the ambient T/H sensor cable.

NOTICE

- To prevent the system from generating alarms, set the DIP switch by referring to **4.1.4.3 Setting the Ambient T/H Sensor (33010516)**.
- The UPS can connect to a maximum of 12 cascaded ambient T/H sensors.
- The COM1 port on the MUS05A monitoring interface card is an 8-pin RJ45 port or a 6-pin RJ11 port. The RS485-IN and RS485-OUT ports on the ambient T/H sensor are 8-pin RJ45 ports. Select a cable connection method based on site requirements. For details, see **Table 3-10**.

1. Connect one end of the cable to the RS485-IN port on the ambient T/H sensor and the other end to the COM1 port on the MUS05A monitoring interface card.
2. Connect one end of the cable to the RS485-OUT port on the ambient T/H sensor and the other end to the RS485-IN port on another ambient T/H sensor.

Figure 3-45 Connecting cables

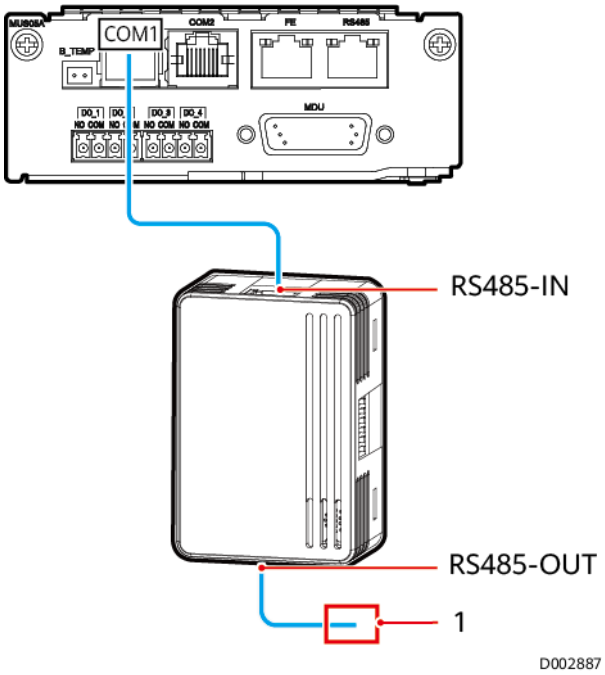

(1) Cascaded with another ambient T/H sensor

Table 3-10 Cable connections

One End	The Other End	Cable Connection
RJ45 port (8-pin)	RJ45 port (8-pin)	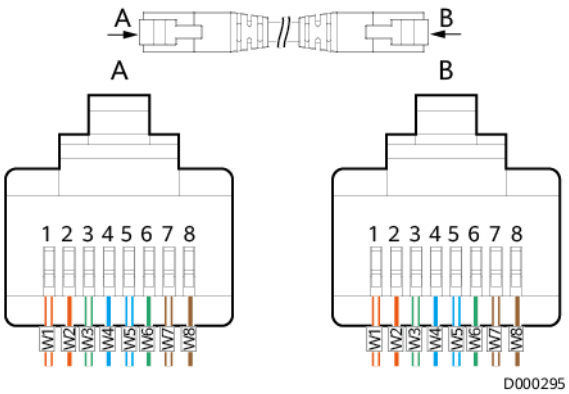
RJ11 port (6-pin)	RJ45 port (8-pin)	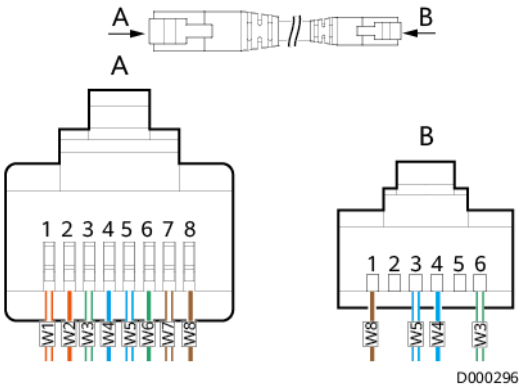

One End	The Other End	Cable Connection
– One end of the cable is connected to the COM1 port on the monitoring interface card or the RS485-OUT port on the upper-level T/H sensor. The other end of the cable is connected to the RS485-IN port on the T/H sensor. – W1: orange-white; W2: orange; W3: green-white; W4: blue; W5: blue-white; W6: green; W7: brown-white; W8: brown. The cable colors are for reference only. The actual cable colors may vary. – Before crimping a terminal, cut off the excess part of core wires.		

----End

3.2.4.4 Installing Ambient T/H Sensors and Cables (02312PBL or 02310NBS)

Procedure

Step 1 Install an ambient T/H sensor.

NOTE

- When the ambient T/H sensor is used to monitor the ambient temperature and humidity near the UPS, secure the T/H sensor to the UPS or rack near the UPS.
- When the ambient T/H sensor is used to monitor the ambient temperature and humidity near batteries, secure the T/H sensor to the battery rack or rack near the battery rack.

- Magnet-based installation (02312PBL)

  Secure the ambient T/H sensor to the rack through the magnets of the ambient T/H sensor.

- Rack-mounted installation

  a. Secure the ambient T/H sensor base to the rack.

  b. Align the mounting holes on the ambient T/H sensor with the mounting holes on the base, and push the ambient T/H sensor downwards until it is in position.

Figure 3-46 Installing an ambient T/H sensor

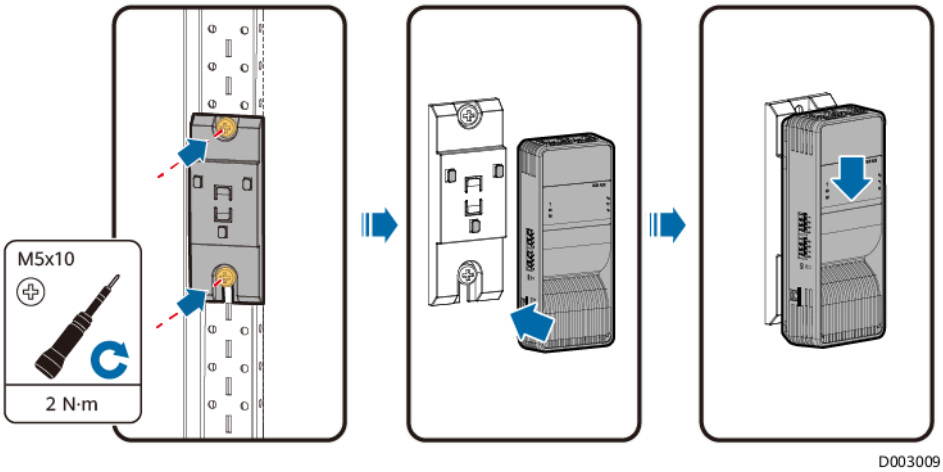

Step 2 Connect the ambient T/H sensor cable.

NOTICE

- To prevent the system from generating alarms, set the DIP switch by referring to **4.1.4.4 Setting the Ambient T/H Sensor (02312PBL or 02310NBS)**.
- The UPS can connect to a maximum of 12 cascaded ambient T/H sensors.
- The COM1 port on the MUS05A monitoring interface card is an 8-pin RJ45 port or a 6-pin RJ11 port. The RS485-IN and RS485-OUT ports on the ambient T/H sensor are 8-pin RJ45 ports or 6-pin RJ11 ports. Select a cable connection method based on site requirements. For details, see **Table 3-11**.

1. Connect one end of the cable to the RS485-IN port on the ambient T/H sensor and the other end to the COM1 port on the MUS05A monitoring interface card.
2. Connect one end of the cable to the RS485-OUT port on the ambient T/H sensor and the other end to the RS485-IN port on another ambient T/H sensor.

Figure 3-47 Connecting cables (02312PBL)

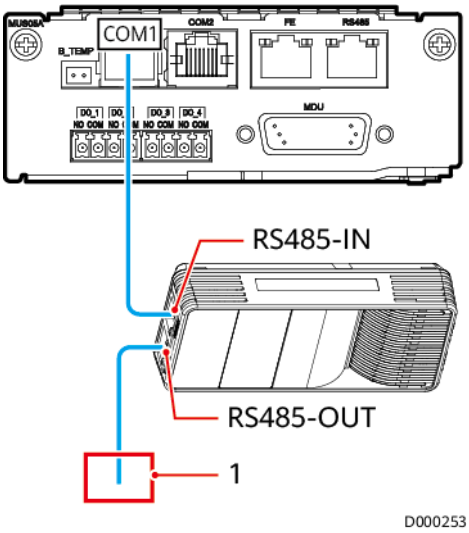

(1) Cascaded with another ambient T/H sensor

Table 3-11 Cable connections

One End	The Other End	Cable Connection
RJ45 port (8-pin)	RJ45 port (8-pin)	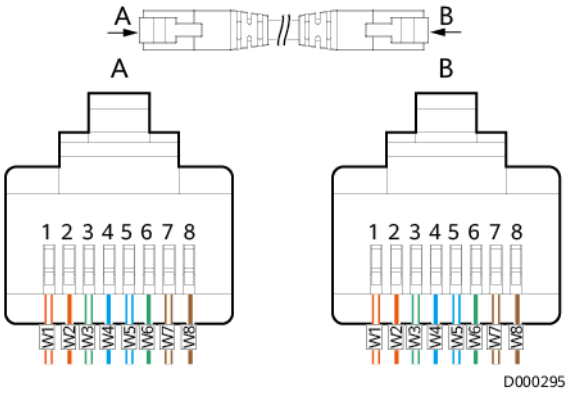
RJ45 port (8-pin)	RJ11 port (6-pin)	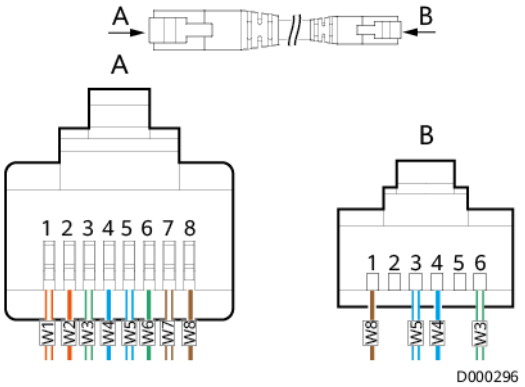
RJ11 port (6-pin)	RJ45 port (8-pin)	
RJ11 port (6-pin)	RJ11 port (6-pin)	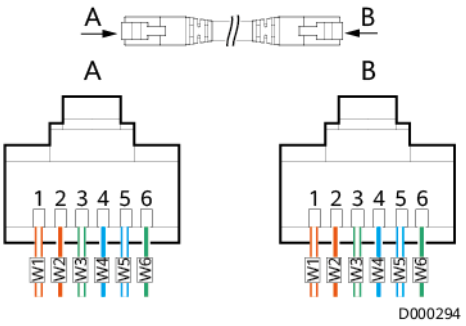

- One end of the cable is connected to the COM1 port on the monitoring interface card or the RS485-OUT port on the upper-level T/H sensor. The other end of the cable is connected to the RS485-IN port on the T/H sensor.
- W1: orange-white; W2: orange; W3: green-white; W4: blue; W5: blue-white; W6: green; W7: brown-white; W8: brown. The cable colors are for reference only. The actual cable colors may vary.
- Before crimping a terminal, cut off the excess part of core wires.

----End

3.2.4.5 Connecting the BCB Box

Open the cover of the BCB box, and connect the BCB port on the dry contact card to the control signal port on the BCB box. For details, see the *PDU8000-(0125,0250,0400,0630,0800)DCV8-BXA001 Battery Circuit Breaker Box User Manual*.

NOTICE

If a BCB box is configured, adjust the end of discharge (EOD) threshold based on the backup time. Otherwise, the BCB box will trip due to overcurrent. The default values are as follows:

1. If backup time < 1 h, EOD is 1.67 V/cell.
2. If 1 h ≤ backup time < 3 h, EOD is 1.75 V/cell.
3. If backup time ≥ 3 h, EOD is 1.80 V/cell.

3.2.4.6 Connecting the BBB Box

Connect the BBB box. For details, see the *PDU8000-(0630, 1250, 2000) DCV8-BGA001 BBB Box User Manual*.

3.2.4.7 Installing a Battery Grounding Failure Detector

Procedure

Step 1 Install a battery grounding failure detector.

For the installation method, see *UPS Battery Grounding Failure Detector User Manual*.

 Copyright © Huawei Digital Power Technologies Co., Ltd.

Figure 3-48 Position of a battery grounding failure detector in the 400 kVA, 500 kVA, or 600 kVA UPS

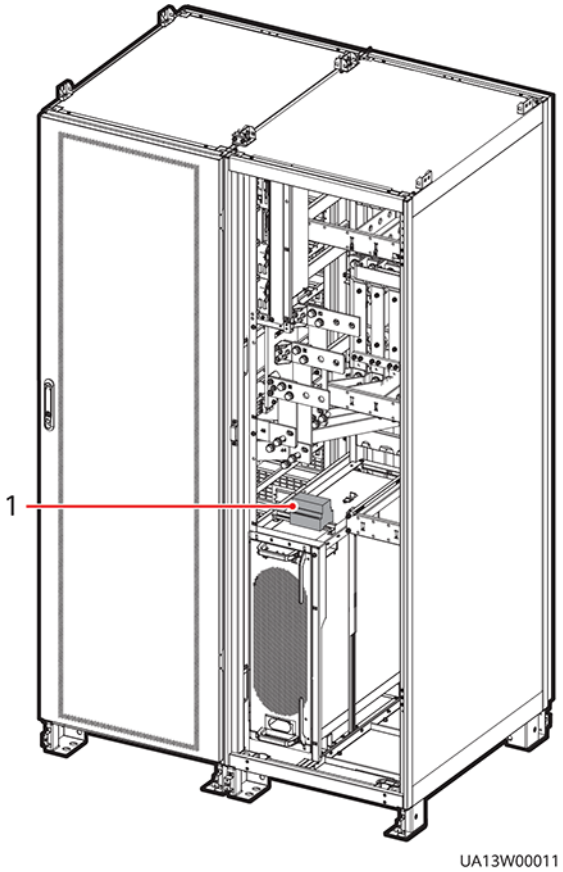

(1) Battery grounding failure detector

Figure 3-49 Position of a battery grounding failure detector in the 800 kVA UPS

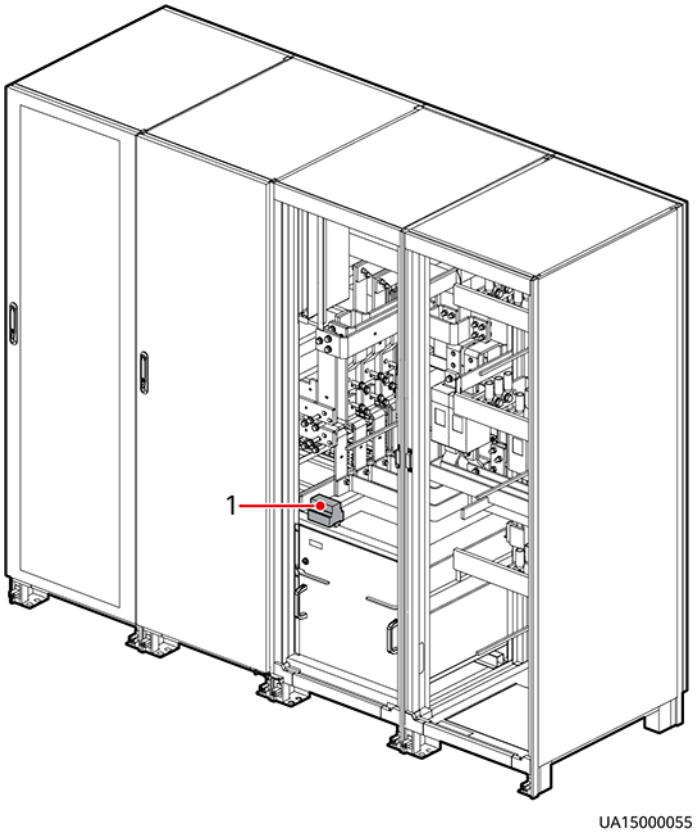

(1) Battery grounding failure detector

----End

3.2.5 Cable Routing Requirements

Context

WARNING

- Keep away from cabinets when preparing cables to prevent cable scraps from entering the cabinets. Cable scraps may cause ignition during power-on and result in personal injury and device damage.
- After installing cables, clean the cabinet top, bottom, copper bar wiring positions, and other positions. Ensure that there is no dust or scraps inside and around cabinets.
- Prepare terminals onsite. The length of the copper wire should be the same as that of the part of the terminal that covers the conductor.

NOTICE

- Ensure that the cables are protected from mechanical stress, overheating, and corrosion.
- Ensure that cables are not squeezed, torn, warped, or whitened.

Procedure

Step 1 Route a cable into the cabinet and bind it to a nearby beam.

Step 2 Pull the cable to the copper bar to which the cable is to be connected, determine the cable length, and mark the cable at the position where the cable is to be cut.

Step 3 Pull the marked cable out of the cabinet, cut the cable from the marked position, strip the cable, and crimp a terminal.

Figure 3-50 Preparing a cable terminal outside the cabinet

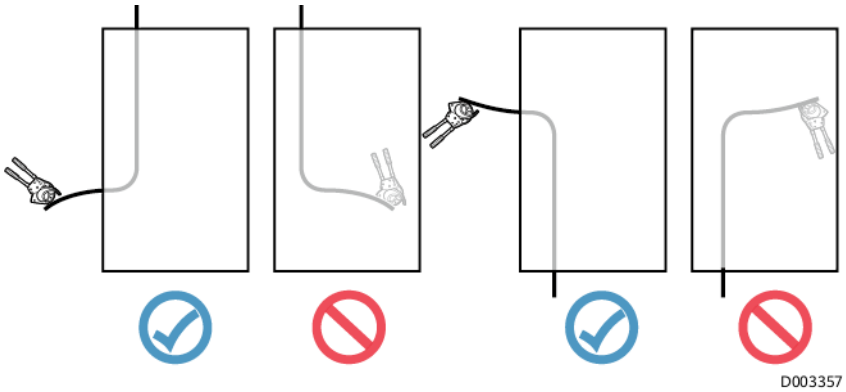

NOTE

Choose an appropriate cabling route based on the actual situation. The figure is for reference only.

Step 4 Connect the cable with a crimped terminal to the corresponding copper bar.

Step 5 Clean foreign matter inside the cabinet.

----End

3.2.6 Routing Cables (400 kVA, 500 kVA, or 600 kVA UPS)

NOTICE

- If cables need to be routed through holes, remove cable covers for power cables from the bypass cabinet and drill holes in the covers. After drilling holes, attach grommet strips on the hole edges for protecting cables. Reinstall the covers on the cabinet.
- This section describes cable connections when the mains input and bypass input use different power sources. When they use the same power source, there is no need to remove the copper bars between the mains and bypass input terminals or connect the bypass input power cables.
- Determine the cable cross-sectional area and quantity based on the section "Preparing Power Cables" and site requirements. The figures are for reference only.
- Cables are connected in the same way for the 400 kVA, 500 kVA, and 600 kVA UPS. This section describes how to connect cables for the 400 kVA UPS. For the 400 kVA cabinet, use M16x50 bolts to connect output, mains input, bypass input, and battery input cables. For the 500 kVA and 600 kVA cabinets, use M16x55 bolts to connect output, mains input, bypass input, and battery input cables. Use M12x35 bolts to connect PE cables.

 Copyright © Huawei Digital Power Technologies Co., Ltd.

3.2.6.1 Top Cable Routing

Context

Figure 3-51 Power distribution module (400 kVA UPS, 500 kVA UPS)

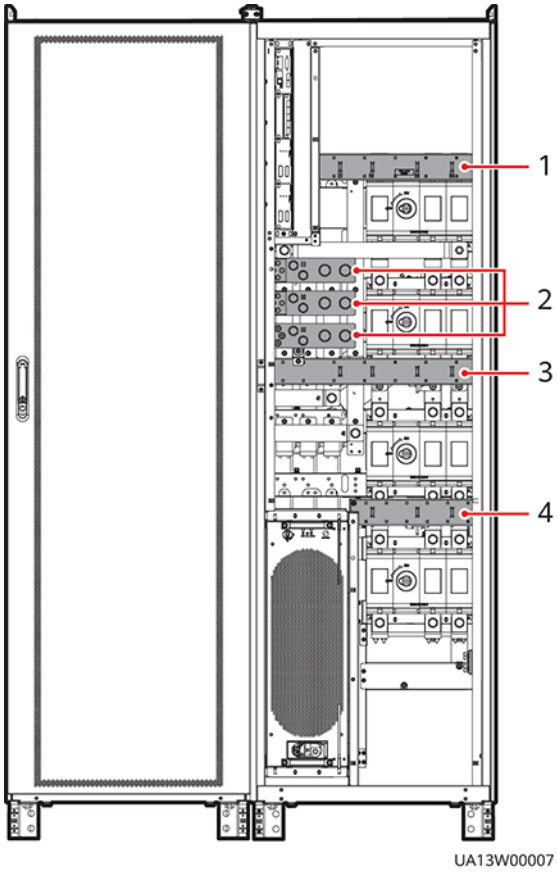

(1) Mains input terminal
(2) Battery input terminal
(3) Output terminal
(4) Bypass input terminal

Figure 3-52 Power distribution module (600 kVA UPS)

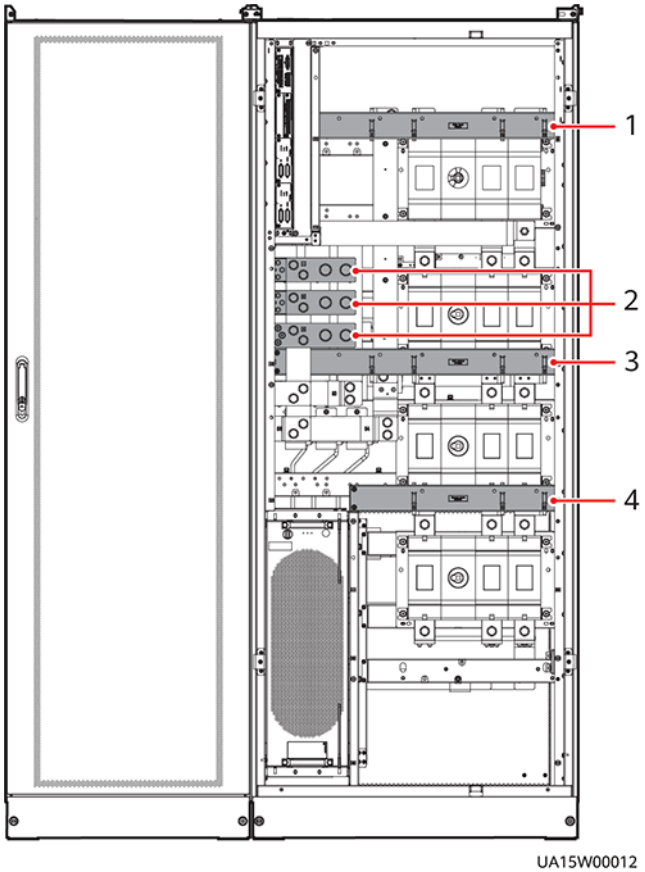

(1) Mains input terminal (2) Battery input terminal (3) Output terminal (4) Bypass input terminal

Procedure

Step 1 Open the front door of the bypass cabinet and remove the covers of the power distribution subrack.

Figure 3-53 Removing the covers of the power distribution subrack

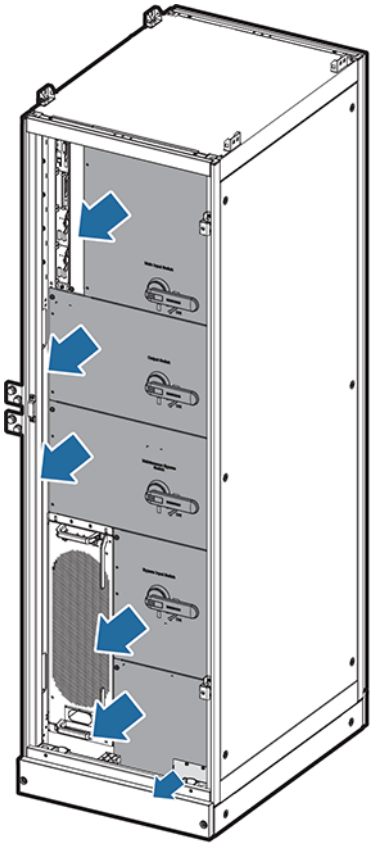

UA13H00002

Step 2 Remove the covers from the top of the cabinet.

Figure 3-54 Removing the top cable covers

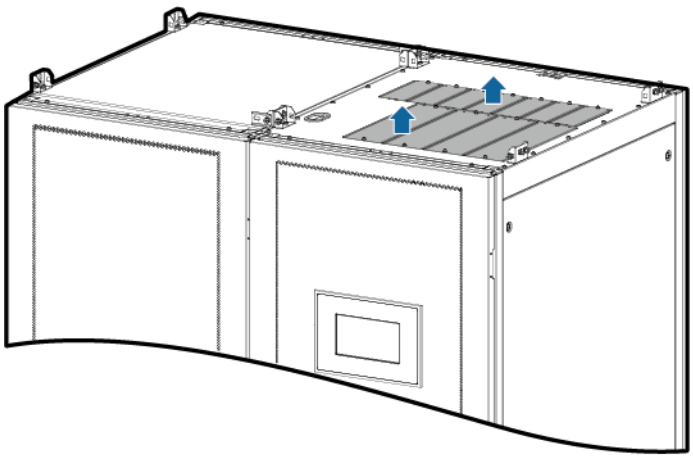

UA13H00012

Step 3 Remove the rear cover from the bypass cabinet.

NOTE

You are advised to remove the side panel from the bypass cabinet before connecting cables.

Step 4 Remove the copper bars between the mains and bypass input wiring terminals. (Perform this step only when the mains input and bypass input use different power sources.)

NOTE

- Properly keep the removed copper bars and bolts.
- (Optional) If copper bar protective covers are installed for the bypass cabinet, remove the protective covers and then the connecting copper bars. The protective covers need to be reinstalled after the connecting copper bars are removed.

Figure 3-55 Removing the copper bar protective covers at the rear

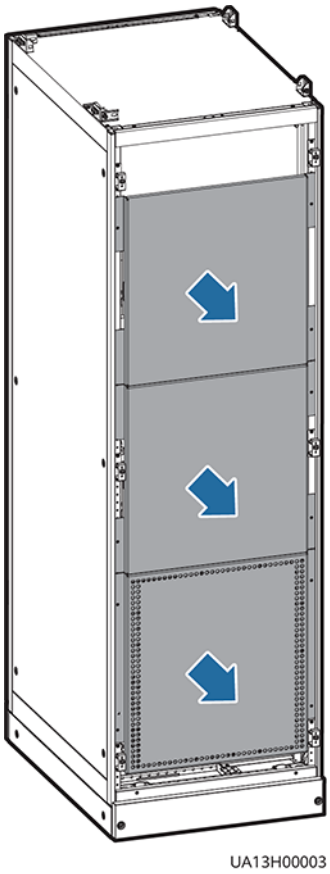

Figure 3-56 Removing the connecting copper bars

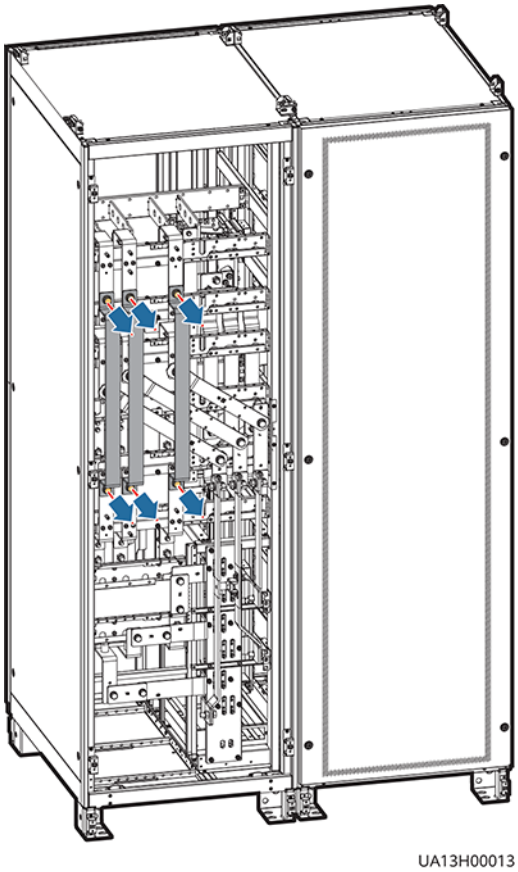

Step 5 Connect a ground cable to the UPS.

CAUTION

If you do not ground the UPS as required, electromagnetic interference, electric shocks, or fire may occur.

NOTICE

- Connect cables from top to bottom in this sequence: mains input power cables, output power cables, bypass input power cables, and battery input cables.
- Cables of the same group, for example, mains input cables (1L1, 1L2, 1L3, and N), must be routed through the same cable hole.
- When connecting cables, tighten bolts from inside out to secure cables.
- Before connecting cables, ensure that all UPS input breakers are turned off. Paste warning labels to prevent others from operating the breakers.
- Connect input power cables to the UPS and then to customer equipment.

Figure 3-57 Grounding

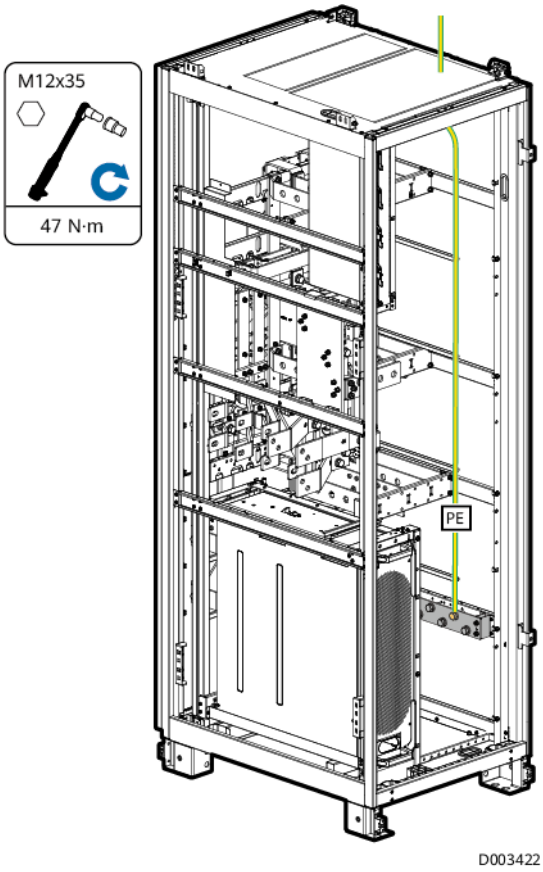

Step 6 Connect the mains input power cables.

Figure 3-58 Connecting the mains input power cables

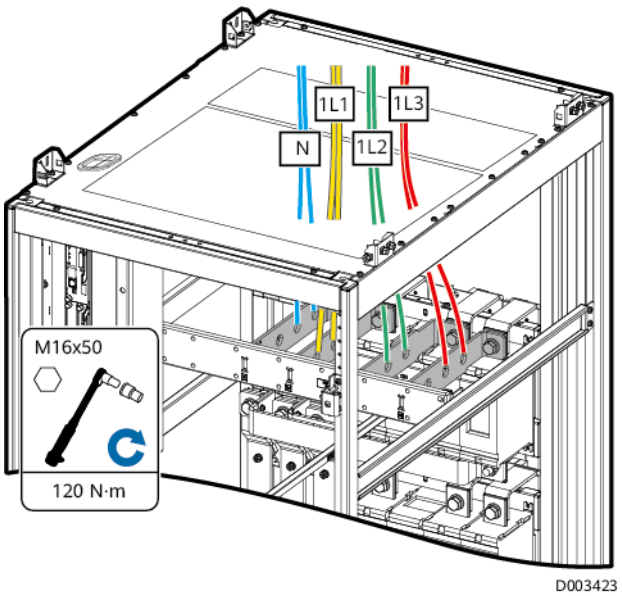

Step 7 Connect the output power cables.

CAUTION

After connecting the output power cables, if loads are not ready to be powered, insulate the terminals of the output power cables.

Figure 3-59 Connecting AC output power cables

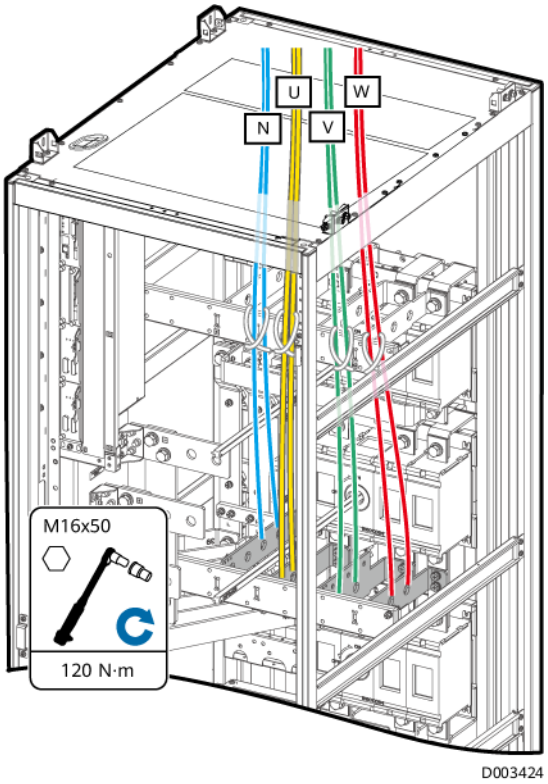

Step 8 Connect the bypass input power cables. (Perform this step only when the mains input and bypass input use different power sources.)

Figure 3-60 Connecting the bypass input power cables

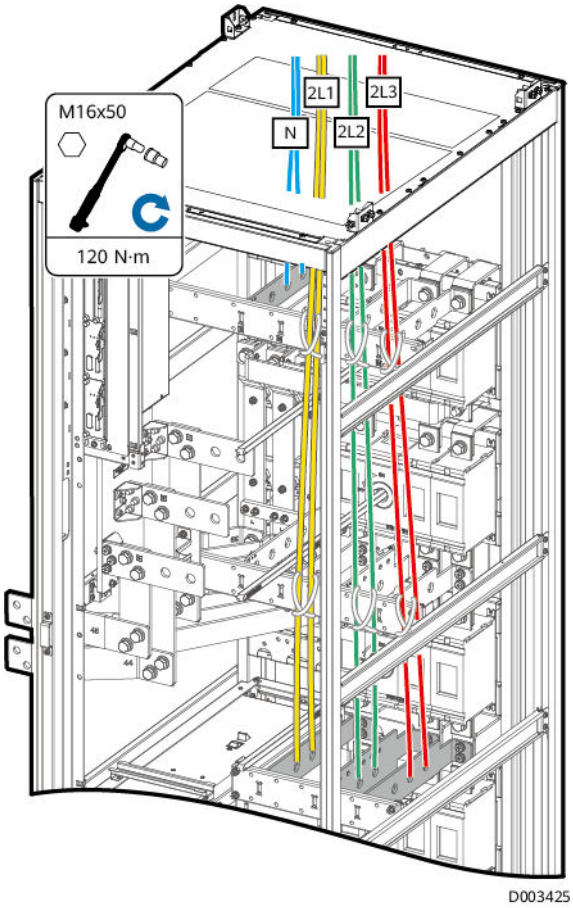

Step 9 Connect the battery cables.

DANGER

- The battery voltage may result in serious injury. Observe safety precautions when connecting cables.
- Ensure that cables are correctly connected between battery strings and the battery breaker, and between the battery breaker and the UPS. Avoid inverse connections.

Figure 3-61 Connecting battery cables

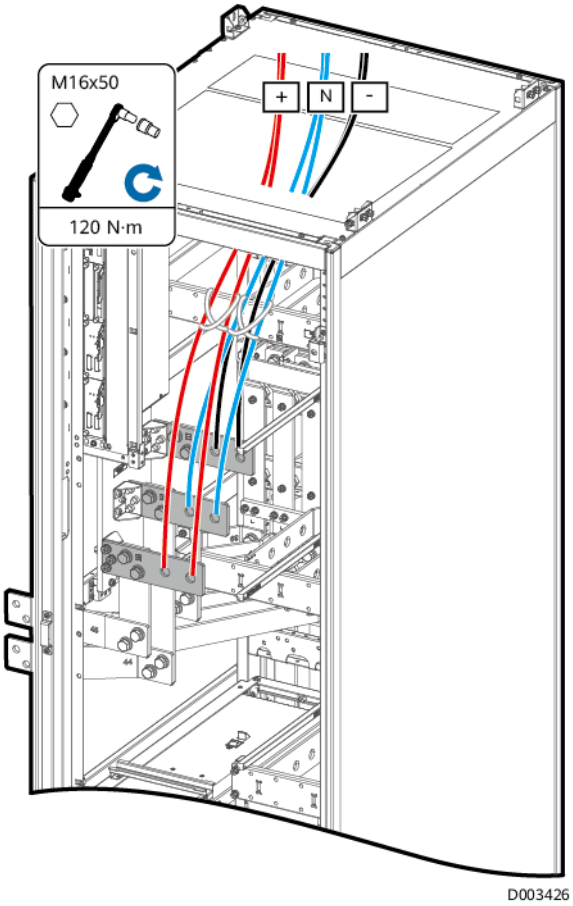

Route a neutral wire from the middle of the positive and negative battery strings.

Take a battery string consisting of 40 batteries for example. The battery neutral wire is routed from the middle of positive and negative battery strings, each consisting of 20 batteries, as shown in **Figure 3-62**.

Figure 3-62 Neutral wire

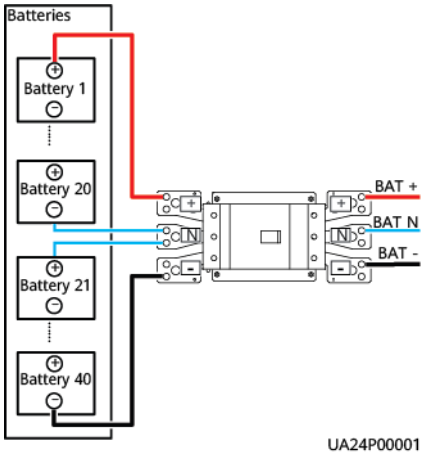

Step 10 Route signal cables. **Figure 3-63** shows the signal cables routed from the top of the cabinet.

NOTICE

Bind signal cables and power cables separately.

Figure 3-63 Routing signal cables from the top of the cabinet

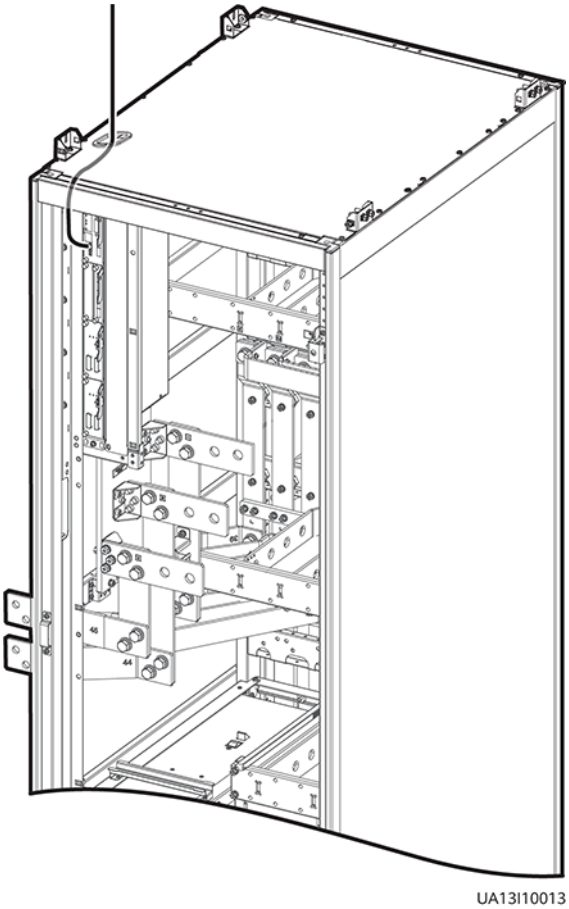

NOTE

The number and colors of signal cables in **Figure 3-63** are for reference only.

----End

Follow-up Procedure

- After connecting cables, reinstall the covers of the power distribution subrack, rear panel, and side panel of the bypass cabinet.
- After connecting cables, check that a certain clearance is reserved between the internal breaker (if any) extension pole and power cables to avoid friction.

3.2.6.2 Bottom Cable Routing

Procedure

Step 1 Open the front door of the bypass cabinet and remove the covers of the power distribution subrack.

Step 2 Remove the cable covers from the bottom of the cabinet, drill holes in the covers, attach grommet strips to the hole edges for protecting cables, and reinstall the cable covers.

NOTE

The hole size and quantity are for reference only.

Figure 3-64 Removing the bottom cable covers and drilling holes

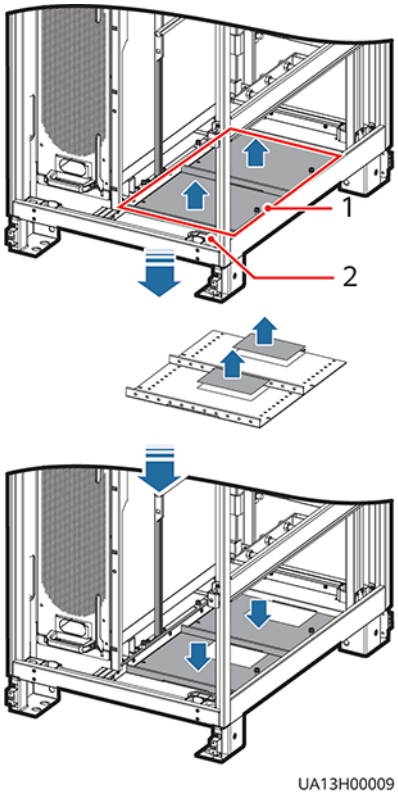

(1) Power cable covers (2) Signal cable hole

Step 3 Remove the rear cover from the bypass cabinet.

NOTE

You are advised to remove the side panel from the bypass cabinet before connecting cables.

Step 4 Remove the copper bars between the mains and bypass input wiring terminals. (Perform this step only when the mains input and bypass input use different power sources.)

NOTE

- Properly keep the removed copper bars and bolts.
- (Optional) If copper bar protective covers are installed for the bypass cabinet, remove the protective covers and then the connecting copper bars. The protective covers need to be reinstalled after the connecting copper bars are removed.

Step 5 Connect a ground cable to the UPS.

CAUTION

If you do not ground the UPS as required, electromagnetic interference, electric shocks, or fire may occur.

NOTICE

- Connect cables from bottom up in this sequence: bypass input power cables, output power cables, mains input power cables, and battery input power cables.
- Cables of the same group, for example, mains input cables (1L1, 1L2, 1L3, and N), must be routed through the same cable hole.
- When connecting cables, tighten bolts from inside out to secure cables.
- Before connecting cables, ensure that all UPS input breakers are turned off. Paste warning labels to prevent others from operating the breakers.
- Connect the input power cables to the UPS before connecting power cables to customer equipment.

Figure 3-65 Grounding

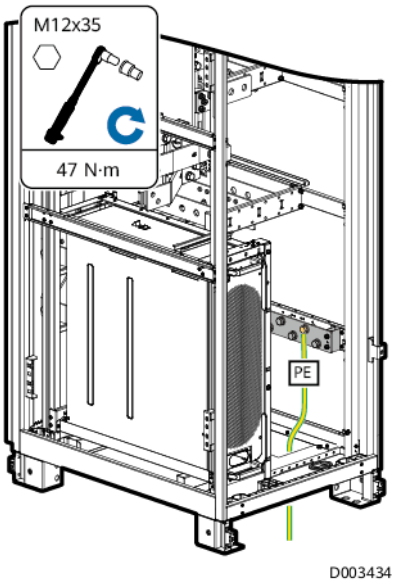

Step 6 Connect the bypass input power cables. (Perform this step only when the mains input and bypass input use different power sources.)

Figure 3-66 Connecting the bypass input power cables

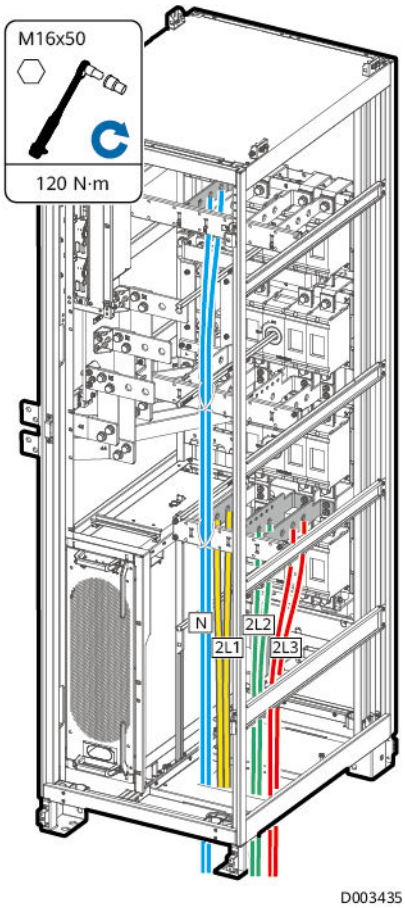

Step 7 Connect the output power cables.

CAUTION

After connecting the output power cables, if loads are not ready to be powered, insulate the terminals of the output power cables.

Figure 3-67 Connecting output power cables

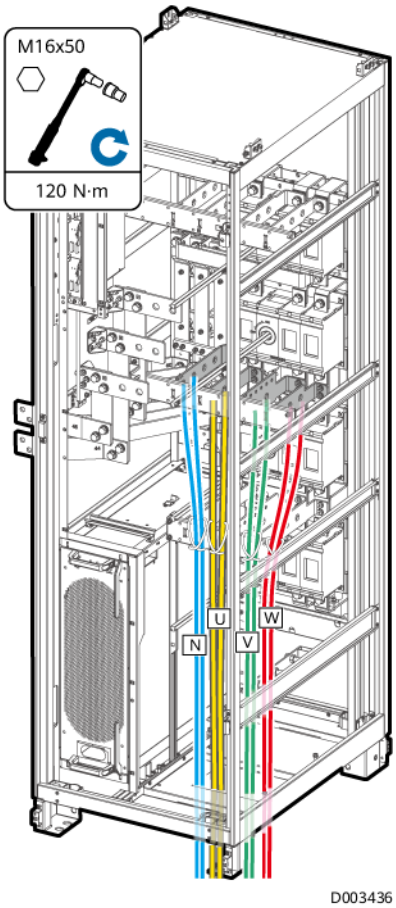

Figure 3-68 Connecting output power cables

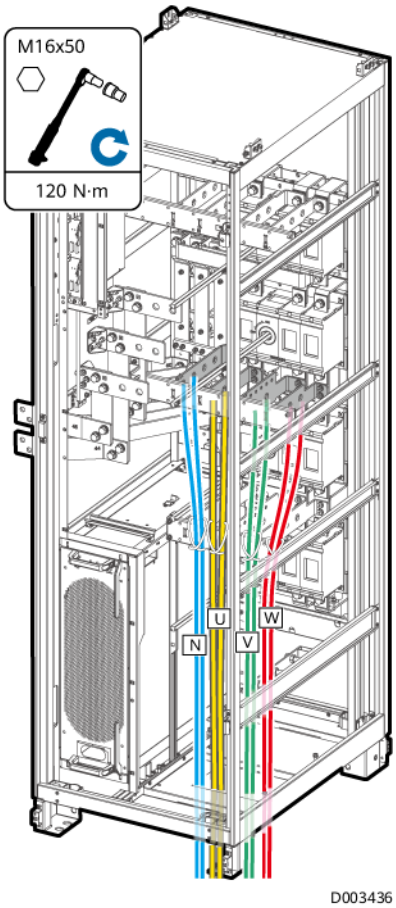

Step 8 Connect the mains input power cables.

Figure 3-69 Connecting the mains input power cables

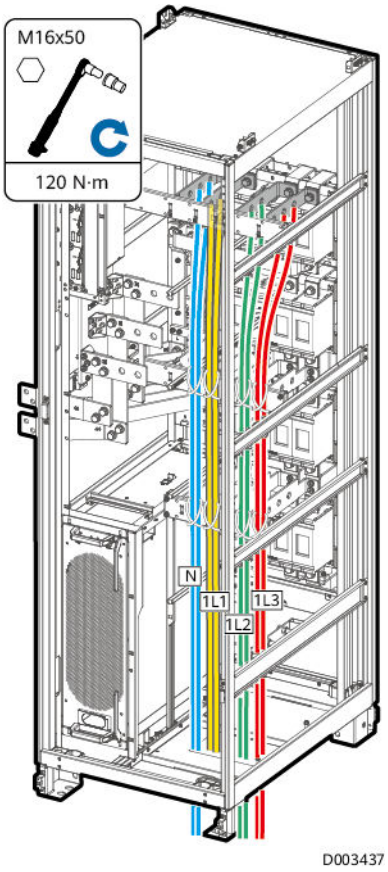

Step 9 Connect the battery cables.

DANGER

- The battery voltage may result in serious injury. Observe safety precautions when connecting cables.
- Ensure that cables are correctly connected between battery strings and the battery breaker, and between the battery breaker and the UPS. Avoid inverse connections.

Figure 3-70 Connecting battery cables

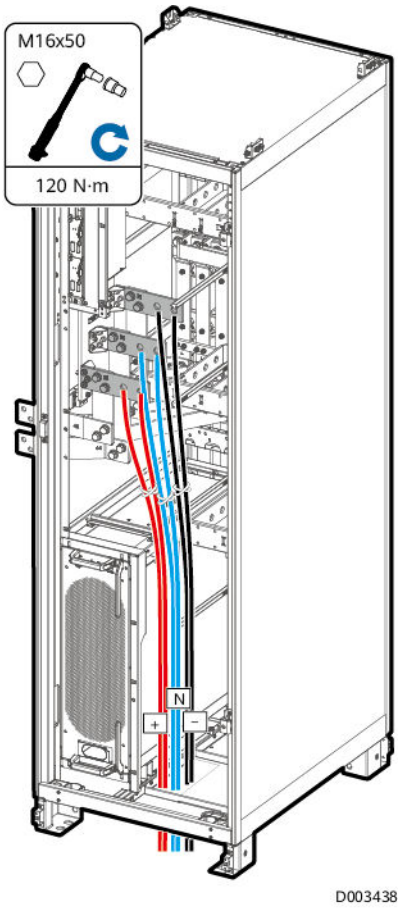

Route a neutral wire from the middle of the positive and negative battery strings.

Take a battery string consisting of 40 batteries for example. The battery neutral wire is routed from the middle of positive and negative battery strings, each consisting of 20 batteries.

Figure 3-71 Neutral wire

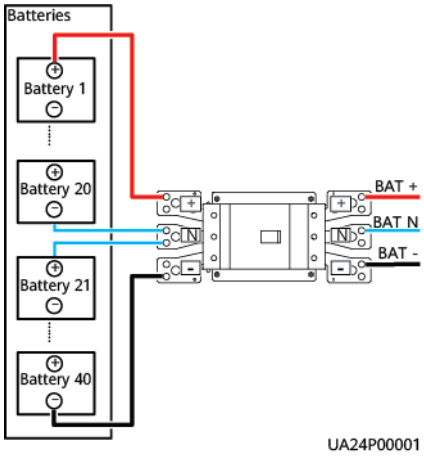

Step 10 Route signal cables. Bind cables to the cabinet. **Figure 3-72** shows the signal cables routed from the bottom of the cabinet.

Figure 3-72 Signal cables routed from the bottom

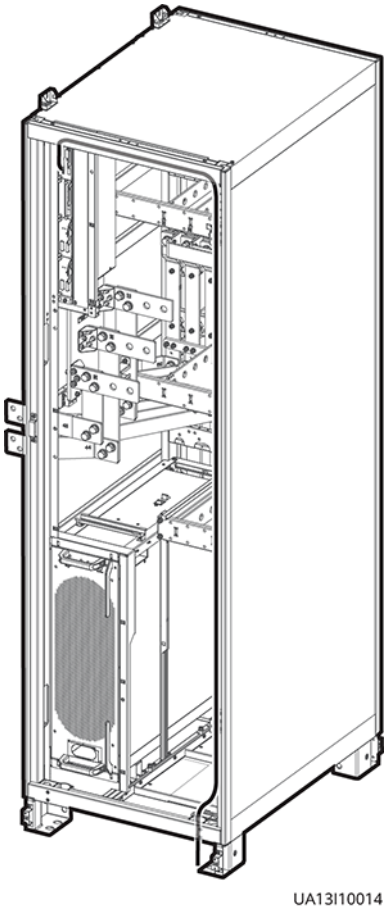

NOTE

The number and colors of signal cables in **Figure 3-72** are for reference only.

----End

Follow-up Procedure

- After connecting cables, reinstall the covers of the power distribution subrack, rear panel, and side panel of the bypass cabinet.
- After connecting cables, check that a certain clearance is reserved between the internal breaker (if any) extension pole and power cables to avoid friction.

3.2.7 Routing Cables (800 kVA UPS)

NOTICE

- This section describes cable connections when the mains input and bypass input use different power sources. When they use the same power source, there is no need to remove the copper bars between the mains and bypass input terminals or connect the bypass input power cables.
- Determine the cable cross-sectional area and quantity based on the section "Preparing Power Cables" and site requirements. The figures are for reference only.

3.2.7.1 Top Cable Routing

Context

NOTICE

- Route cables for the UPS from inside out and from top down.
- Cables of the same group, for example, mains input cables (1L1, 1L2, 1L3, and N), must be routed through the same cable hole.

Figure 3-73 Power distribution module

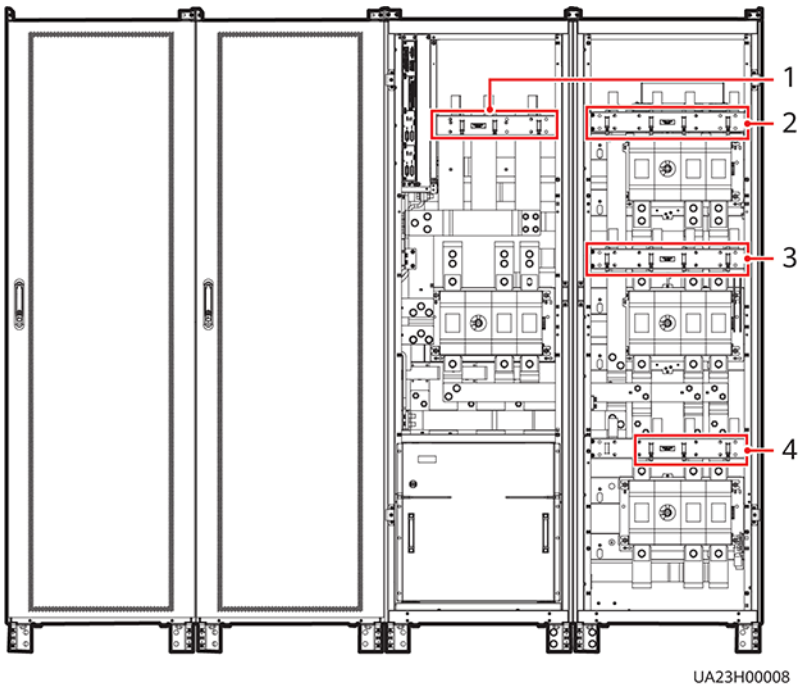

(1) Battery input terminal (2) Mains input terminal (3) Output terminal (4) Bypass input terminal

Procedure

Step 1 Open the front door of the bypass cabinet and remove the covers of the power distribution subrack.

Step 2 Remove the cable covers from the top of the cabinet.

Figure 3-74 Removing the top cable covers

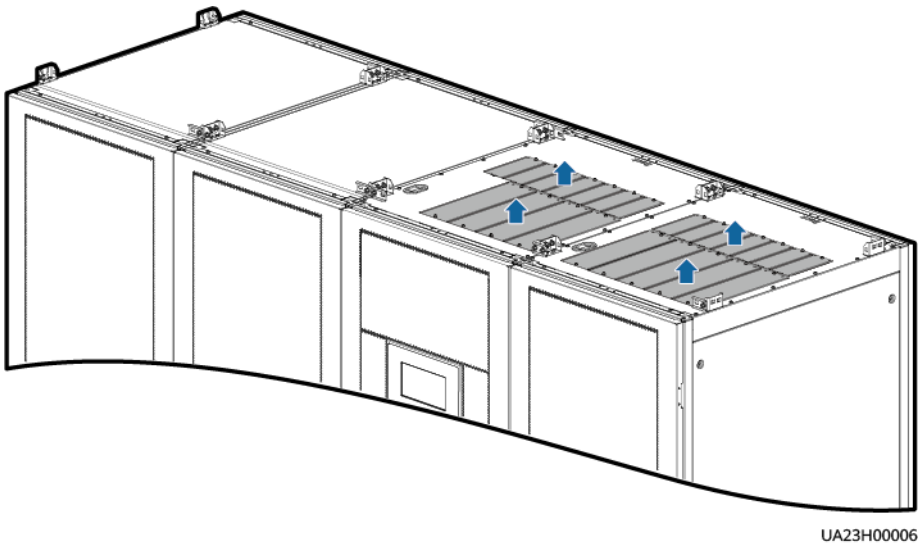

Step 3 Remove the rear cover from the bypass cabinet.

NOTE

You are advised to remove the side panel from the bypass cabinet before connecting cables.

Step 4 Remove the copper bars between the mains and bypass inputs. (Perform this step only when the mains input and bypass input use different power sources.)

NOTE

- Properly keep the removed copper bars and bolts.
- (Optional) If copper bar protective covers are installed for the bypass cabinet, remove the protective covers and then the connecting copper bars. The protective covers need to be reinstalled after the connecting copper bars are removed.

Figure 3-75 Removing the connecting copper bars

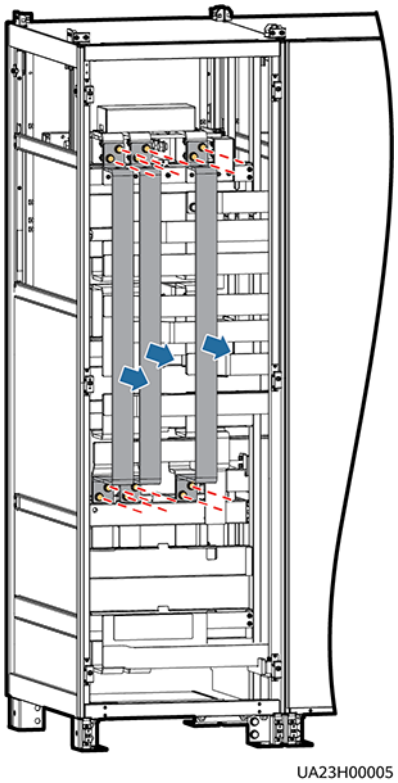

Step 5 Connect a ground cable to the UPS.

NOTICE

- Before connecting cables, ensure that all UPS input breakers are turned off. Paste warning labels to prevent others from operating the breakers.
- Connect the input power cables to the UPS before connecting power cables to customer equipment.

Figure 3-76 Grounding

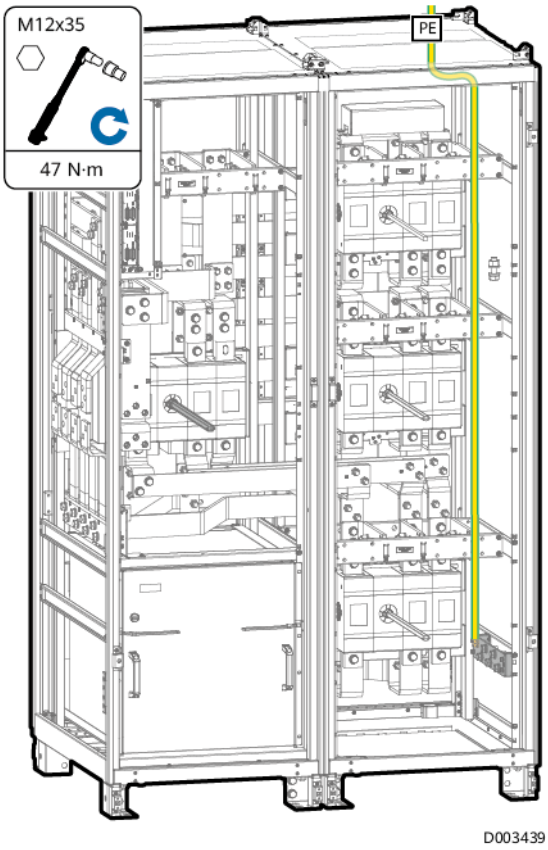

Step 6 Connect the mains input power cables.

Figure 3-77 Connecting mains input power cables

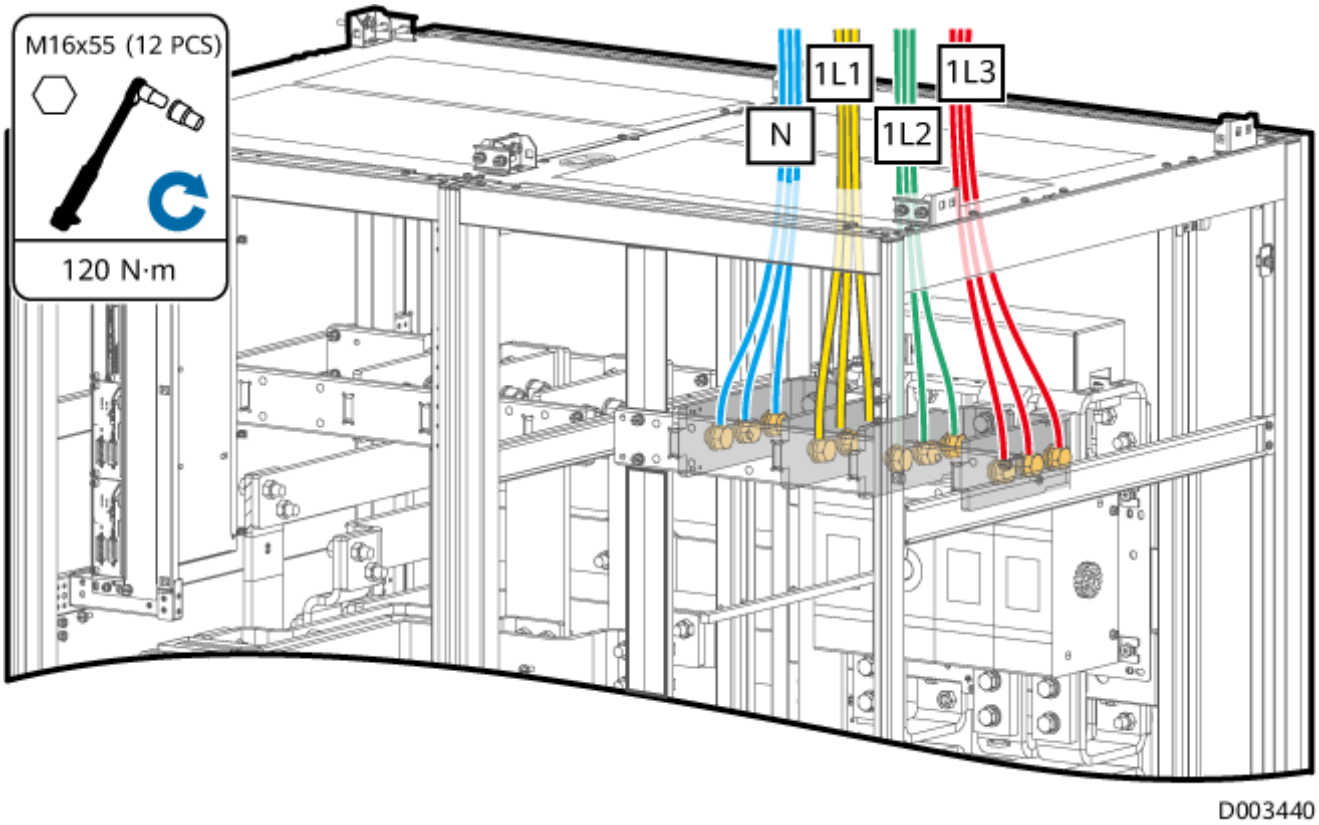

Step 7 Connect the output power cables.

CAUTION

After connecting the output power cables, if loads are not ready to be powered, insulate the terminals of the output power cables.

Figure 3-78 Connecting AC output power cables

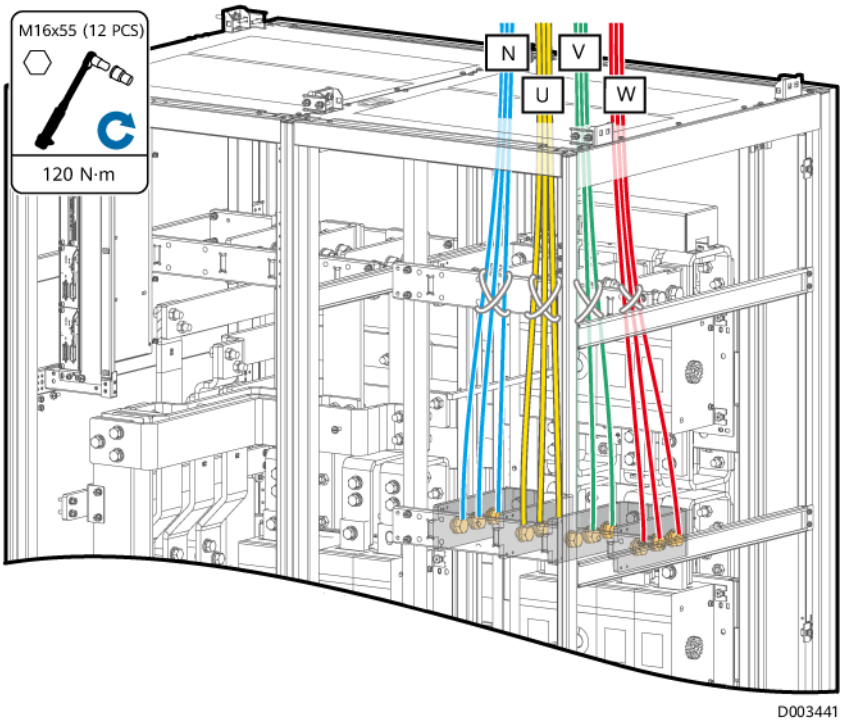

Step 8 Connect the bypass input power cables. (Perform this step only when the mains input and bypass input use different power sources.)

Figure 3-79 Connecting the bypass input power cables

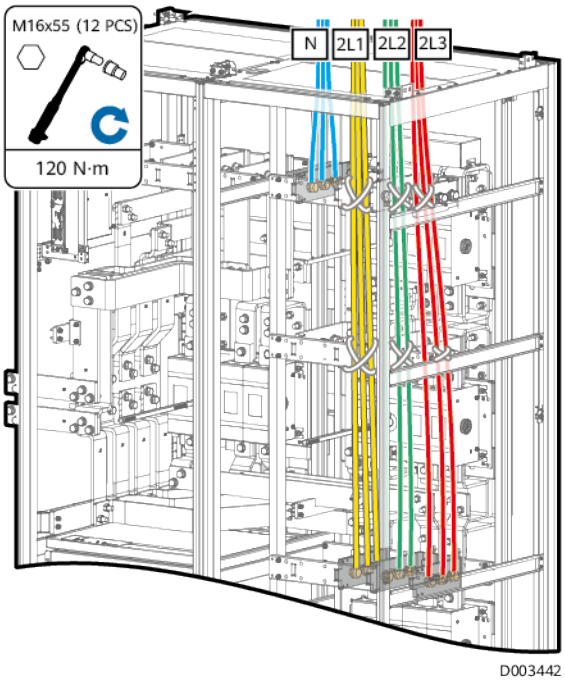

Step 9 Connect the battery cables.

DANGER

- The battery voltage may result in serious injury. Observe safety precautions when connecting cables.
- Ensure that cables are correctly connected between battery strings and the battery breaker, and between the battery breaker and the UPS. Avoid inverse connections.

Figure 3-80 Connecting battery cables

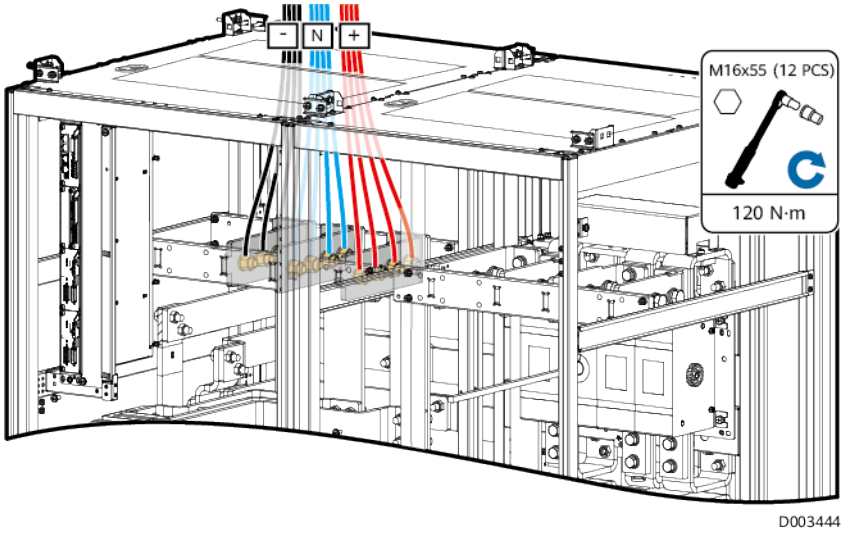

Route a neutral wire from the middle of the positive and negative battery strings.

Take a battery string consisting of 40 batteries for example. The battery neutral wire is routed from the middle of positive and negative battery strings, each consisting of 20 batteries.

Figure 3-81 Neutral wire

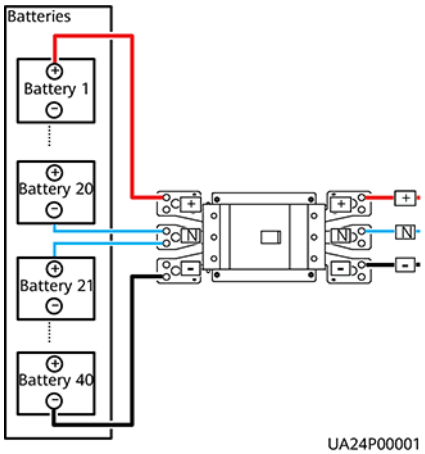

Step 10 Route signal cables. Bind cables to the cabinet. **Figure 3-82** shows the signal cables routed from the top of the cabinet.

NOTICE

Do not bind signal cables and power cables together.

Figure 3-82 Routing signal cables from the top of the cabinet

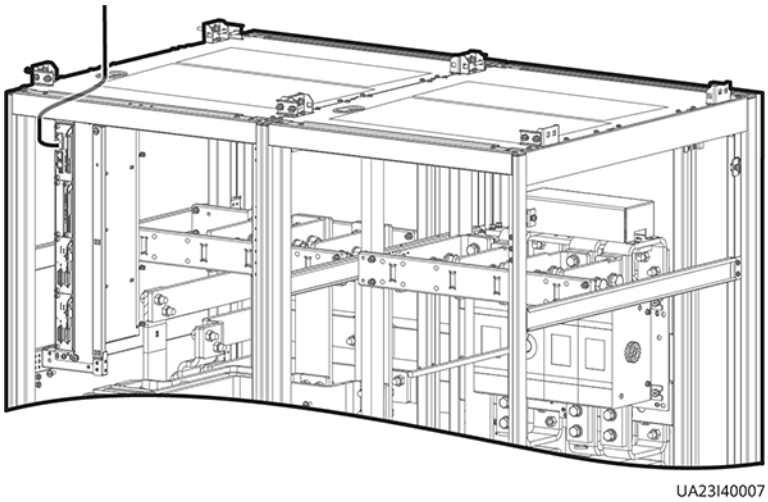

NOTE

The number and colors of signal cables in **Figure 3-82** are for reference only.

----End

Follow-up Procedure

- After connecting cables, reinstall the covers of the power distribution subrack, rear panel, and side panel of the bypass cabinet.
- After connecting cables, check that a certain clearance is reserved between the internal breaker (if any) extension pole and power cables to avoid friction.

3.2.7.2 Bottom Cable Routing

Context

NOTICE

- Route cables for the UPS from inside out and from bottom up.
- Cables of the same group, for example, mains input cables (1L1, 1L2, 1L3, and N), must be routed through the same cable hole.

Procedure

Step 1 Open the front door of the bypass cabinet and remove the covers of the power distribution subrack.

Step 2 Remove the cable covers from the bottom of the cabinet, drill holes in the covers, attach grommet strips to the hole edges for protecting cables, and reinstall the cable covers.

NOTE

The hole size and quantity are for reference only.

Figure 3-83 Removing the bottom cable covers and drilling holes

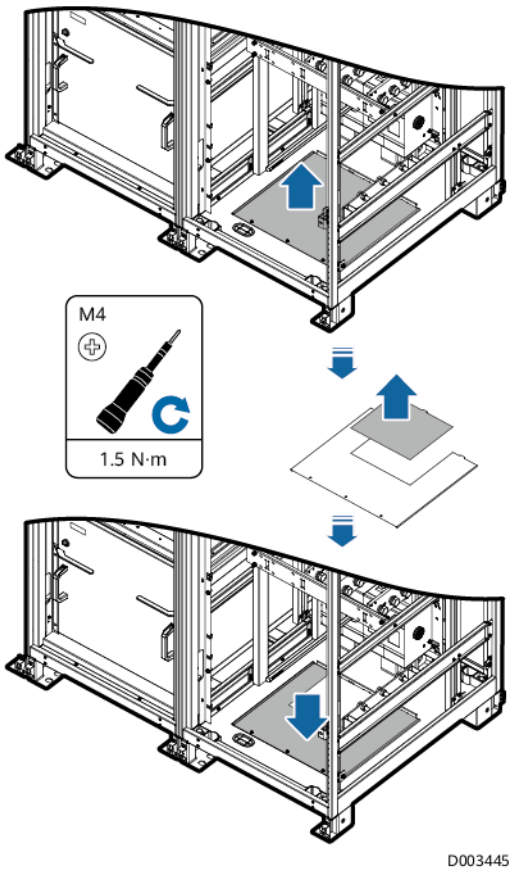

Step 3 Remove the rear cover from the bypass cabinet.

NOTE

You are advised to remove the side panel from the bypass cabinet before connecting cables.

Step 4 Remove the copper bars between the mains and bypass input wiring terminals. (Perform this step only when the mains input and bypass input use different power sources.)

NOTE

- Properly keep the removed copper bars and bolts.
- (Optional) If copper bar protective covers are installed for the bypass cabinet, remove the protective covers and then the connecting copper bars. The protective covers need to be reinstalled after the connecting copper bars are removed.

Step 5 Connect a ground cable to the UPS.

CAUTION

If you do not ground the UPS as required, electromagnetic interference, electric shocks, or fire may occur.

NOTICE

- Before connecting cables, ensure that all UPS input breakers are turned off. Paste warning labels to prevent others from operating the breakers.
- Connect the input power cables to the UPS before connecting power cables to customer equipment.

Figure 3-84 Grounding

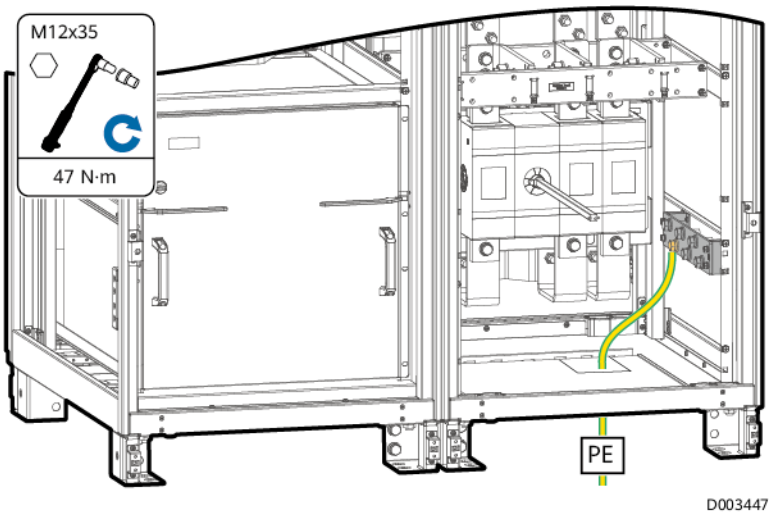

Step 6 Connect the bypass input power cables. (Perform this step only when the mains input and bypass input use different power sources.)

Figure 3-85 Connecting bypass input power cables

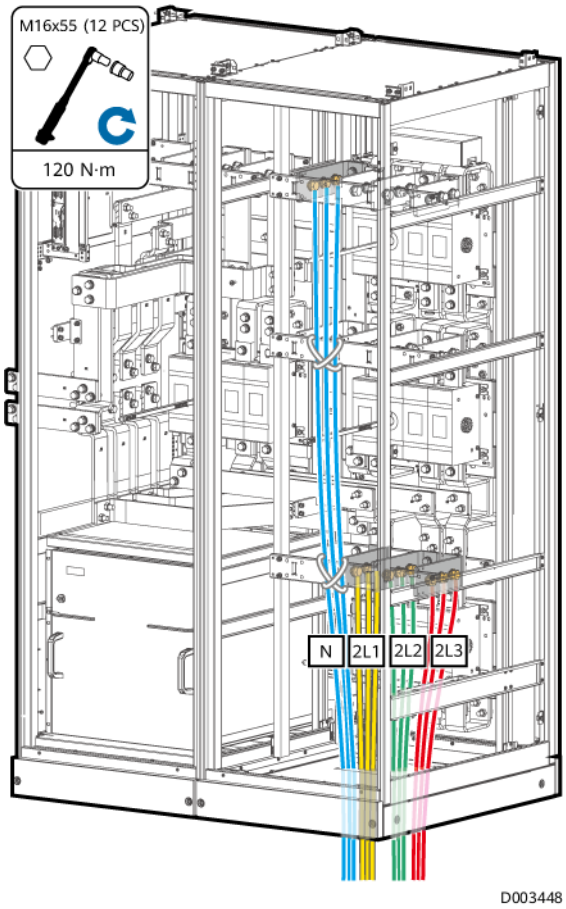

Step 7 Connect the output power cables.

CAUTION

After connecting the output power cables, if loads are not ready to be powered, insulate the terminals of the output power cables.

Figure 3-86 Connecting output power cables

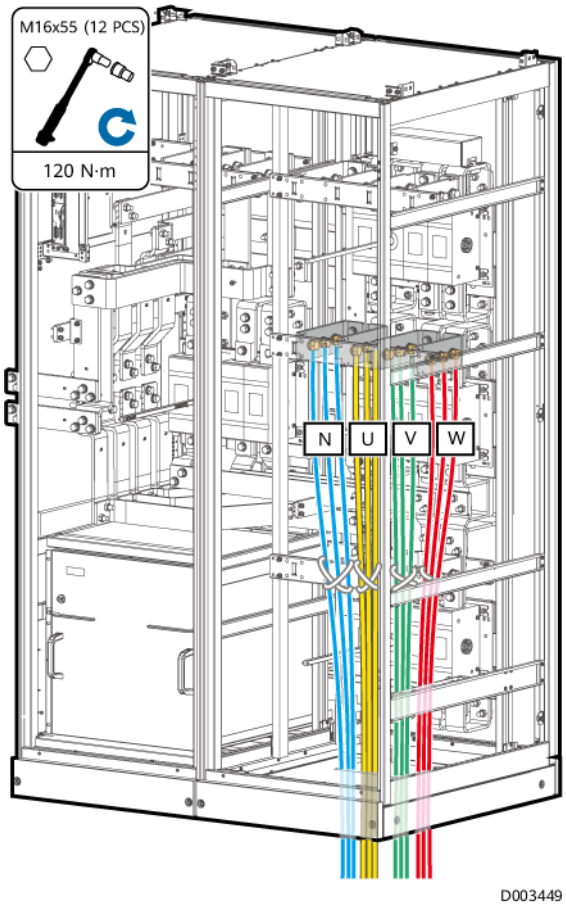

Step 8 Connect the mains input power cables.

Figure 3-87 Connecting mains input power cables

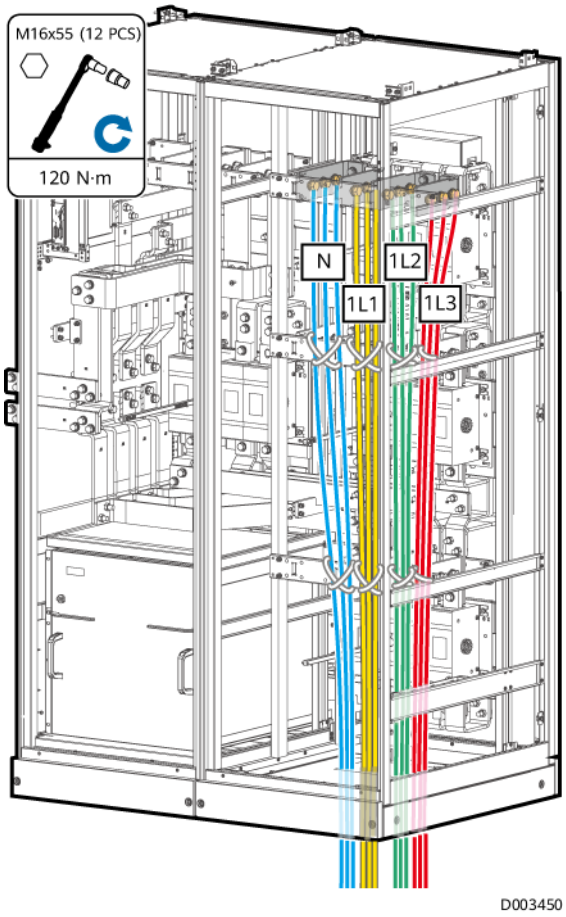

Step 9 Connect the battery cables.

DANGER

- The battery voltage may result in serious injury. Observe safety precautions when connecting cables.
- Ensure that cables are correctly connected between battery strings and the battery breaker, and between the battery breaker and the UPS. Avoid inverse connections.

Figure 3-88 Connecting the battery cables

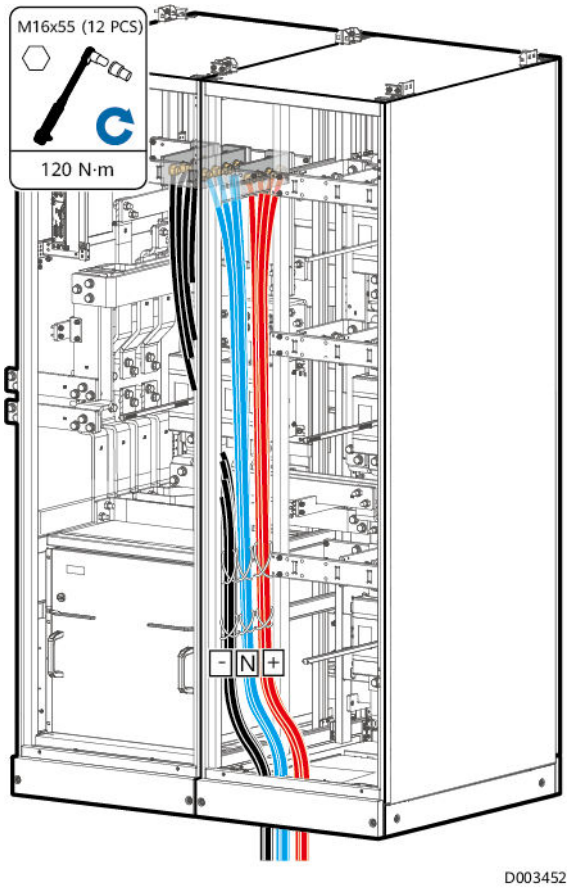

Route a neutral wire from the middle of the positive and negative battery strings.

Take a battery string consisting of 40 batteries for example. The battery neutral wire is routed from the middle of positive and negative battery strings, each consisting of 20 batteries.

Figure 3-89 Neutral wire

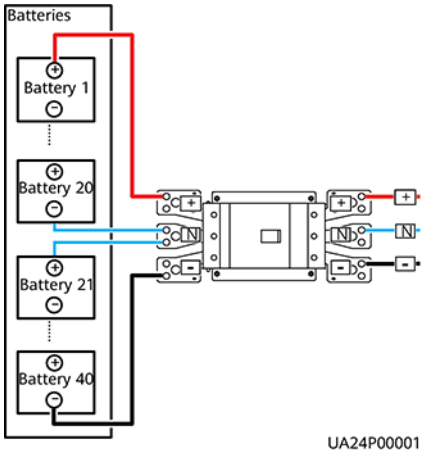

Step 10 Route signal cables. Bind cables to the cabinet. **Figure 3-90** shows the signal cables routed from the bottom of the cabinet.

NOTICE

Do not bind signal cables and power cables together.

Figure 3-90 Signal cables routed from the bottom

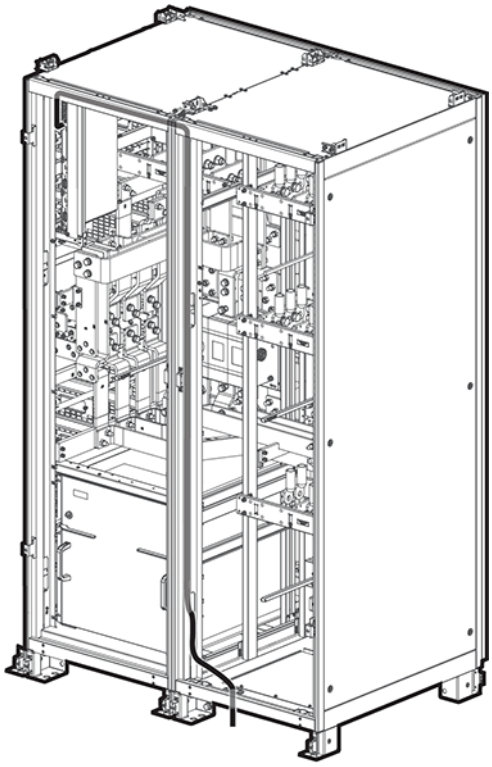

----End

Follow-up Procedure

- After connecting cables, reinstall the covers of the power distribution subrack, rear panel, and side panel of the bypass cabinet.
- After connecting cables, check that a certain clearance is reserved between the internal breaker (if any) extension pole and power cables to avoid friction.

3.2.8 Connecting a Remote EPO Switch

NOTICE

- The Company does not provide the EPO switch or cable. Prepare them by yourself. The recommended cable size is 22 AWG.
- Equip the EPO switch with a protective cover to prevent misoperations, and cover the cable with protective tubing.
- Triggering EPO will shut down the rectifier, inverter, charger, and static bypass, but does not disconnect the UPS mains input. To power off the UPS completely, open the front-end input switch when triggering EPO.
- Set remote EPO for the SmartLi system separately. The SmartLi system shall not share switch contacts with other devices such as the UPS.

Connect the requisite EPO switch to UPS dry contacts.

- **Figure 3-91** shows the cable connections for an NC EPO switch.
- **Figure 3-92** shows the cable connections for an NO EPO switch.

Figure 3-91 Cable connection for an NC EPO switch

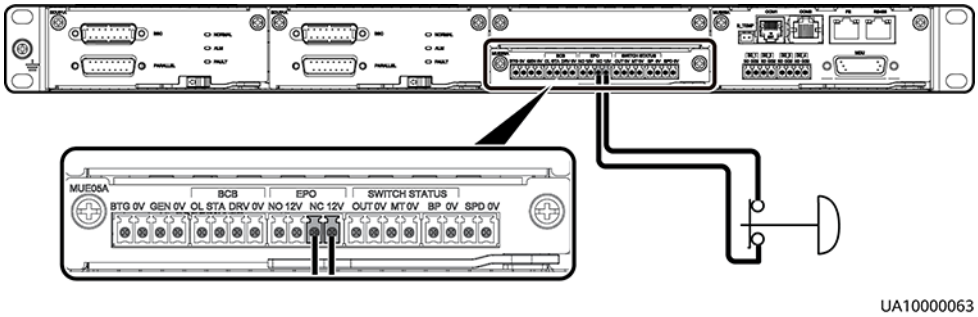

Figure 3-92 Cable connection for an NO EPO switch

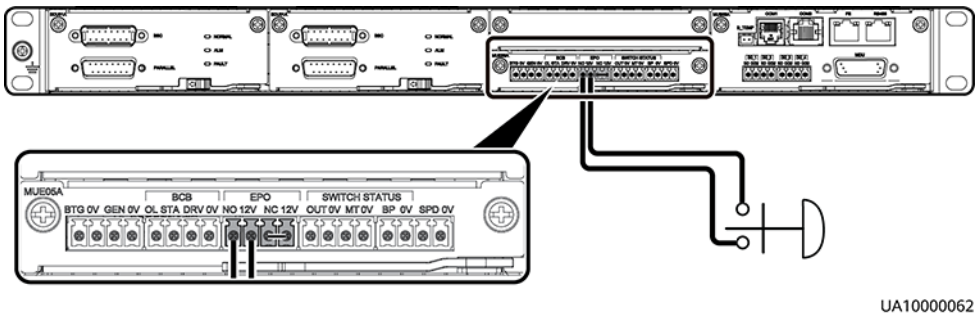

NOTE

- When you use the NC status, remove the jumper between EPO_NC and EPO_12V first. When you turn off the EPO switch, EPO is triggered.
- When you use the NO status, ensure that the jumper is connected between EPO_NC and EPO_12V. When you turn on the EPO switch, EPO is triggered.

3.2.9 Connecting Communications Cables

Procedure

Step 1 Connect the external network management device to the RS485 port of the monitoring interface card.

Step 2 Connect the network port on a PC to the FE port of the monitoring interface card.

----End

3.3 Installing a Parallel System

3.3.1 Connecting Power Cables

Context

NOTE

Power cables are connected in the same way for the 400 kVA, 500 kVA, and 600 kVA UPSs. This section describes how to connect power cables for the 400 kVA UPS.

Procedure

Step 1 Ground each UPS in a parallel system separately, and connect power cables and battery cables by referring to **3.2.6 Routing Cables (400 kVA, 500 kVA, or 600 kVA UPS)** and **3.2.7 Routing Cables (800 kVA UPS)**.

Step 2 Choose a parallel mode and connect cables to the parallel system based on site requirements.

Figure 3-93, **Figure 3-94**, and **Figure 3-95** show the typical conceptual diagram and cable connections for a 1+1 parallel system.

 Copyright © Huawei Digital Power Technologies Co., Ltd.

Figure 3-93 Conceptual diagram of a 1+1 parallel system

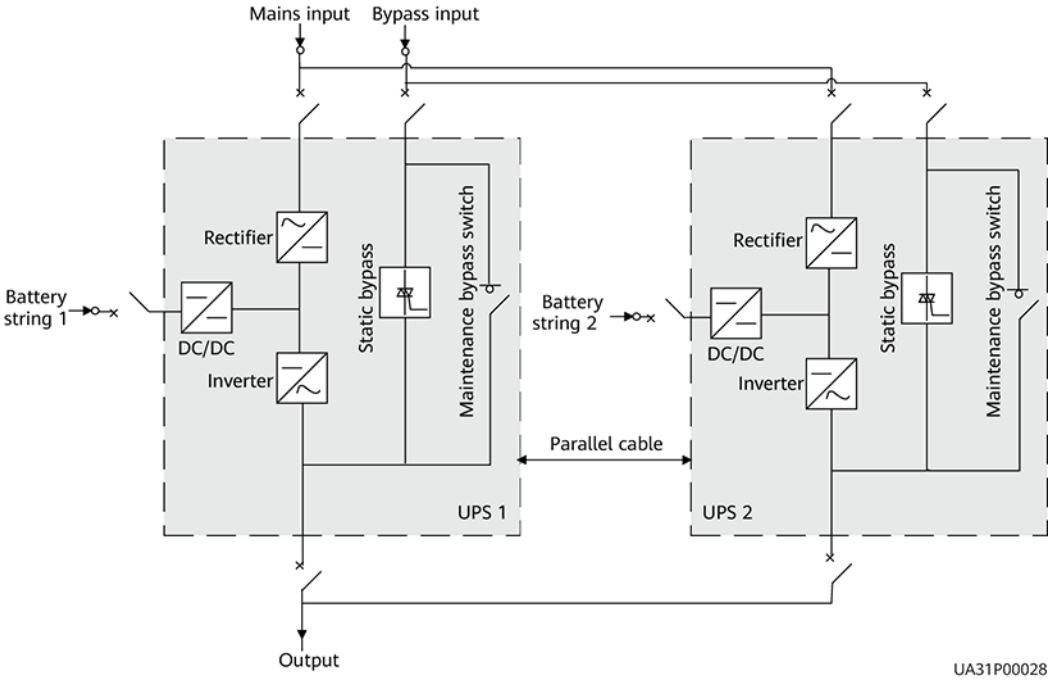

NOTICE

Connect power cables according to port silk screen.

Figure 3-94 Cable connections for a 1+1 parallel system (400 kVA UPS)

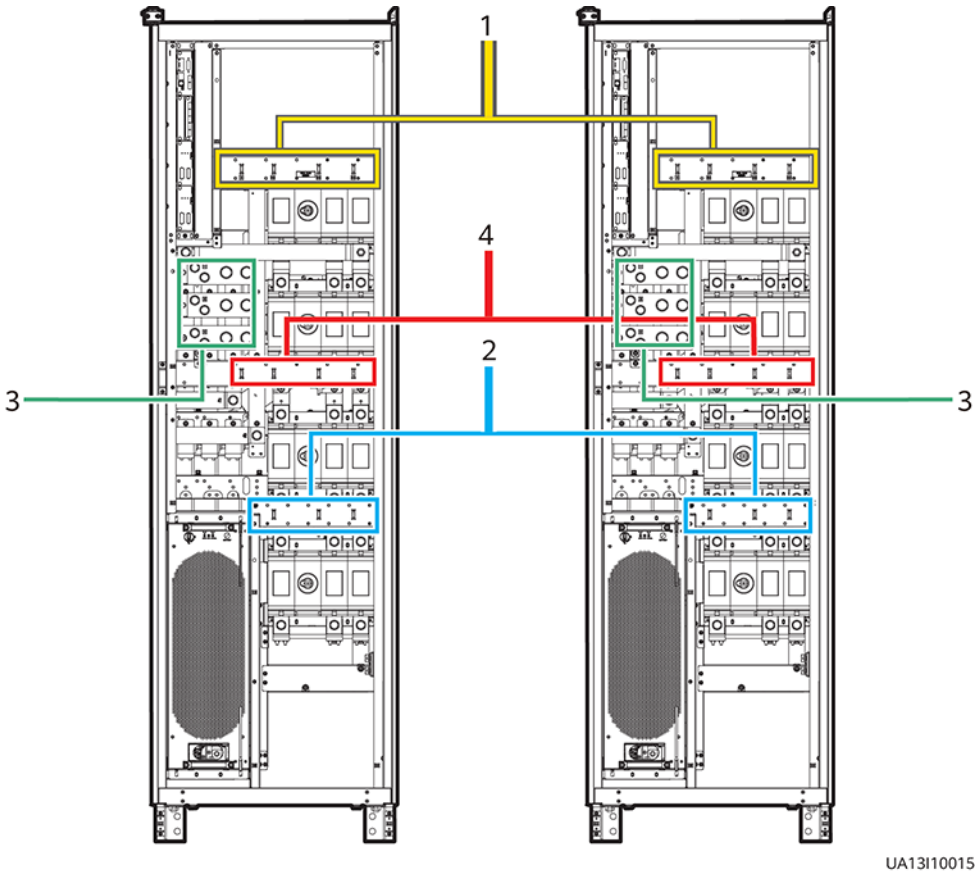

(1) Mains input power cables (2) Bypass input power cables (3) Battery cables (4) Output power cables

Figure 3-95 Cable connections for a 1+1 parallel system (800 kVA UPS)

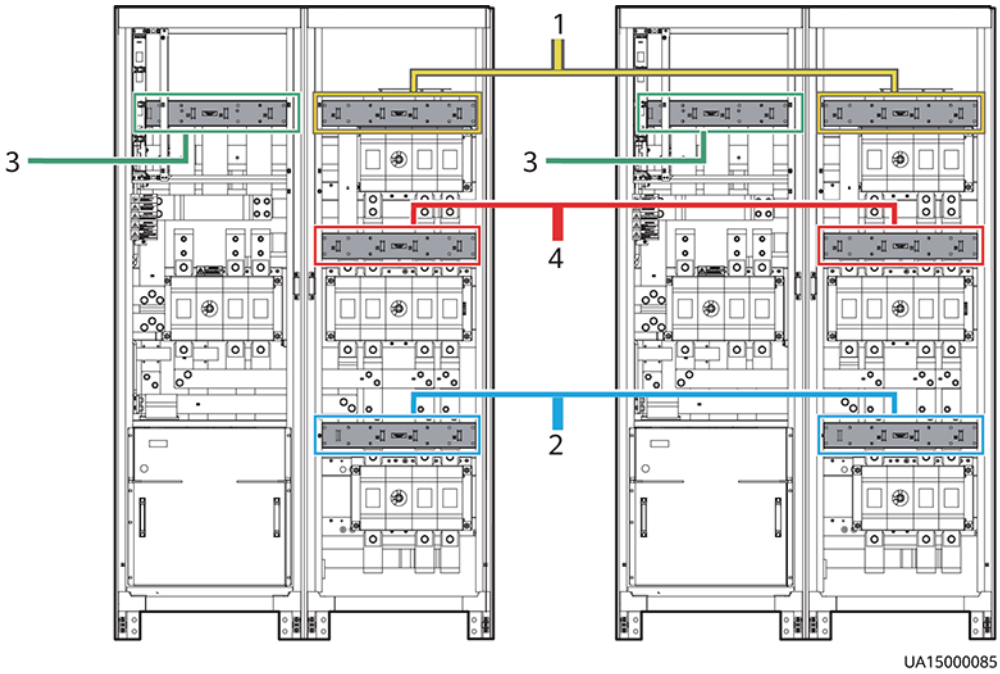

(1) Mains input power cables (2) Bypass input power cables (3) Battery cables (4) Output power cables

Figure 3-96, **Figure 3-97**, and **Figure 3-98** show the conceptual diagram and cable connections for a bus system consisting of two UPSs.

NOTICE

The length and specifications of power cables on each UPS must be the same to achieve current equalization in bypass mode. The power cables include bypass input power cables and UPS output power cables.

Figure 3-96 Conceptual diagram of a dual-bus system

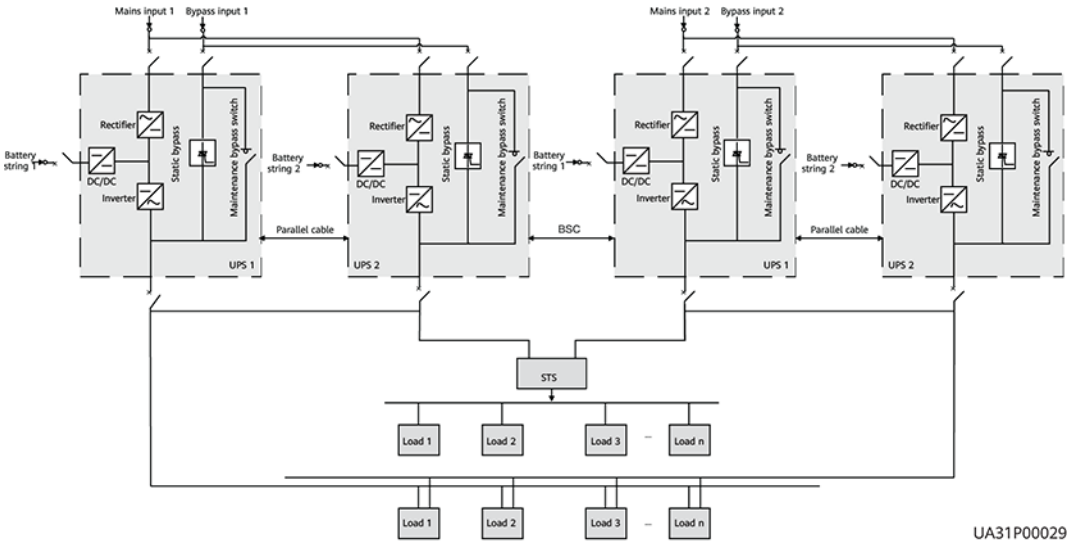

Figure 3-97 Cable connections for a dual-bus parallel system (400 kVA UPS)

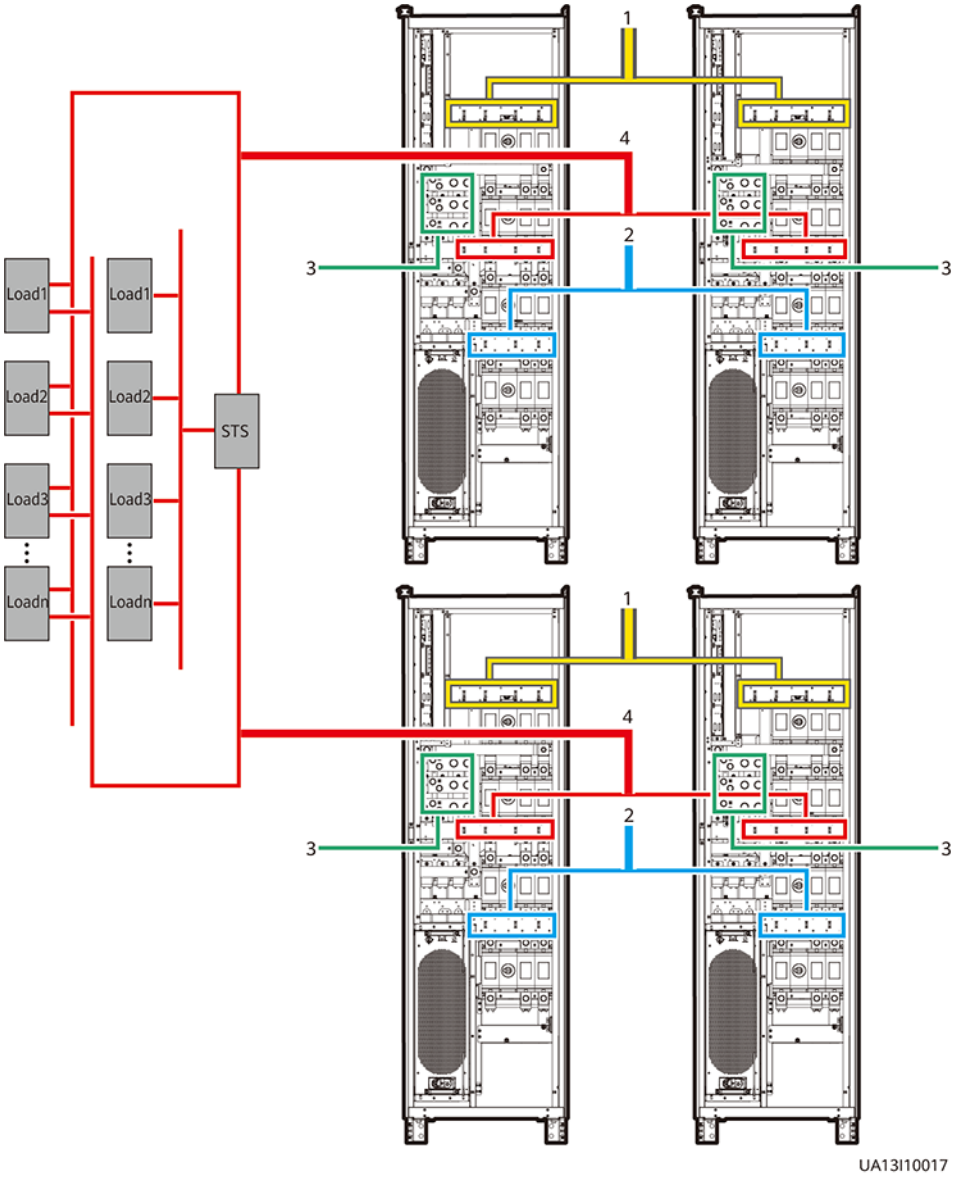

(1) Mains input power cables (2) Bypass input power cables (3) Battery cables (4) Output power cables

Figure 3-98 Cable connections for a dual-bus parallel system (800 kVA UPS)

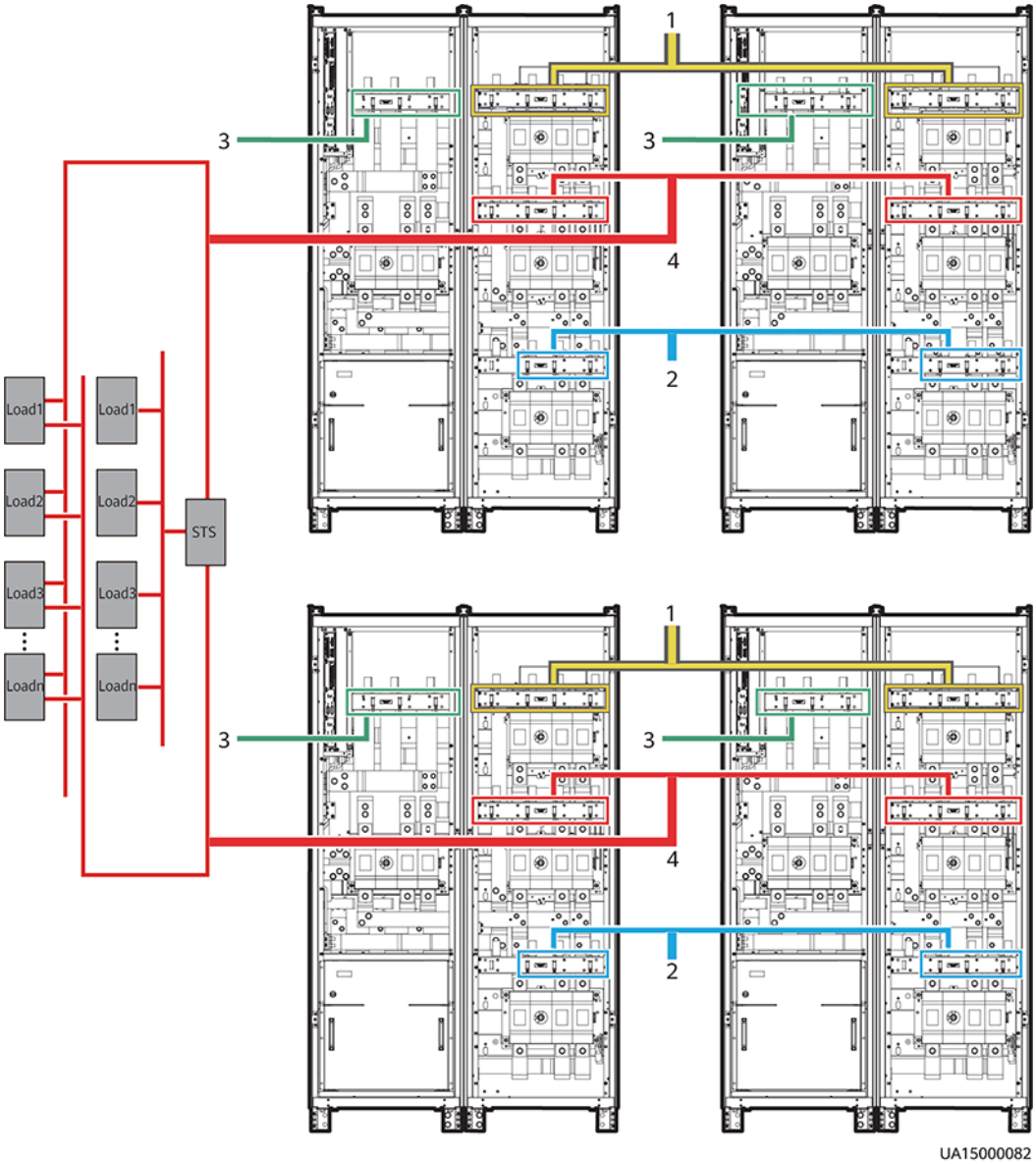

(1) Mains input power cables (2) Bypass input power cables (3) Battery cables (4) Output power cables

----End

3.3.2 Connecting Signal Cables

Connecting Signal Cables to a Parallel System

Connect the parallel ports on the UPSs over parallel cables to create a loop.

- **Figure 3-99** and **Figure 3-100** show the wiring principle for an N+X parallel system.

Figure 3-99 N+X parallel system topology

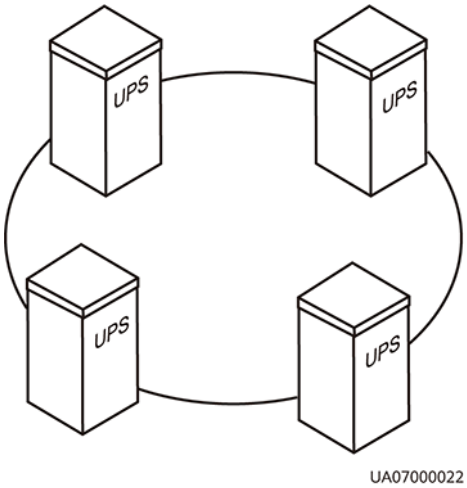

NOTICE

Figure 3-100 shows only the CM, which stands for the UPS.

Figure 3-100 Signal cable connections of N+X parallel system

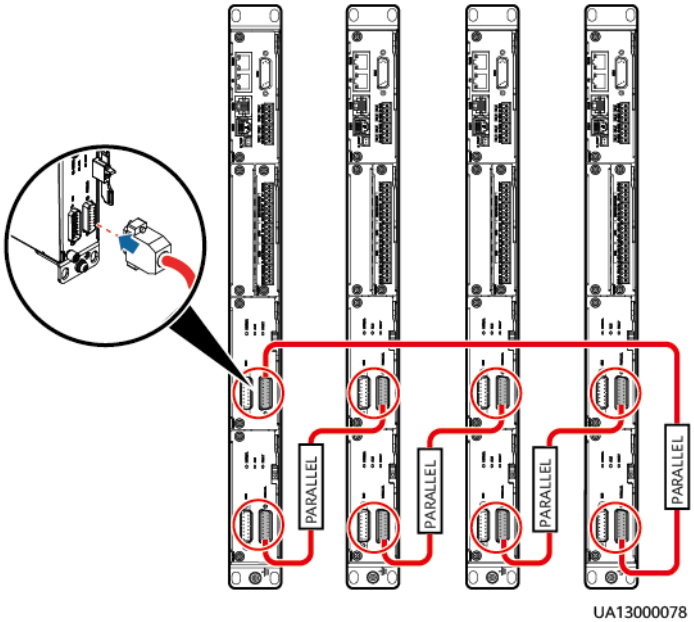

- BSC master and slave cables are required in a dual-bus parallel system. **Figure 3-101** shows the cable connections for a dual-bus system containing two master systems.

Figure 3-101 Connecting signal cables to a dual-bus system

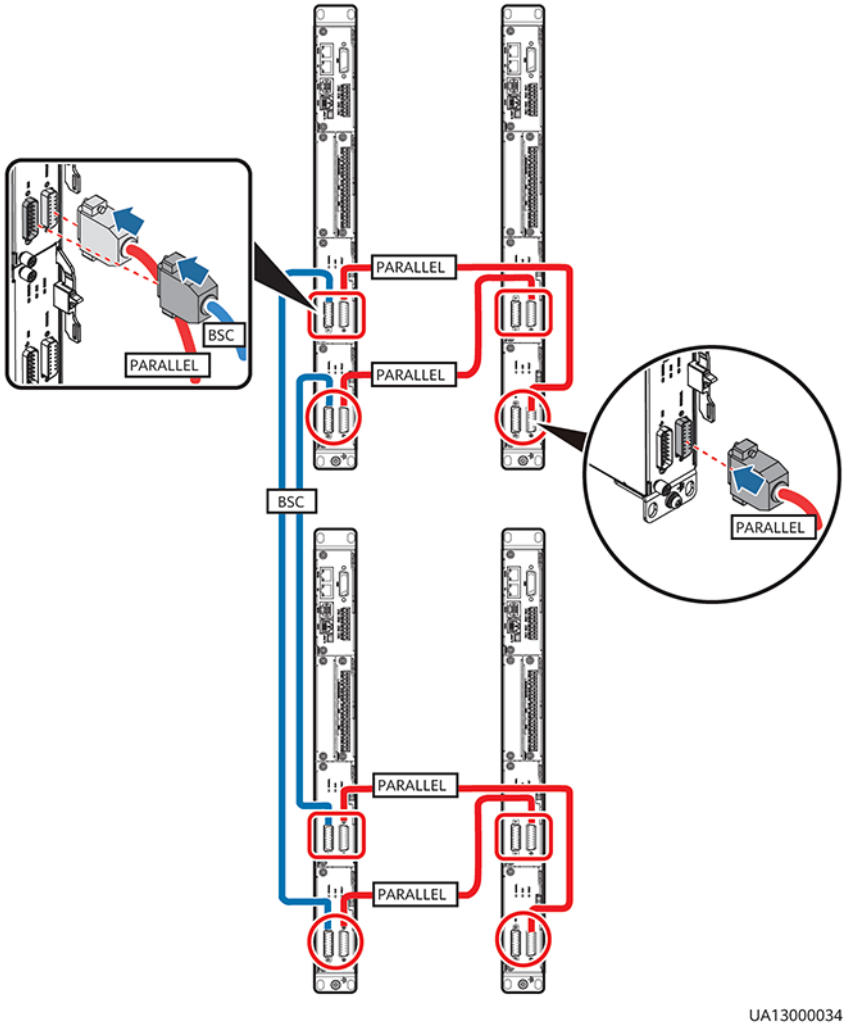

Connecting Other Signal Cables

Connect signal cables for each UPS.

3.4 Verifying the installation

NOTICE

The installation must be verified according to the acceptance criteria. Otherwise, the UPS may be damaged.

Table 3-12 Checklist

No.	Check Item	Acceptance Criteria
01	Fire extinguishing system in the equipment room or temporary fire extinguishing devices	The fire extinguishing system has been installed and enabled in the equipment room, or temporary fire extinguishing devices have been configured according to the construction specifications.
02	Air exhaust vents and water pipes of air conditioners or fresh air system	The cabinet is installed in an area far away from liquids. The cabinet is not installed under areas prone to condensation, such as under water pipes and air exhaust vents, or areas prone to water leakage, such as air conditioner vents, ventilation vents, or feeder windows of the equipment room. No liquid enters the equipment to prevent faults or short circuits.
03	Condensation on the cabinet surface	The air conditioners in the equipment room are turned on and anti-condensation measures are taken.
04	Cabinet installation	The cabinet is securely installed and does not tilt due to vibration.
05	Neat arrangement	The UPS and its adjacent cabinets are neatly arranged and secured with connecting kits.
06	Cable routing	Cables are routed properly as required by the customer.
07	Cable labels	Both ends of a cable are labeled. Labels are concise and easy to understand.
08	Cable ties	Distances between cable ties are the same, and no burr exists.
09	Connections of power cables, ground cables, and signal cables	Input power cables, output power cables, cables between batteries, and ground cables are securely connected. The spring washers are leveled properly for screws. Signal cables are securely connected. Use a torque wrench to check the torque of the screws. The torque must meet the following requirements: 120 N·m for M16 screws; 47 N·m for M12 screws; 27 N·m for M10 screws; 13 N·m for M8 screws.
10	Grounding	The resistance between the UPS ground bar and the equipment room ground bar is less than 0.1 ohm.

No.	Check Item	Acceptance Criteria
11	AC phase sequence	For a single UPS, the mains input, bypass input, and output phase sequences are correct. For a parallel system, the phase sequences of each UPS must be consistent.
12	Battery cables	The battery strings are correctly connected to the UPS.
13	Cable diameter	Select the cable diameter in strict compliance with the user manual.
14	Short circuits between mains input, bypass input/output, and battery cables	Use a multimeter to check that the mains input, bypass input/output, and battery cables are not short-circuited.
15	DC voltages between the positive terminal of the lead-acid battery and ground bar and between the negative terminal of the lead-acid battery and ground bar	The voltages between the positive terminal of the lead-acid battery and ground bar and between the negative terminal of the lead-acid battery and ground bar are lower than 6 V.
16	Foreign matter cleaning inside the cabinets	The inside and outside of the cabinets are free from conductive dust or other foreign matter. 1. There is no foreign matter (such as copper wires and screws) on the top of the cabinets. 2. There is no foreign matter on the copper bar terminals. 3. There is no foreign matter around switch terminals. 4. There is no foreign matter on the bottom plates of the cabinets. 5. There is no foreign matter on the rear module subracks.
17	Air filters on the front doors of cabinets	The air filters on the front doors of the cabinets are intact. Any damaged air filter should be replaced promptly. Removing an air filter will compromise the equipment performance, which may result in equipment damage.

No.	Check Item	Acceptance Criteria
18	Dust covers on the cabinets	The dust covers on the cabinets are intact. Any damaged air filter should be replaced promptly. Do not remove the dust covers during construction or before power-on. Otherwise, the equipment may be damaged.

NOTE

1. In the scenarios where holes are drilled for routing cables or covers are removed for routing cables, after routing cables and checking cable connections, use sealing putty to fill in the gap between the cables and the cabinet.
2. After the checks are performed, reinstall all the covers.
3. Do not remove the dustproof cover before power-on to prevent dust inside the UPS.

Figure 3-102 Positions to be checked for foreign matter (400 kVA)

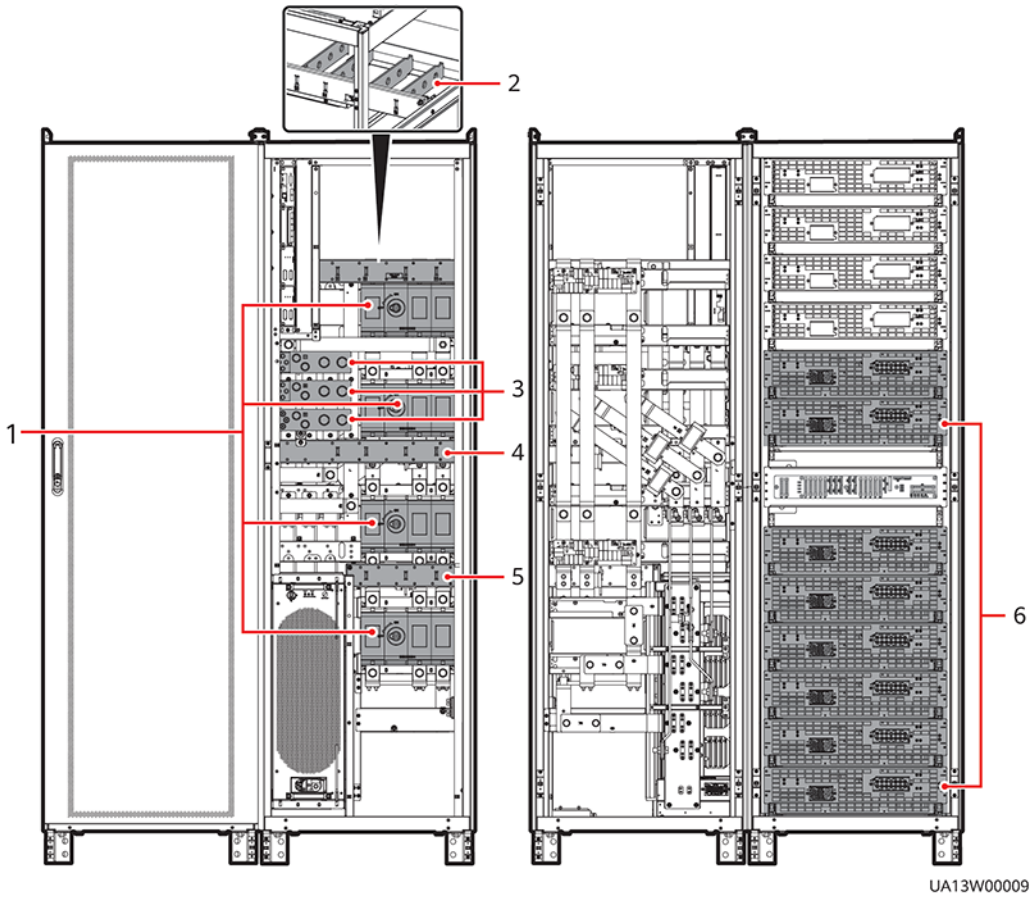

(1) Switches (2) Mains input wiring copper bar (3) Battery input wiring copper bar

(4) Output wiring copper bar (5) Bypass input wiring copper bar (6) Rear of modules

Figure 3-103 Positions to be checked for foreign matter (800 kVA)

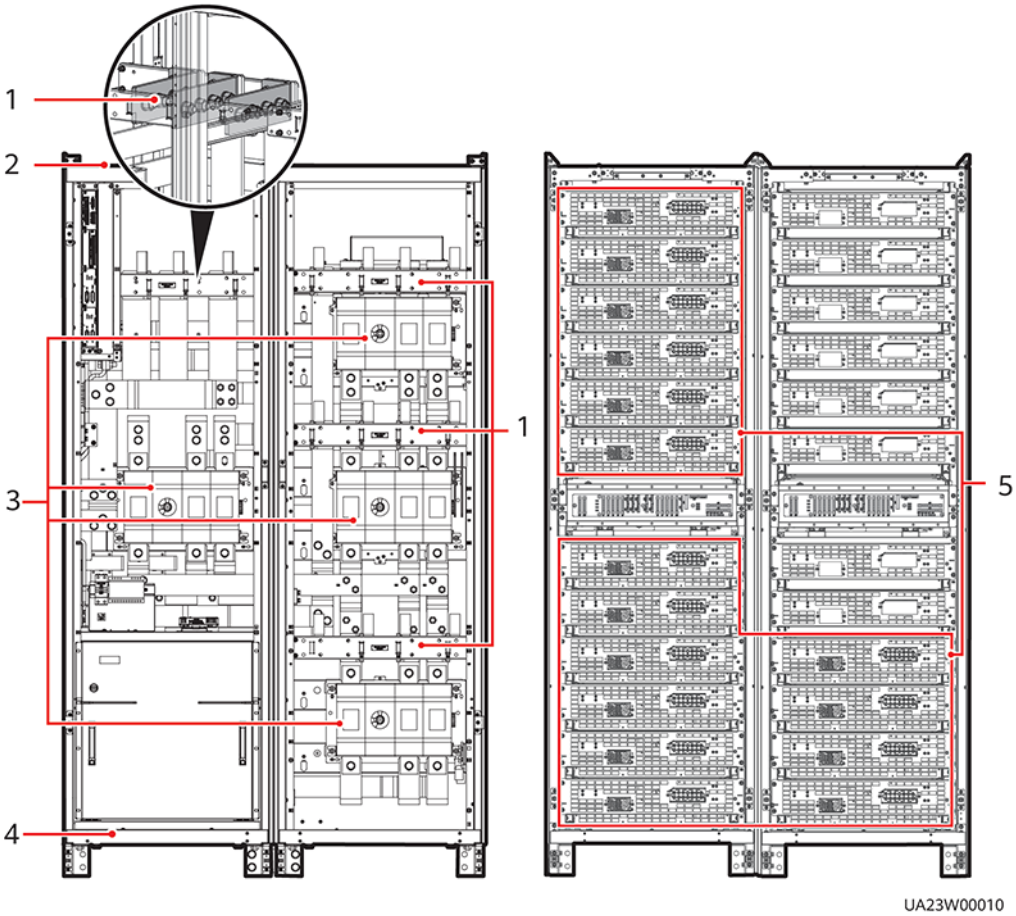

(1) Cabinet top (2) Wiring terminal block (3) Switches

(4) Cabinet bottom (5) Rear of modules

3.5 Sealing Cabinets

CAUTION

- If the equipment will not be powered on after installation, take dustproof measures (for example, use a dust cover) to prevent equipment damage due to dust buildup inside it. Remove the dust cover only when the equipment is ready for operation.
- After the installation is complete, take anti-condensation measures and keep the air conditioner running. Do not store the equipment in an environment where the temperature and humidity are uncontrollable for a long period of time. Otherwise, the equipment may be damaged due to condensation.
- Use the sealing putty delivered with the equipment to seal the cabinet.
- Do not remove the transparent film.
- If the sealing putty covers the aluminum foil film, do not cut the sealing putty.

Step 1 Ensure that all items have been checked after the installation.

Step 2 Fill in gaps between the cables and the cabinets with sealing putty.

1. Remove the paper protective film from the sealing putty and keep the transparent film.
2. Fill the gaps between the cables and the cabinets with the sealing putty. Ensure that the transparent film faces upward.

Figure 3-104 Filling a gap with sealing putty

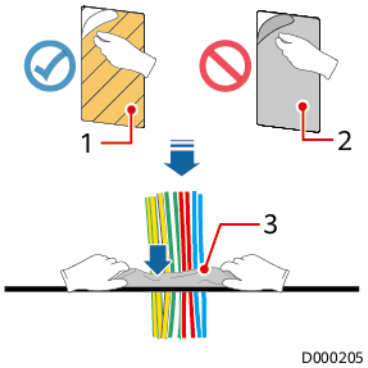

(1) Paper protective film (2) Transparent film (3) Sealing putty (with the transparent film facing upward)

Step 3 Reinstall all covers.

Step 4 Close the cabinet doors.

NOTICE

Do not remove the dust cover during construction or before the device is powered on. Remove the cover only when the device is ready for operation. Otherwise, device faults may occur.

Figure 3-105 Dust covers

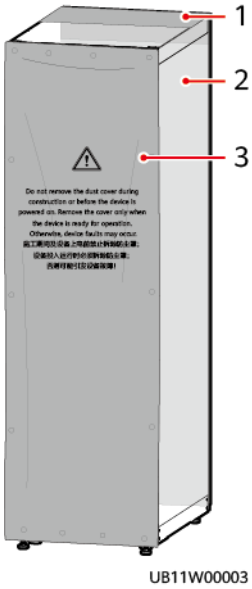

(1) Top dust cover (if any) (2) Rear dust cover (3) Front dust cover

----End

4 Single UPS Commissioning

DANGER

Wear dedicated protective gears and use insulated tools to avoid electric shocks or short circuits.

4.1 Powering On and Starting the UPS

Prerequisites

Measure the voltage and frequency of the UPS upstream input switch. The line voltage range is 138–485 V AC, and the frequency range is 40–70 Hz.

4.1.1 Power-On

Preparing for Power-On

- Before power-on, ensure that the document bag has been removed from the cabinet.
- Before power-on, ensure that the devices have passed all check items in the section "Verifying the Installation."
- Before power-on, ensure that all the UPS switches and upstream switches are OFF.
- Before power-on, check that the environment complies with the requirements, cables are connected correctly, the torque meets requirements, and cables are not short-circuited.

Procedure

Step 1 If desiccant is available inside the cabinets, remove the desiccant.

Step 2 Turn on the upstream bypass and mains input switches.

Step 3 (Full configuration model) Turn on the UPS bypass input switch, mains input switch, and output switch.

 Copyright © Huawei Digital Power Technologies Co., Ltd.

After the UPS is powered on, initialization begins. The MDU displays the initialization progress bar.

----End

4.1.2 Initial Startup

CAUTION

Do not short-circuit the battery copper bars to the shell.

- Clean up the cables and ensure that the battery copper bars of the UPS are not connected to the shell.
- Before powering on batteries, ensure that batteries are not short-circuited.
- After the UPS is powered on, do not perform construction around the UPS to prevent metal foreign matter from splashing.

NOTICE

If the equipment is started for the first time, obtain authorization for the equipment and set related parameters on the **Settings Wizard** screen. If the equipment is not started for the first time, skip this section.

Procedure

Step 1 Obtain the startup password through the app. After the application is approved, enter the password on the service authorization screen of the device to complete device authorization.

NOTICE

Technical support engineers can obtain the service authorization code through the app. For details, see the *Data Center Facility Deployment Guide*.

Step 2 If the software version is incompatible, activate the software version as instructed on the LCD.

- **Activating the software versions in batch (recommended)**
  a. After the message "**Incompatible software version. Do you want to upgrade the software?**" is displayed on the LCD, tap **No**.
  b. Activate the software versions of all modules.
     - On the LCD, choose **Maintenance** > **USB Operations** > **Upgrade Software** > **Details** > **Activate**.
     - On the WebUI, choose **Maintenance** > **System Upgrade** > **Activate All**.
- **Activating the software versions one at a time**: After the message "**Incompatible software version. Do you want to upgrade the software?**" is

displayed on the LCD, tap **Yes** to activate the module software versions one by one.

Step 3 Set the language, time and date, iManager-M service, network parameters, system parameters, and battery parameters on the **Settings Wizard** screen.

NOTICE

Set system parameters with caution. Incorrect setting may affect the normal UPS operation.

- Set **Single/Parallel** after double check. Incorrect settings may affect the normal UPS operation.
- **Output voltage level** refers to the line voltage level. Set it based on site requirements.
- Set **Output frequency** correctly. Otherwise, loads may not run normally.
- Set all battery parameters correctly based on site requirements. Battery parameter settings are critical to battery maintenance, battery lifespan, and UPS discharge time.

 Copyright © Huawei Digital Power Technologies Co., Ltd.

Figure 4-1 Settings Wizard

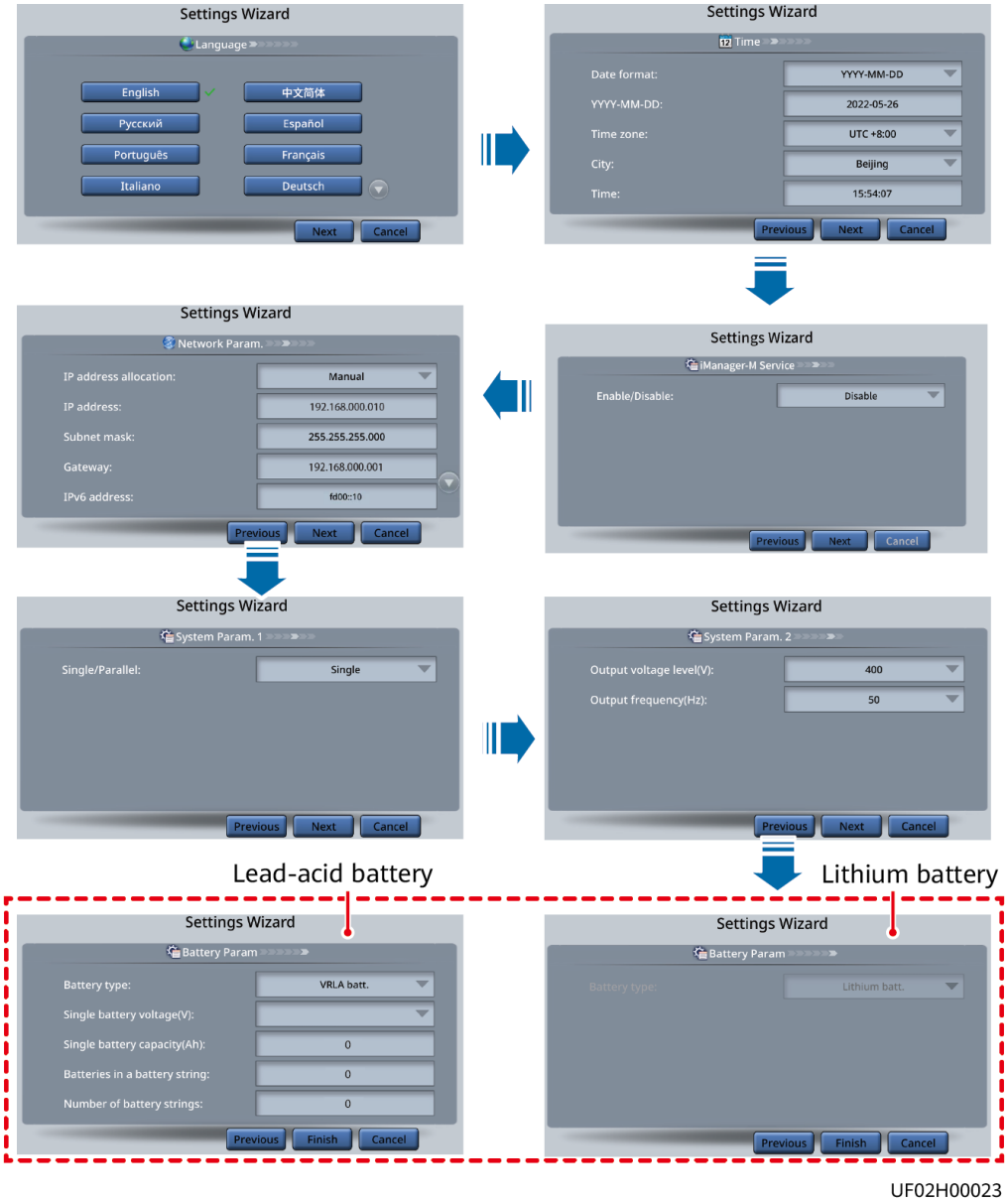

UF02H00023

NOTE

- Set the time and date correctly. Incorrect time and date will cause false fault analysis during maintenance or repair, affecting the normal operation.
- If you need to use the iManager-M function, perform operations by referring to **4.1.4.1 Accessing iManager-M Service**. Otherwise, retain the default setting **Disable** of iManager-M.
- After you set network parameters, connect the UPS to the network over a network cable, which enables you to remotely manage the UPS. If you do not need remote management, retain the default network parameter settings.

Step 4 After you set parameters on the **Settings Wizard** screen, the system displays the **Bypass mode** and **No battery** alarms, which do not need to be handled. Other alarms need to be handled.

NOTE

- After you set parameters on the **Settings Wizard** screen, choose **System Info** > **Settings** > **System Settings**. Check that **Requisite modules** and **Redundant modules** match the actual values.
- If dry contact signals are connected to the system, choose **System Info** > **Settings** > **Dry Contact Set**. Check that the connected dry contacts have been enabled and that the disconnected dry contacts have been disabled.

Step 5 If the system has connected to the remote EPO switch, you need to choose **Monitoring** > **UPS System** > **Running Parameter** > **System Settings** on the WebUI and set **EPO detection** to **Enable**.

Figure 4-2 EPO detection setting

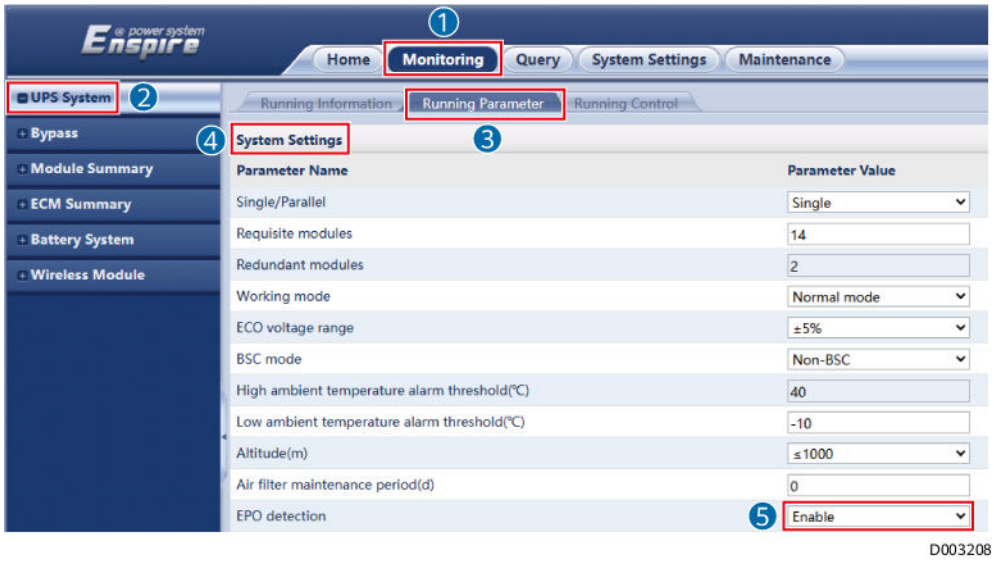

Step 6 View the system running status diagram on the LCD to check that the UPS is working in bypass mode.

----End

4.1.3 User Names and Initial Passwords

This section describes the user names and initial passwords required for configuring the UPS.

Table 4-1 User names and initial passwords

User Name	Initial Password		Permission
admin	LCD	000001	Has permissions on all functions provided by the UI.
	WEB	Changeme	

User Name	Initial Password		Permission
operator	LCD	000001	Browses system running information, exports system information, starts/shuts down the UPS, clears faults, and controls the buzzer. Other control and maintenance functions that may affect system operation are unavailable to this role and parameters cannot be set.
	WEB	Changeme	Browses system running information, exports system information (including historical alarms, active alarms, operation logs, electronic labels, and performance data) except fault data, and clears faults. Other control and maintenance functions that may affect system operation are unavailable to this role and parameters cannot be set.
engineer	WEB	Changeme	Has all permissions except the permission to manage other users.

CAUTION

- In certain software versions, there are engineer and operator users. The actual users may vary.
- Change the password after your first login to prevent unauthorized personnel from using your account to modify system configurations, which could affect the normal operation of the system.
- You can change the **Password** by choosing **System Info.** > **Settings** > **User Settings** on the LCD or **Maintenance** > **User Management** on the WebUI.
- By default, there are two users (**admin** and **operator**) on the LCD. Only one user can be online at one time.
- The WebUI supports a maximum of 10 users and a maximum of 4 concurrent online users.
- If no operation is performed on the LCD for 1 minute after login, the system automatically logs out. To perform operations, select **User name** and enter **Password** in the displayed login dialog box to log in again.

4.1.4 Setting Parameters for Optional Components

4.1.4.1 Accessing iManager-M Service

NOTICE

- If the 4G module has been installed, use the method described in the 4G module access scenario (LCD or WebUI) to complete iManager-M service access.
- If the device has been connected to the LAN switch or router, use the method described in the FE access scenario (LCD or WebUI) to complete iManager-M service access.

4G Module Access Scenario (LCD)

Step 1 Set **iManager-M Service** parameters.

On the LCD, choose **System Info** > **Settings** > **Settings Wizard**. On the **iManager-M Service** screen, set **Enable/Disable** to **Enable** and **Access channel** to **4G**.

NOTE

If **Access authentication code** on the **iManager-M Service** screen is empty, obtain the authentication code from the position shown in the following figure and enter it in **Access authentication code**.

Figure 4-3 Documentation QR code on the cabinet

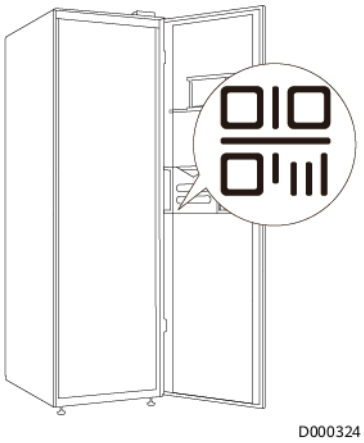

Figure 4-4 About

(1) Authentication code

Step 2 Choose **System Info.** > **Runn. Info.** > **Wireless Module** on the LCD. Confirm that the 4G module dial-up is successful and check the signal strength.

Step 3 Connect the device on the app. For details, see the *iManager-M Quick Reference Guide*.

----End

4G Module Access Scenario (WebUI)

Step 1 Set wireless module parameters.

Choose **Monitoring** > **Wireless Module** > **Running Parameter** on the WebUI. Set **Mobile data** to **Enable** and set operator parameters based on site requirements.

Step 2 Check the running status of the wireless module.

Choose **Monitoring** > **Wireless Module** > **Running Information** on the WebUI. Check the 4G module running status, confirm that the 4G module dial-up is successful, and check the signal strength.

NOTICE

If the dial-up connection fails, the possible causes are as follows:

- The SIM card is invalid. (The account is deregistered because it has been in arrears for a long time.)
- Network signals are weak.

Step 3 Set and test domain name parameters.

1. Choose **System Settings** > **NMS Application** > **BIN** > **Communication Parameters** on the WebUI. Set parameters as follows:
   - **Address type**: **Domain name**
   - **Server domain name** and **Port number**: Retain the default values.
   - **Connection test link setup port**: **4G**
2. Click **Test Connect**. After the test is successful, click **Submit**.

Step 4 Connect the device on the app. For details, see the *iManager-M Quick Reference Guide*.

----End

FE Access Scenario (LCD)

Step 1 Set **iManager-M Service** parameters and the IP addresses for the DNS server.

Choose **System Info.** > **Settings** > **Settings Wizard** on the LCD. On the **iManager-M Service** screen:

- Set **Enable/Disable** to **Enable** and **Access channel** to **FE**.
- Set IP addresses for the DNS server based on site requirements.

Step 2 Set the IP address of the device.

Choose **System Info.** > **Settings** > **Settings Wizard** on the LCD. On the **Network Param.** screen, set the IP address, subnet mask, and gateway based on site requirements.

Step 3 Connect the device on the app. For details, see the *iManager-M Quick Reference Guide*.

----End

FE Access Scenario (WebUI)

Step 1 Set the IP address of the device.

Choose **System Settings** > **Comm. Settings** > **IP Settings** on the WebUI. Set **IP address type** to **IPv4**, and set the IP address, subnet mask, and default gateway based on site requirements.

Step 2 Set IP addresses for the DNS server.

Choose **System Settings** > **Comm. Settings** > **DNS Server Address** on the WebUI. Set IP addresses for the DNS server based on site requirements.

Step 3 Set and test domain name parameters.

1. Choose **System Settings** > **NMS Application** > **BIN** > **Communication Parameters** on the WebUI. Set parameters as follows:
   - **Address type**: **Domain name**
   - **Server domain name** and **Port number**: Retain the default values.
   - **Connection test link setup port**: **FE**
2. Click **Test Connect**. After the test is successful, click **Submit**.

Step 4 Connect the device on the app. For details, see the *iManager-M Quick Reference Guide*.

----End

4.1.4.2 Setting Parameters for the BCB Box

Prerequisites

- This section applies only to lead-acid batteries.
- A BCB box is installed.

Procedure

Step 1 Choose **System Info > Settings** > **Dry Contact Set**, set **MUE05A connection** to **Enable**, and set **BCB connection [OL]** and **Battery breaker [STA]** to **Enable**.

Figure 4-5 BCB connection settings

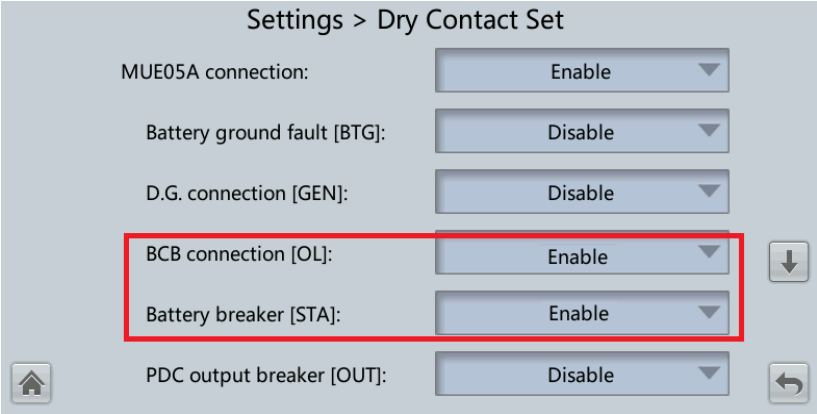

----End

4.1.4.3 Setting the Ambient T/H Sensor (33010516)

Context

- The ambient T/H sensor has been installed by referring to the installation section.
- The ambient T/H sensor can also be used as a battery temperature sensor. The monitoring module distinguishes these two types of sensors through their DIP switch settings.

Procedure

Step 1 Set the DIP switch.

Figure 4-6 DIP switch (33010516)

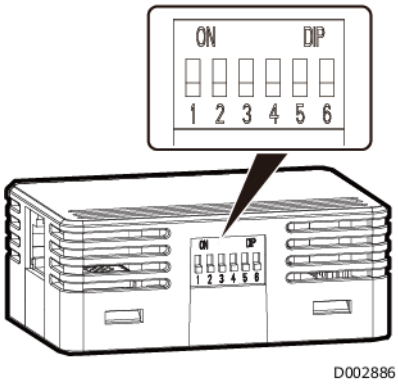

- DIP switch settings on ambient T/H sensors

  Each ambient T/H sensor has a unique DIP switch address. The DIP switch address ranges from 32 to 44. A DIP switch has six binary toggle switches. The left bit is the least significant bit, and the right bit is the most significant bit.

  Figure 4-7 Mapping between DIP switch positions and addresses (ambient T/H sensor)

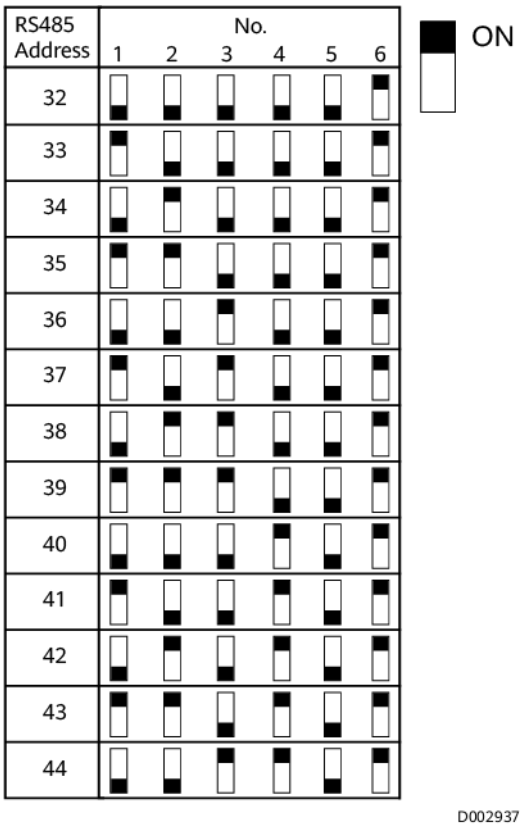

- DIP switch settings on battery temperature sensors

  When an ambient T/H sensor is used as a battery temperature sensor, set the DIP switch to a value in the range of 16 to 28 to monitor the battery temperature.

Figure 4-8 Mapping between DIP switch positions and addresses (battery temperature sensor)

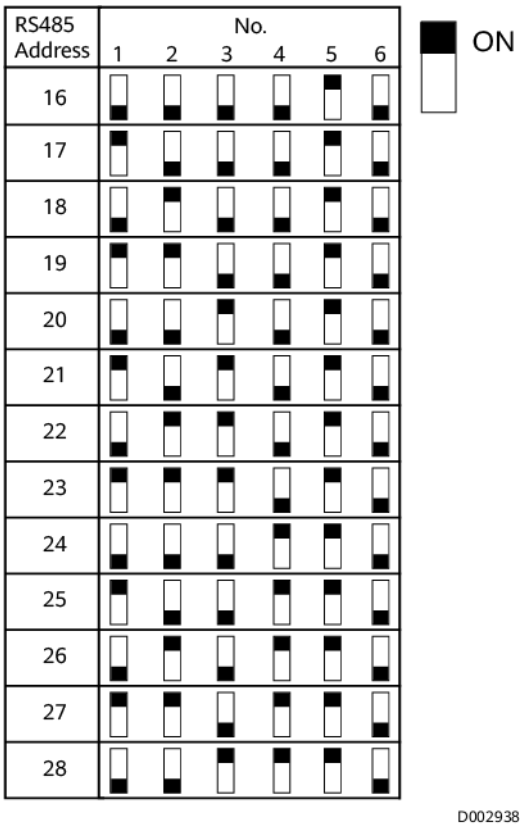

Step 2 Set UI parameters.

NOTICE

The address set on the software must be the same as the address set on the DIP switch. Otherwise, the communication fails.

- The DIP switch address of an ambient T/H sensor ranges from 32 to 44.

  LCD: Choose **System Info** > **Settings** > **Comm. Settings** > **Amb. T/H Sensor**, and set **Start address** and **Quantity**.

Figure 4-9 Ambient T/H sensor

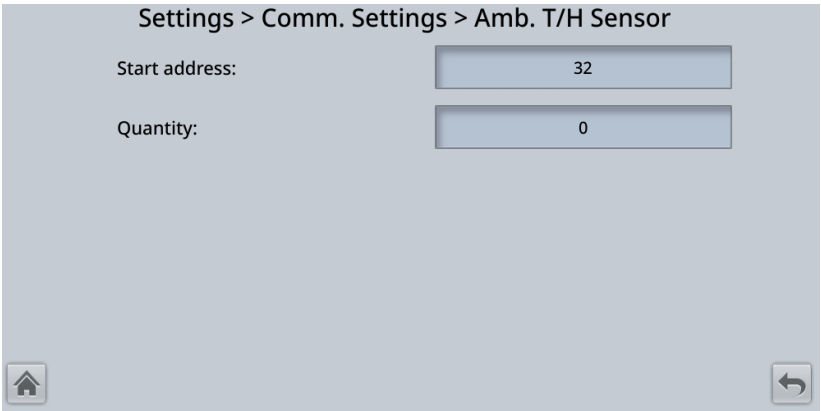

WebUI: Choose **System Settings** > **Comm. Settings** > **Amb. T/H Sensor**, and set **Start address** and **Quantity**.

Figure 4-10 Ambient T/H sensor

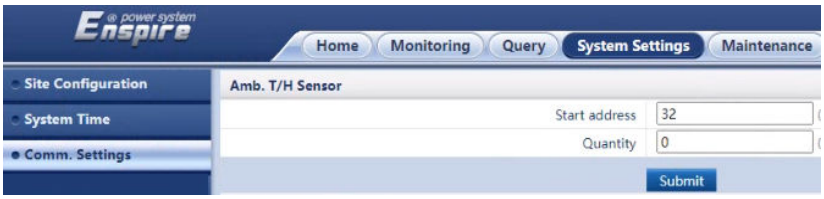

- When an ambient T/H sensor is used as a battery temperature sensor, the DIP switch address ranges from 16 to 28.

  LCD: Choose **System Info** > **Settings** > **Comm. Settings** > **Batt Temp Sensor**, and set **Start address** and **Quantity**.

Figure 4-11 Battery temperature sensor

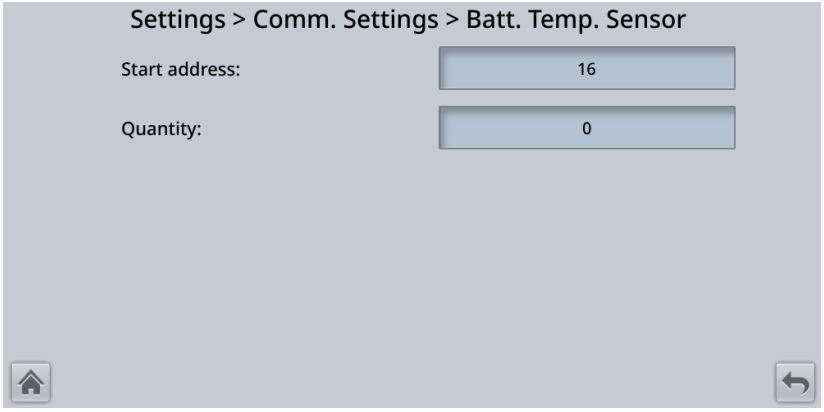

WebUI: Choose **System Settings** > **Comm. Settings** > **Batt Temp Sensor**, and set **Start address** and **Quantity**.

Figure 4-12 Battery temperature sensor

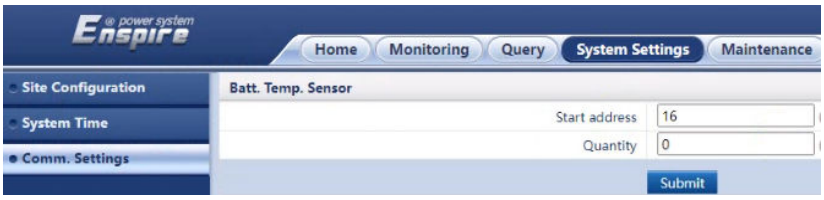

----End

4.1.4.4 Setting the Ambient T/H Sensor (02312PBL or 02310NBS)

Context

- The ambient T/H sensor has been installed by referring to the installation section.

- The ambient T/H sensor can also be used as a battery temperature sensor. The monitoring module distinguishes these two types of sensors through their DIP switch settings.

Procedure

Step 1 Set the DIP switch.

Figure 4-13 DIP switch (02312PBL)

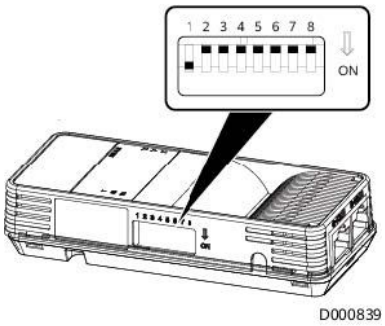

NOTE

DIP switches 1–6 are used to set the device address, DIP switch 7 is reserved, and DIP switch 8 is used to switch the temperature unit (ON is for Fahrenheit and OFF is for Celsius).

Figure 4-14 DIP switch (02310NBS)

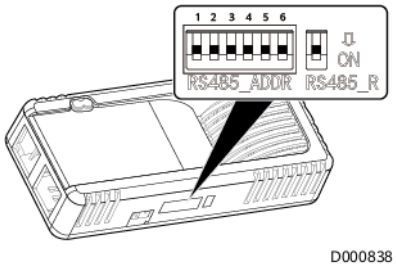

NOTE

The RS485_R DIP switch is used to enable a build-out resistor so that the ambient T/H sensor can communicate with the controller. If there are no more than four ambient T/H sensors on the bus, the RS485_R DIP switch does not need to be set. If there are more than four, flip the RS485_R DIP switch of the ambient T/H sensor furthest from the UPS to ON.

- DIP switch settings on ambient T/H sensors

  Each ambient T/H sensor has a unique DIP switch address, ranging from 32 to 44. A DIP switch has six binary toggle switches. The bit on the leftmost is the most significant bit, and the bit on the rightmost is the least significant bit.

Figure 4-15 Mapping between DIP switch positions and addresses (ambient T/H sensor)

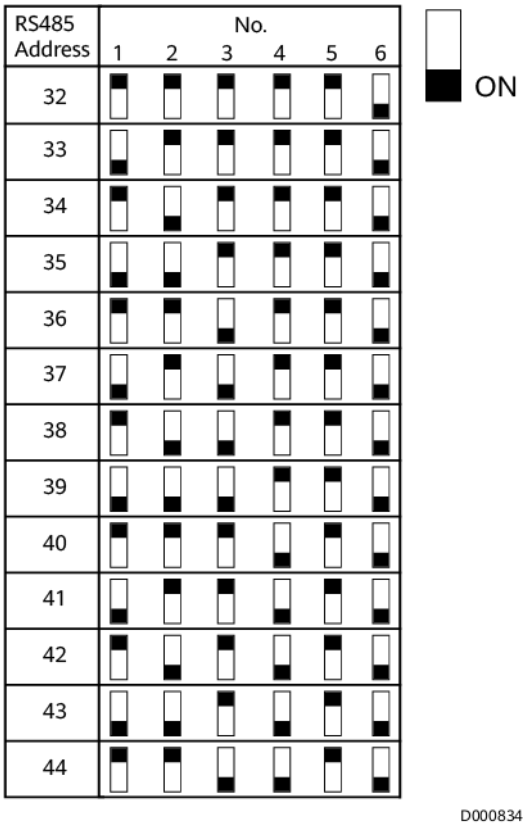

- DIP switch settings on battery temperature sensors

  When an ambient T/H sensor is used as a battery temperature sensor, set the DIP switch to a value in the range of 16 to 28 to monitor the battery temperature.

Figure 4-16 Mapping between DIP switch positions and addresses (battery temperature sensor)

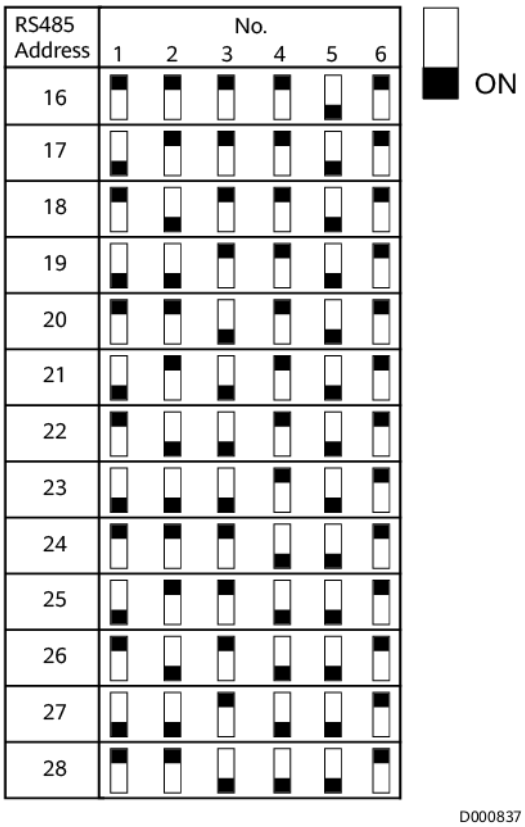

Step 2 Set UI parameters.

NOTICE

The address set on the software must be the same as the address set on the DIP switch. Otherwise, the communication fails.

- The DIP switch address of an ambient T/H sensor ranges from 32 to 44.

  LCD: Choose **System Info** > **Settings** > **Comm. Settings** > **Amb. T/H Sensor**, and set **Start address** and **Quantity**.

Figure 4-17 Ambient T/H sensor

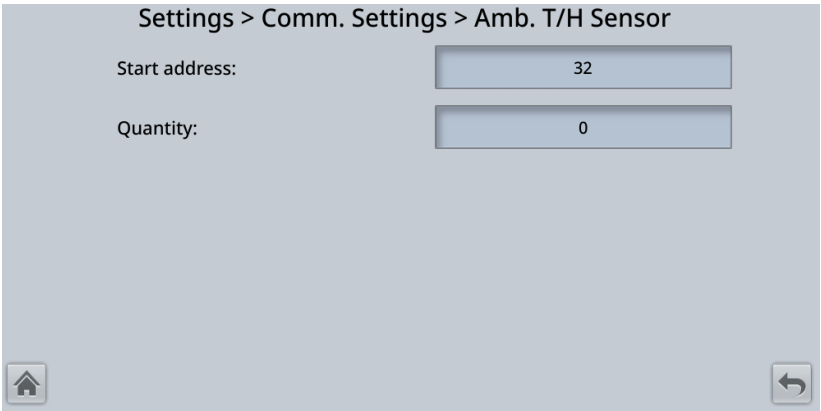

WebUI: Choose **System Settings** > **Comm. Settings** > **Amb. T/H Sensor**, and set **Start address** and **Quantity**.

Figure 4-18 Ambient T/H sensor

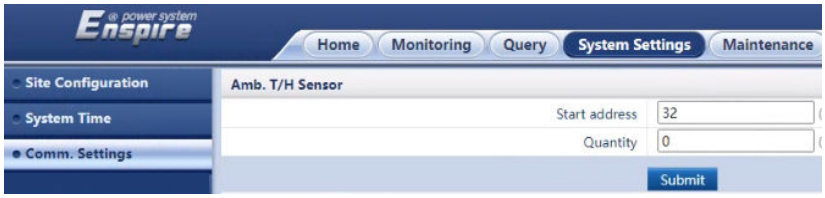

Old WebUI: Choose **Monitoring** > **Comm. Config.** > **Amb T/H Sensor**, and set **Start address** and **Quantity**.

Figure 4-19 Ambient T/H sensor

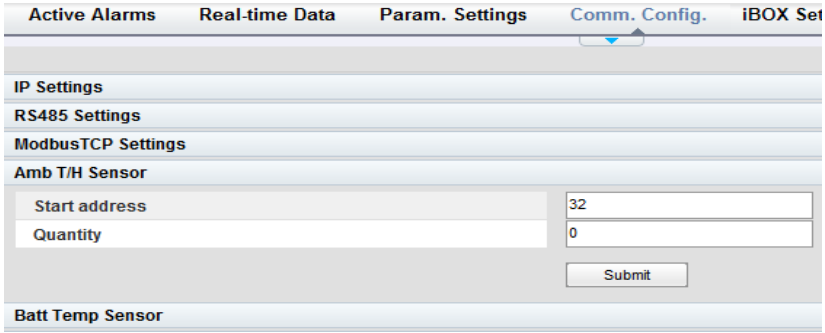

- When an ambient T/H sensor is used as a battery temperature sensor, the DIP switch address ranges from 16 to 28.

  LCD: Choose **System Info** > **Settings** > **Comm. Settings** > **Batt Temp Sensor**, and set **Start address** and **Quantity**.

  Figure 4-20 Battery temperature sensor

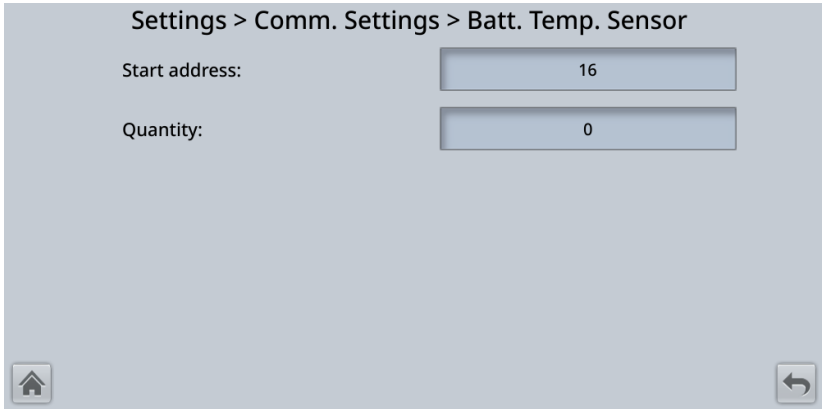

  WebUI: Choose **System Settings** > **Comm. Settings** > **Batt Temp Sensor**, and set **Start address** and **Quantity**.

Figure 4-21 Battery temperature sensor

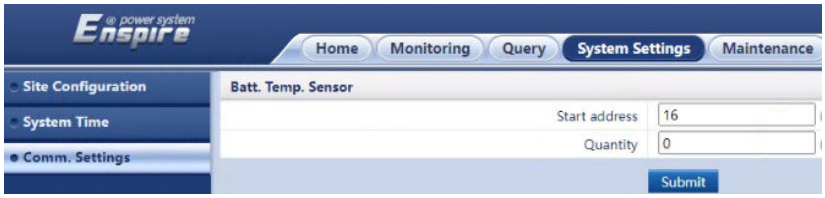

Old WebUI: Choose **Monitoring** > **Comm. Config.** > **Batt Temp Sensor**, and set **Start address** and **Quantity**.

Figure 4-22 Battery temperature sensor

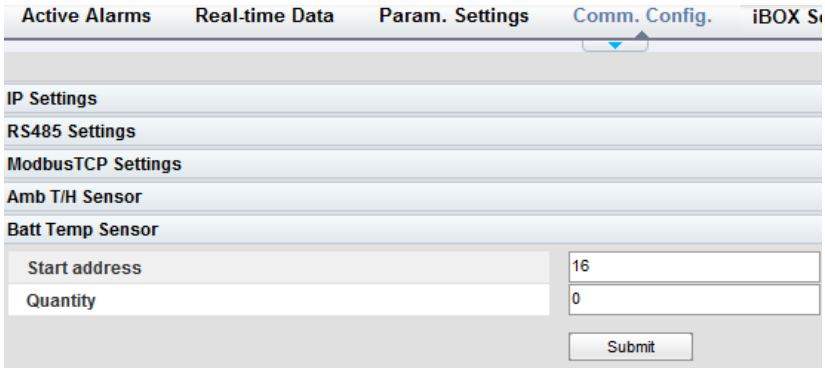

----End

4.1.4.5 Setting the Backfeed Protection Card

Prerequisites

A backfeed protection card is installed.

Procedure

Step 1 On the LCD, choose **System Info** > **Settings** > **Dry Contact Set** and set **MUE06A connection** to **Enable**.

NOTE

If **MUE06A connection** is set to **Enable** and the backfeed protection card fails to communicate with the UPS, the system reports a **Dry contact board fault** alarm.

----End

4.1.5 Mode Settings

4.1.5.1 Setting ECO Mode

Prerequisites

The UPS is working in inverter mode.

Context

- The UPS is set to non-ECO mode by default. Set the UPS to ECO mode when it is required.
- In ECO mode, the bypass takes priority over the inverter in supplying power. If the bypass fails, the UPS transfers to inverter mode.
- Both a single UPS and a parallel system support ECO mode which ensures a higher efficiency.
- To avoid frequent transfers between ECO mode and normal mode, do not set ECO mode when the bypass input is unstable or is sensitive to load changes.
- Before setting ECO mode, ensure that the bypass is working properly.

Procedure

Step 1 On the LCD, choose **System Info** > **Settings** > **System Settings** and set **Working mode** to **ECO**. The information indicating that the UPS works in **Single ECO** mode is displayed on the LCD.

Step 2 Set **ECO voltage range**.

Figure 4-23 ECO specifications

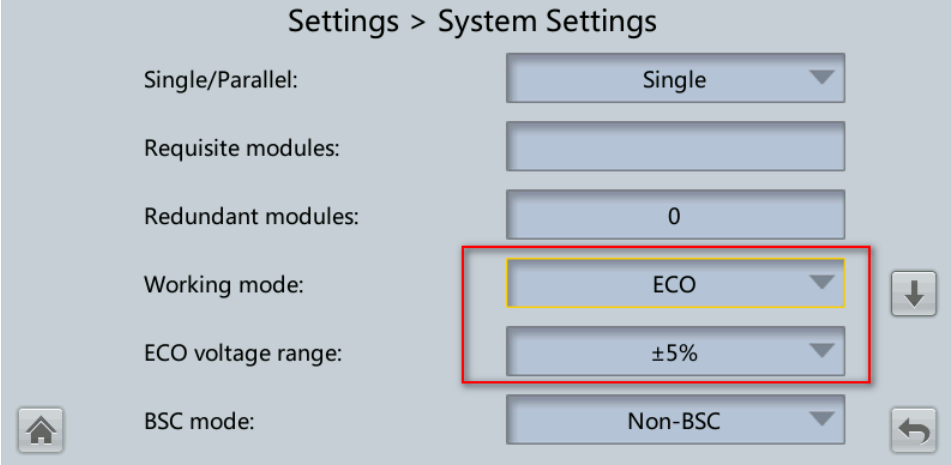

NOTE

If the ECO mode is enabled when the UPS works in inverter mode, the system transfers to ECO mode after the conditions are met. When the ECO mode is abnormal, transfer the UPS to ECO mode 5 minutes after the fault is rectified.

Step 3 (Optional) If you set **ECO mode** when the UPS is in bypass mode, manually start the UPS inverter.

NOTICE

After the inverter is started, the UPS still works in bypass mode, and the inverter is on standby. When the bypass is abnormal, the UPS transfers to inverter mode immediately. If the inverter is not started, the UPS stops supplying power when the bypass is abnormal, and the system may power off.

Figure 4-24 System status in ECO mode

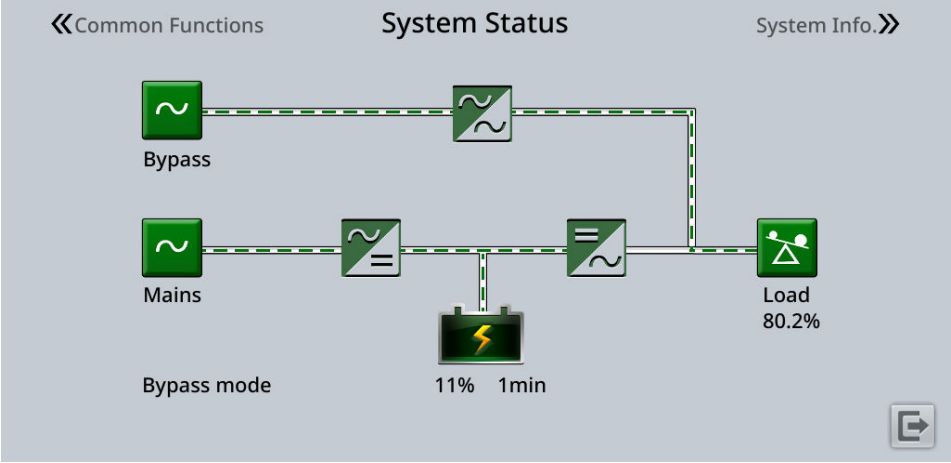

----End

4.1.5.2 Setting the Hibernation Mode

When the load power is small and stable, you can shut down the inverters in some power modules so that these power modules enter hibernation mode and other power modules bear all the load power. This improves the system efficiency in the case of small load power and increases the power module service life.

NOTICE

- Ensure that the load power is stable. If the system load power fluctuation is greater than the rated capacity of half a module (for example, the single-phase load power fluctuation is greater than 8.33 kVA for a 50 kVA module), the UPS may enter and exit from hibernation mode repeatedly.
- Check that the number of redundant power modules and racks are appropriate. If the number is insufficient, the UPS may not enter hibernation mode.

Web

1. On the WebUI, choose **Monitoring** > **UPS System** > **Running Parameter** > **System Settings**, and set **Paral sys hibernate** to **Enable**.
2. Set the module cycle hibernation period to an integer ranging from 1 to 100. The default value is 30.

Figure 4-25 Running Parameter

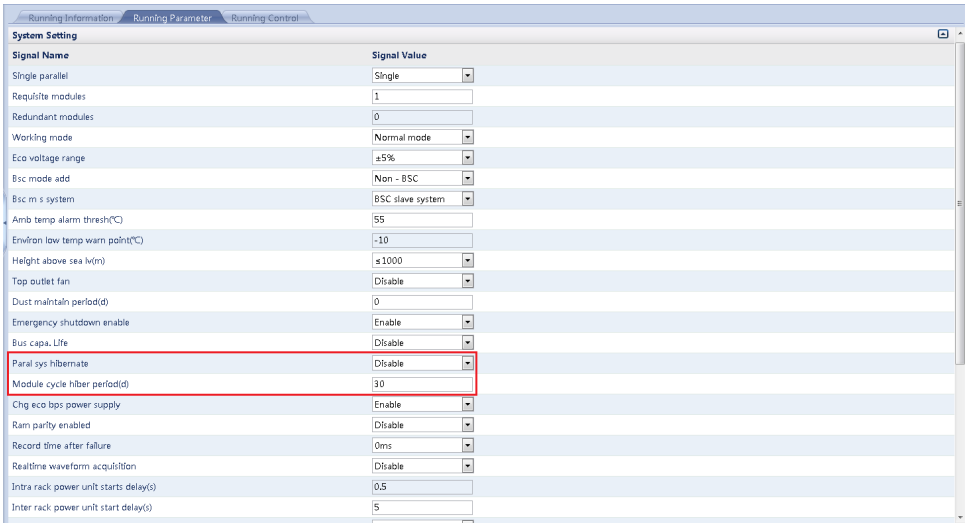

NOTE

Click **Submit** after setting parameters on the WebUI.

Old Web

1. On the WebUI, choose **Monitoring** > **Parameter Settings** > **System Settings**, and set **Paral. sys. hibernate** to **Enable**.
2. Set **Module cycle hiber. period (d)** to an integer ranging from 1 to 100. The default value is **30**.

Figure 4-26 Running Parameter

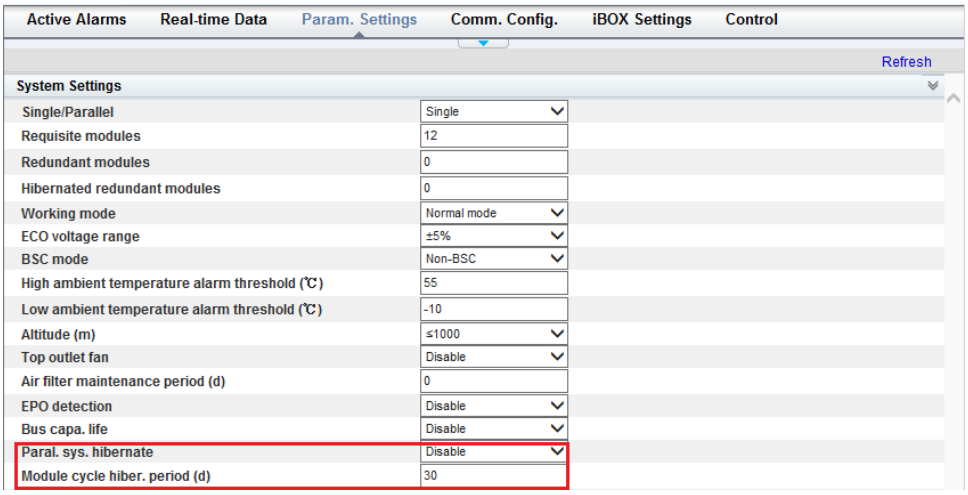

NOTE

Click **Submit** after setting parameters on the WebUI.

4.1.6 Starting the Inverter

Starting the Inverter on the LCD

Step 1 Choose **Common Functions** > **Single Inv. ON** or **System Info** > **Maintenance** > **Single Inv. ON**.

Step 2 In the displayed dialog box, tap **Yes** to start the inverter.

----End

Starting the Inverter on the WebUI

Step 1 Choose **Monitoring** > **UPS System** > **Running Control**, and click **Inv. ON**.

Step 2 In the dialog box that is displayed, click **OK** to confirm the startup.

Step 3 In the displayed dialog box, enter **Login User Password** and click **Submit**.

Step 4 In the displayed dialog box, click **OK** to start the inverter.

NOTE

If the power module receives a startup command when it cannot be started, the startup command will be retained for 1 minute. Within 1 minute, if there is no situation (for example, the power module encounters other faults, executes a shutdown command, or performs fault clearance) that requires the startup command to be cleared and the power module becomes able to start, then the power module responds to the startup command.

----End

4.1.7 Powering On Loads

Context

After the inverter starts, the UPS transfers to inverter mode, and the **Bypass mode** alarm on the LCD disappears.

Procedure

Step 1 Check that no alarm except the **No battery** alarm is displayed on the LCD of the UPS.

Step 2 Check that the battery strings are connected. Turn on the battery input switch for the UPS. (If there are multiple battery strings, turn on the switch of one battery string, measure the voltage where the general battery switch is located, and then turn off the switch of the battery string. Perform the same operations on other battery strings to measure the voltage of each battery string. If the measurement results are consistent, turn on the switch of each battery string one by one, and then turn on the general switch between the battery strings and the UPS.)

Step 3 Check that batteries are properly connected (the **No battery** alarm in the active alarm list of the LCD disappears within 2 minutes and no other alarms are generated).

 Copyright © Huawei Digital Power Technologies Co., Ltd.

Step 4 Turn on the downstream output switch to supply power to loads.

----End

4.2 Shutting Down and Powering Off the UPS

Context

NOTICE

After the inverter is shut down, if the bypass is normal, the UPS transfers to bypass mode; if the bypass is not normal, the UPS supplies no power. Before shutting down the UPS, ensure that all loads have shut down.

Procedure

Step 1 Shut down the inverter.

- Shutting down the inverter on the LCD
  a. Choose **Common Functions** > **Single Inv. OFF** or **System Info** > **Maintenance** > **Single Inv. OFF**.
  b. In the displayed dialog box, tap **Yes** to shut down the inverter.
- Shutting down the inverter on the WebUI
  a. Choose **Monitoring** > **UPS System** > **Running Control**, and click **Inv. OFF**.
  b. In the dialog box that is displayed, click **OK** to confirm the shutdown.
  c. In the displayed dialog box, enter **Login User Password** and click **Submit**.
  d. In the displayed dialog box, click **OK** to shut down the inverter.

If the inverter shuts down and the bypass is normal, the UPS transfers to bypass mode. The **Bypass mode** alarm is displayed on the LCD.

Figure 4-27 Normal bypass

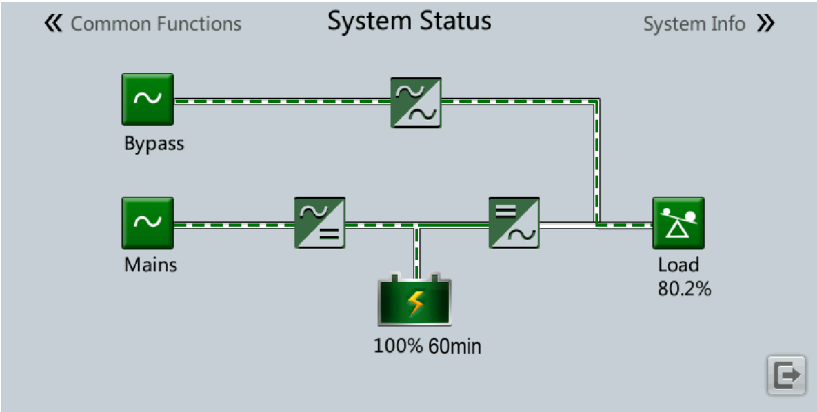

After you shut down the inverter, the UPS supplies no power if the bypass is abnormal, which causes a power failure for the loads.

Figure 4-28 Abnormal bypass

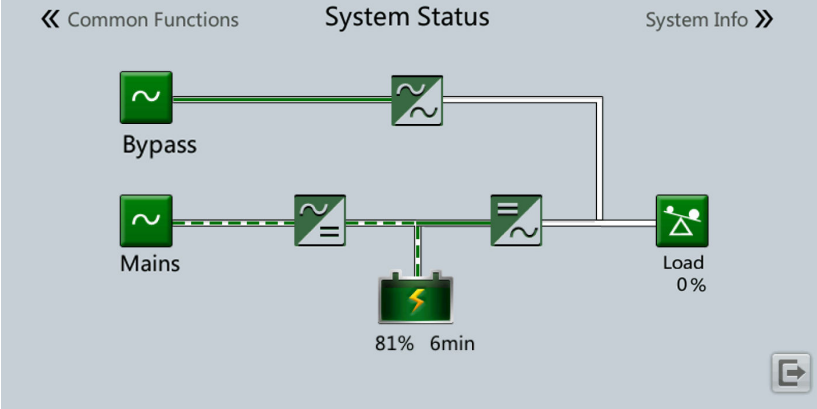

NOTE

To shut down the inverter and transfer the system to bypass mode, check that the UPS has not generated an alarm and perform **Step 1**.

Step 2 After the inverter shuts down, turn off the downstream output switch.

Step 3 Switch off the battery string circuit breaker. If there are multiple battery strings, switch off the general circuit breaker between battery strings and the UPS and then switch off the circuit breaker for each battery string.

Step 4 For a UPS in full configuration:

1. Turn off the mains input switch, bypass input switch, and output switch of the UPS.
2. Turn off the upstream mains input and bypass input switches.

Step 5 For a UPS in standard configuration, turn off the upstream mains input and bypass input switches.

----End

5 Parallel System Commissioning

DANGER

Wear personal protective equipment and use dedicated insulated tools to avoid electric shocks or short circuits.

5.1 Starting a Parallel System for the First Time

Prerequisites

CAUTION

- Before starting a parallel system, ensure that each UPS has been commissioned (see **4.1 Powering On and Starting the UPS**).
- If you commission the parallel system where UPSs are not powered off after they are commissioned individually, skip **Step 3**. In addition, ensure that **Step 1** is performed before commissioning a single UPS.
- Ensure that all load circuit breakers in the system are OFF. Do not start loads before the parallel system is started.
- Before connecting parallel cables, if you turn on the external output power switch of the rack by mistake, the system may report alarm **0570-002 BPM unit abnormal**. In this case, you need to power off the rack to clear the alarm.

 Copyright © Huawei Digital Power Technologies Co., Ltd.

Figure 5-1 Conceptual diagram (using two parallel UPSs as an example)

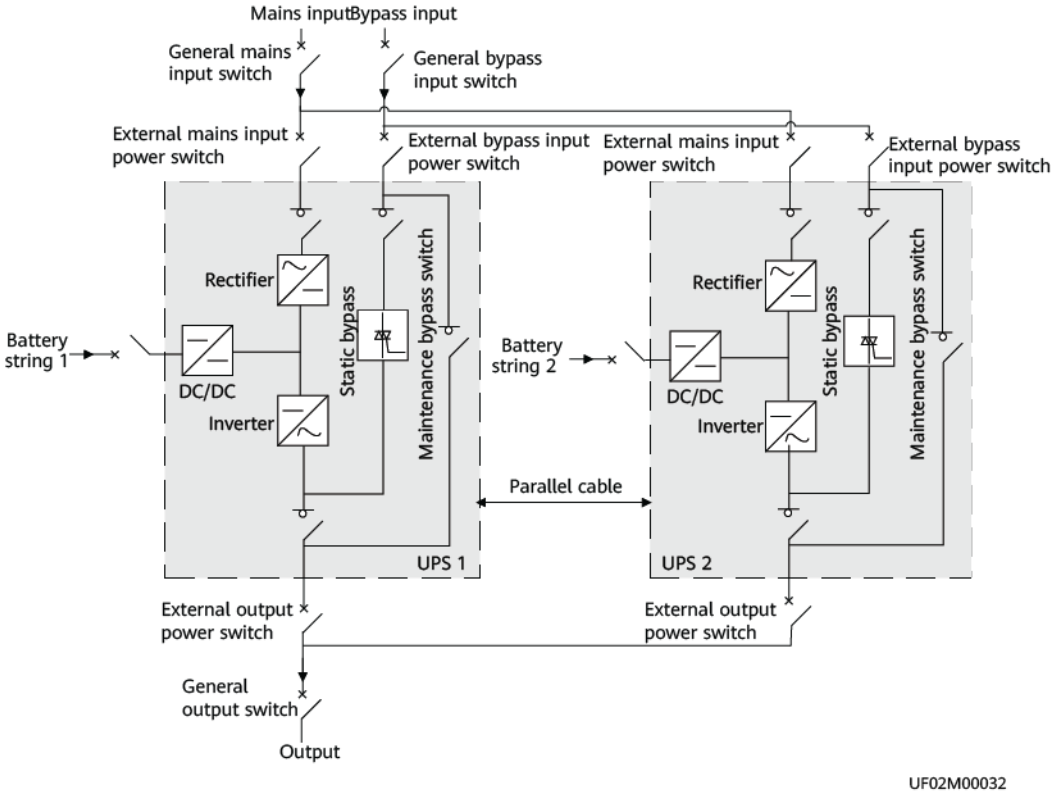

Procedure

Step 1 Check before power-on: Ensure that the mains input, bypass input, and AC output cables of each UPS in the parallel system are connected in the same phase sequence.

1. Check that the general mains input, bypass input, and output circuit breakers are OFF.
2. Check that the power cables of UPSs are connected in parallel (the external mains input, external bypass input, and external output power switches for each UPS are ON).
3. Use a multimeter to measure the impedance between phases A, B, and C of the mains/bypass input and AC output of any UPS. If the measured result is low conducted resistance, check whether the cables to each UPS are short-circuited.
4. Use a multimeter to measure the impedance between phases A, B, and C of the mains/bypass input and AC output of any two UPSs. If the measured result is low conducted resistance, check whether the mains/bypass input and AC output phase sequences of the two UPSs are correct.

Step 2 (Optional) Activate the EPO on each UPS.

1. On the WebUI of each UPS, choose **Monitoring > UPS System > Running Parameter > System Settings**, and set **EPO detection** to **Enable**.
2. Press the EPO switches connected to the dry contact cards of all UPSs one by one, or remove the 4-pin terminals from the EPO ports on the dry contact cards of all UPSs, or press the general EPO switch.

NOTE

The EPO on each UPS is not activated: If the parallel parameters have not been set for the UPS being commissioned and working in normal mode, the output switch of a parallel UPS is turned on by mistake, and other UPSs work in bypass mode, the bypass of the UPSs will back feed the UPS under commissioning. As a result, system overvoltage occurs or the upstream switch trips.

Step 3 Power on the parallel system.

1. Turn off the external output power switch for each UPS to ensure that the UPS outputs are independent of each other.
2. Turn on the general bypass and mains input switches.
3. Turn on the internal bypass input switch of each UPS.
4. Turn on the internal output switch of each UPS.
5. Turn on the internal mains input switch of each UPS.

If the input power is normal, the rectifier starts automatically. The MDU starts and displays the progress bar. Wait until the MDU starts properly.

NOTE

If you turn on the internal input switch prior to the internal output switch, an alarm indicating neutral wire missing may be generated. This alarm is normal and does not need to be handled before the mains input switch is turned on.

Step 4 Check that the software versions of all UPSs are consistent.

On the LCD of each UPS, choose **System Info** > **About** > **Version Info** and check whether all software versions are consistent. If not, update all software versions to be consistent.

Step 5 Set parallel parameters for each UPS.

1. System settings: On the LCD, choose **System Info** > **Settings** > **System Settings**. On the WebUI, choose **Monitoring** > **UPS System** > **Running Parameter** > **System Settings**.

Table 5-1 System settings

Item	Setting	Description
Single/Parallel	Parallel	-
Parallel ID	Number UPSs in sequence (example: 1, 2, 3, 4).	-
Requisite UPSs	Sets it based on the actual number of UPSs.	– In a parallel system, the two parameters must be set to the same values for all UPSs. – The total number of UPSs in a parallel system is the sum of **Requisite UPSs** and **Redundant UPSs**.
Redundant UPSs	Sets it based on the actual number of UPSs.	

2. Battery settings: On the LCD, choose **System Info** > **Settings** > **Battery Settings**. On the WebUI, choose **Monitoring** > **Battery System** > **Running Parameter** > **Battery Settings**.

Table 5-2 Battery settings

Item	Setting	Description
Battery string sharing	Set this parameter as required.	If the parallel system shares one battery string, set this parameter to **Enable**. If each UPS uses an independent battery string, set this parameter to **Disable**.

NOTE

The system may generate alarms such as **Rack quantity mismatch**, **Inter-rack par. cable alarm**, and **Intra-rack par. cable abnormal**. The alarms are automatically cleared after you connect all parallel cables.

Step 6 Install parallel cables between parallel cabinets.

Figure 5-2 Installing parallel control cables (using four parallel UPSs as an example)

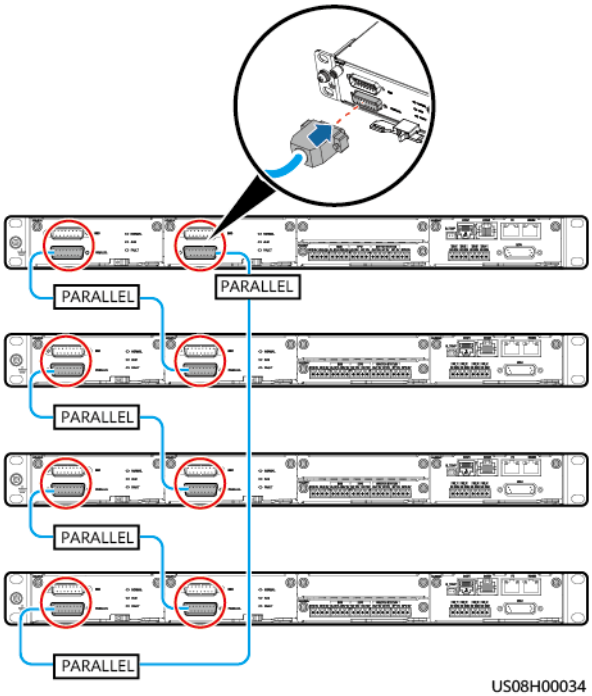

Step 7 Synchronize parallel parameters.

1. If the **Inconsistent parallel param.** alarm is generated, choose **System Info** > **Settings** on the LCD and tap **Parameter Sync** to synchronize parameters between UPSs in the parallel system.

2. Check that no alarm is generated for any UPS and perform subsequent operations. If an alarm is generated, follow the troubleshooting suggestion to clear the alarm first.

Step 8 (Optional) Clear the EPO on each UPS. For details, see **8.7 Clearing the EPO State**.

CAUTION

- If the EPO on each UPS is activated in **Step 2**, clear the EPO state for each UPS.
- If the EPO function is not used, choose **Monitoring** > **UPS System** > **Running Parameter** > **System Settings** and set **EPO detection** to **Disable** on the WebUI of each UPS after the parallel system commissioning is complete.

Step 9 Measure the output voltage of each UPS.

1. Check that no **Bypass abnormal** alarm is generated for any UPS in the system. Then, all UPSs in the system supply power in bypass mode.
2. Turn on the external output power switch for any UPS.
3. Set the multimeter to the AC voltage position, connect the black probe to the output phase A of the external output power switch of the UPS, and connect the red probe to the input phase A of the external output power switches of other UPSs to measure the output voltage differences between UPSs. Perform the same operations on phases B and C. Complete the measurement between the external output power switches of every two UPSs in the parallel system. If the phase sequence is correct and the voltage difference is less than 5 V, perform the subsequent operations. If the phase sequence is incorrect or the voltage difference for a phase between the external output switches of any two UPSs is greater than 5 V, power off the parallel system completely, and check whether the output cables for the UPS parallel system are properly connected.

CAUTION

Exercise caution when performing operations with power on. There are many electrified parts in the UPS wiring area. It is recommended that the test be performed in the external power distribution area of the UPS.

Step 10 Turn on the external output power switch for each UPS.

Check that no alarm is generated for any UPS, and then turn on the external output power switch for each UPS.

Ensure that the output switch on each UPS is ON and the load switch is OFF.

Step 11 Tap **Single Inv. ON** on the **Common Functions** screen and check that all UPSs transfer to normal mode.

NOTE

After you tap **Single Inv. ON** for one UPS, the UPS will transfer to normal mode. The UPSs whose inverters are not started will generate a **No power supplied** alarm, which will disappear after their inverters are started.

Step 12 Connect batteries to the parallel system.

1. Check that no alarm except the **No battery** alarm is displayed on the LCD of each UPS.
2. Turn on the battery input switch for each UPS. (If there are multiple battery strings, turn on the switch of one battery string, measure the voltage where the general battery switch is located, and then turn off the switch of the battery string. Perform the same operations on other battery strings to measure the voltage of each battery string. If the measurement results are consistent, turn on the switch of each battery string one by one, and then turn on the general switch between the battery strings and the UPS.)
3. Ensure that batteries are properly connected (the **No battery** alarm in the active alarm list of all LCDs disappears within 2 minutes and no other alarms are generated).

Step 13 Turn on the general output switch (general load switch).

NOTE

- In a parallel system, it is recommended that all racks have the same capacity. When the system is unloaded, the load rate is displayed on the LCD of the UPS that starts first. The load rate is not displayed after all UPSs start.
- If you connect UPSs in parallel for the first time, perform all the preceding steps. If you need to restart the inverters after the parallel system powers off or if the parallel system needs to transfer from bypass mode to inverter mode, you only need to tap **Paral. Inv. ON** on the LCD screen **Common Functions**.

----End

5.2 Starting the Inverters in a Parallel System

Starting the Inverter on the LCD

Step 1 Choose **Common Functions** > **Paral. Inv. ON** or **System Info** > **Maintenance** > **Parallel Inv. ON**.

Step 2 In the displayed dialog box, tap **Yes** to start the inverter.

----End

Starting the Inverter on the WebUI

Step 1 Choose **Monitoring** > **UPS System** > **Running Control**, and click **Paral. Inv. ON**.

Step 2 In the dialog box that is displayed, click **OK** to confirm the startup.

Step 3 In the displayed dialog box, enter **Login User Password** and click **Submit**.

Step 4 In the displayed dialog box, click **OK** to start the inverter.

NOTE

If the power module receives a startup command when it cannot be started, the startup command will be retained for 1 minute. Within 1 minute, if there is no situation (for example, the power module encounters other faults, executes a shutdown command, or performs fault clearance) that requires the startup command to be cleared and the power module becomes able to start, then the power module responds to the startup command.

----End

5.3 Shutting Down and Powering Off a Parallel System

Context

NOTICE

After the inverter is shut down, if the bypass is normal, the UPS transfers to bypass mode; if the bypass is abnormal, the UPS supplies no power. Before shutting down the UPS, ensure that the loads have been shut down and a power outage at any time is allowed.

Procedure

Step 1 Shut down the inverter.

- Shutting down the inverter on the LCD
  a. Choose **Common Functions** > **Paral. Inv. OFF** or **System Info** > **Maintenance** > **Parallel Inv. OFF**.
  b. In the displayed dialog box, tap **Yes** to shut down the inverter.
- Shutting down the inverter on the WebUI
  a. Choose **Monitoring** > **UPS System** > **Running Control**, and click **Paral. Inv. OFF**.
  b. In the dialog box that is displayed, click **OK** to confirm the shutdown.
  c. In the displayed dialog box, enter **Login User Password** and click **Submit**.
  d. In the displayed dialog box, click **OK** to shut down the inverter.

Step 2 Turn off the general output switch (general load switch) and the external output power switch, battery switch, external mains input power switch, and external bypass input power switch for each UPS.

Step 3 Turn off the internal bypass input switch, output switch, and then mains input switch of each UPS.

NOTE

- Perform only **Step 1** if you only need to shut down the UPS inverters to switch the system to bypass mode without powering off loads.
- If you need to power off the entire UPS system, perform all the preceding steps.

----End

5.4 Performing EPO

Context

Choose **Monitoring** > **UPS System** > **Running Parameter** > **System Settings** on the WebUI and set **EPO detection** to **Enable**.

NOTICE

- After you press the EPO button, the UPS supplies no power, and the loads powers off.
- If the UPS is in maintenance bypass mode, the UPS still supplies power after you press the EPO button.

Procedure

Step 1 Press the EPO buttons connected to the dry contact cards on all UPSs one by one or press the general EPO button. All UPSs enter the EPO state.

----End

5.5 Commissioning a Dual-Bus System

Context

The dual-bus system consists of one master BSC system and one slave BSC system. You can specify them (one UPS system cannot be set to both master and slave BSC systems) during startup, and change the settings under the guidance of maintenance engineers when needed. Set the master and slave BSC systems to master and slave modes respectively.

Procedure

Step 1 Connect BSC cables.

 Copyright © Huawei Digital Power Technologies Co., Ltd.

Figure 5-3 Connecting signal cables in a dual-bus system

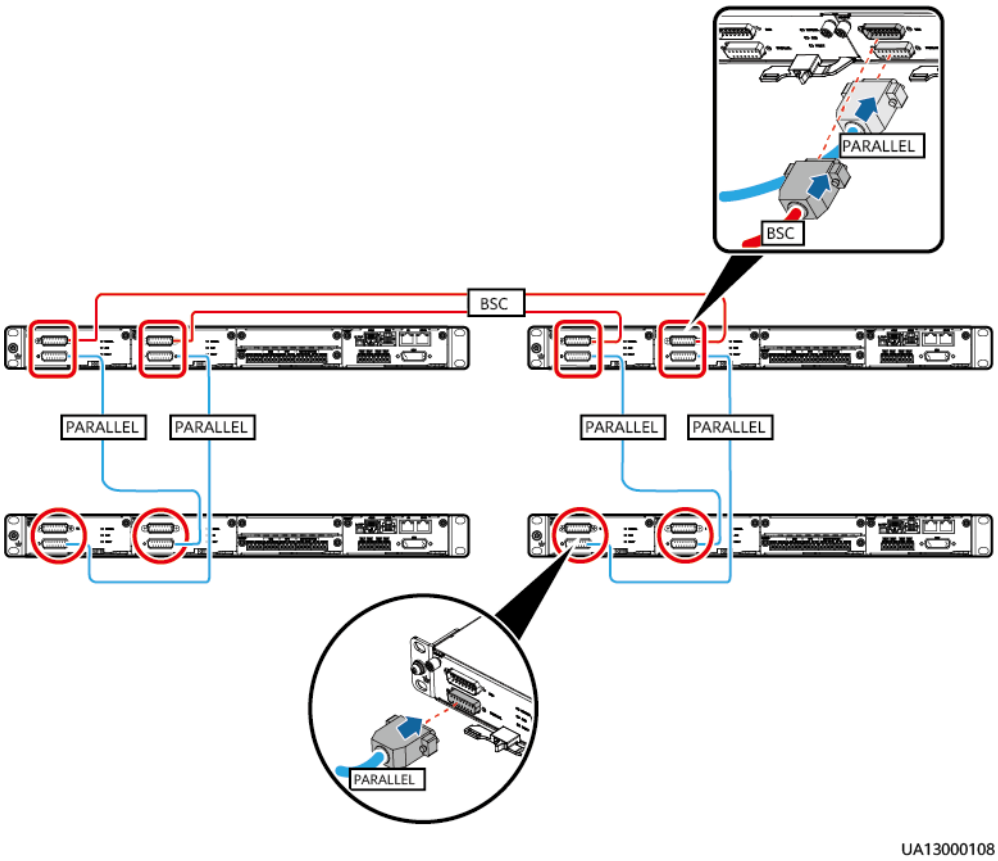

Step 2 Commission the UPSs.

- If the dual-bus system consists of single UPS systems, commission each UPS. For details, see **4.1 Powering On and Starting the UPS**.
- If the dual-bus system consists of parallel systems, commission each independent parallel system. For details, see **5.1 Starting a Parallel System for the First Time**.

Step 3 Set each UPS in the system that is defined as the master system to BSC master system.

1. On the LCD, choose **System Info** > **Settings** > **System Settings** and set **BSC mode** to **Standard BSC**.
2. On the LCD, choose **System Info** > **Settings** > **System Settings** and set **BSC master/slave mode** to **BSC master system**.

Step 4 Set each UPS in the system that is defined as the slave system to BSC slave system.

1. On the LCD, choose **System Info** > **Settings** > **System Settings** and set **BSC mode** to **Standard BSC**.
2. On the LCD, choose **System Info** > **Settings** > **System Settings** and set **BSC master/slave mode** to **BSC slave system**.

Step 5 Check that the RMS phase voltage difference between UPS systems is less than 5 V.

----End

6 Maintenance

DANGER

Before operations, remove conductive objects such as watches, bracelets, bangles, rings, and necklaces to prevent electric shocks.

DANGER

During operations, use dedicated insulated tools to prevent electric shocks or short circuits. The insulation and voltage resistance must comply with local laws, regulations, standards, and specifications.

DANGER

Do not use open flames near the equipment.

DANGER

Do not use wet cloth to clean exposed copper bars or other conductive parts.

DANGER

Do not use water or any solvent to clean the equipment.

DANGER

Do not remove the safety valve or fill anything into batteries.

 Copyright © Huawei Digital Power Technologies Co., Ltd.

WARNING

During operations, wear personal protective equipment such as protective clothing, insulated shoes, goggles, safety helmets, and insulated gloves.

WARNING

Do not place any objects on the top of batteries.

WARNING

After batteries are discharged, charge them in time to avoid damage due to overdischarge.

CAUTION

Before powering off the equipment, ensure that the loads are not affected or obtain written consent from the customer.

NOTICE

- If a fault persists after troubleshooting, contact technical support without any delay.
- When moving batteries, do not place batteries upside down. Handle them gently, and pay attention to personal safety.
- Keep the battery switch off when installing or replacing batteries.

 Copyright © Huawei Digital Power Technologies Co., Ltd.

6.1 UPS Maintenance

Operating Environment Checklist

No.	Check Item	Acceptance Criteria	Check Method and Troubleshooting	Check Interval
1	Equipment room environment	• The fireproof door of the equipment room remains closed, and the air conditioner works normally without interruption. • The equipment room is airtight, and the equipment is not in a direct ventilation environment. • There is no dust or flammable sundries in the equipment room.	• Check method: visual inspection • Troubleshooting: Rectify the fault based on the acceptance criteria.	Monthly
2	Rodent-proof	Rodent-proof measures are taken in the equipment room, such as rat guard and rat trap.	• Check method: visual inspection • Troubleshooting: Rectify the fault based on the acceptance criteria.	Monthly
3	Heat dissipation space	The distance between the equipment and surrounding objects meets the clearance requirements.	• Check method: Measure using a measuring tape. • Troubleshooting: Rectify the fault based on the acceptance criteria.	Monthly
4	Installation position	There is no air outlet or refrigerant copper pipe of the air conditioner placed above the equipment, and no other water leakage risks exist.	• Check method: visual inspection • Troubleshooting: Rectify the fault based on the acceptance criteria.	Monthly
5	Ambient temperature	Actual temperature: _____ °C (Allowed temperature: 0°C to 40°C; recommended temperature: 20°C to 25°C)	• Check method: Measure using a hygrothermograph. • Troubleshooting: Check that the air conditioner runs properly.	Monthly

No.	Check Item	Acceptance Criteria	Check Method and Troubleshooting	Check Interval
6	Ambient humidity	Actual humidity: _____% RH (Allowed humidity: 0%–95% RH, non-condensing; recommended humidity:10%–75% RH, non-condensing)	• Check method: Measure using a hygrothermograph. • Troubleshooting: Check that the air conditioner runs properly.	Monthly

Product Component Checklist

No.	Check Item	Acceptance Criteria	Check Method and Troubleshooting	Check Interval
1	Installation	The equipment is installed properly and arranged neatly, and screws are tightened.	• Check method: visual inspection • Troubleshooting: Rectify the fault based on the acceptance criteria.	Monthly
2	Appearance	• Wipe the device surface using a white paper and the paper does not turn black. • The equipment is not rusty or deformed.	• Check method: visual inspection • Troubleshooting: Rectify the fault according to the acceptance criteria. Clean up the dust on the air filter or replace the air filter during dust removal.	Quarterly
3	Cabinet cable hole protection	The cable holes of the cabinet have been fully sealed using the standard sealing plates, and rodent-proof measures are taken.	• Check method: visual inspection • Troubleshooting: Rectify the fault based on the acceptance criteria.	Quarterly
4	Air outlet	The air outlet is not blocked.	• Check method: visual inspection • Troubleshooting: Rectify the fault based on the acceptance criteria.	Quarterly

 Copyright © Huawei Digital Power Technologies Co., Ltd.

No.	Check Item	Acceptance Criteria	Check Method and Troubleshooting	Check Interval
5	Metal scraps in the cabinet	There is no copper scrap or other foreign matter in the cabinet.	• Check method: visual inspection • Troubleshooting: Rectify the fault based on the acceptance criteria.	Quarterly
6	Ground cable	The ground cable is reliably connected to the ground bar in the equipment room, and the screws are tightened.	• Check method: visual inspection • Troubleshooting: Tighten the screws.	Yearly
7	Through-current capacity	Switches and cables meet load requirements. The through-current capacity of cables is greater than the switch specifications.	• Check method: visual inspection • Troubleshooting: After the equipment is powered off, replace the switches or cables.	Yearly
8	Surge protection	The surge protection module in the upstream power distribution frame for the UPS runs properly.	• Check method: visual inspection • Troubleshooting: Power off the equipment and replace the surge protection module.	Yearly
9	Power cable	• The cables and insulation layer are intact. • The screws at the cable connection points are tightened, and the tightening marks on the screws do not deviate. • The cable connections are free from black marks and noticeable sparks.	• Check method: visual inspection • Troubleshooting: After the equipment is powered off, replace the cables or tighten the screws.	Yearly
10	Signal cable	• The cables and insulation layer are intact. • Signal cable terminals are securely connected.	• Check method: visual inspection • Troubleshooting: Replace the cables or secure the terminals.	Yearly

 Copyright © Huawei Digital Power Technologies Co., Ltd.

Running Status Checklist

No.	Check Item	Acceptance Criteria	Check Method and Troubleshooting	Check Interval
1	Power grid	• Input voltage: – 0°C to 30°C: 323 V AC to 485 V AC (line voltage) – 30°C to 40°C: 342 V AC to 485 V AC (line voltage) • Output voltage: 380 V AC/400 V AC/415 V AC (tolerance: ±1%, line voltage) • Input frequency: 40–70 Hz	• Check method: Visually check the running information on the LCD. • Troubleshooting: – If the input voltage is abnormal, check the power grid status or correct the input cable connection. – If the output voltage is abnormal, check the alarm information on the LCD and rectify the fault.	Monthly
2	Working status	The status icons on the LCD indicate that all units are operating properly, all operating parameters are within their normal ranges, and no fault or alarm information is displayed.	• Check method: Visually check the system status on the LCD. • Troubleshooting: View the alarm information on the LCD and handle the alarm.	Monthly
3	Parameter settings	The configuration of the output voltage grade, frequency, number of batteries, and battery capacity meets requirements.	• Check method: visual inspection • Troubleshooting: Correct the parameter settings.	Quarterly
4	Status record	The three-phase load rate and output power factor are recorded.	• Check method: Visually check the system status on the LCD. • Troubleshooting: Equalize the three-phase loads.	Quarterly

 Copyright © Huawei Digital Power Technologies Co., Ltd.

6.2 Lead-Acid Battery Maintenance

Operating Environment Checklist

No.	Check Item	Acceptance Criteria	Check Method and Troubleshooting	Check Interval
1	Equipment room environment	• The fireproof door of the equipment room remains closed, and the air conditioner works normally without interruption. • There is no dust or flammable sundries in the equipment room.	• Check method: visual inspection • Troubleshooting: Rectify the fault based on the acceptance criteria.	Monthly
2	Rodent-proof measures	Rodent-proof measures are taken in the equipment room, such as rat guard and mouse trap.	• Check method: visual inspection • Troubleshooting: Rectify the fault based on the acceptance criteria.	Monthly
3	Installation position	There is no air outlet or refrigerant copper pipe of the air conditioner placed above the equipment, and no other water leakage risks exist.	• Check method: visual inspection • Troubleshooting: Rectify the fault based on the acceptance criteria.	Monthly
4	Ambient temperature	Actual temperature: _____ °C (Allowed temperature: 20°C to 30°C; recommended temperature: 25°C)	• Check method: Measure using a hygrothermograph. • Troubleshooting: Check that the air conditioner runs properly.	Monthly
5	Ambient humidity	Actual humidity: _____% RH (5%–95% RH, non-condensing)	• Check method: Measure using a hygrothermograph. • Troubleshooting: Check that the air conditioner runs properly.	Monthly

 Copyright © Huawei Digital Power Technologies Co., Ltd.

Product Component Checklist

No.	Check Item	Acceptance Criteria	Check Method and Troubleshooting	Check Interval
1	Installation	The equipment is installed properly and arranged neatly, and screws are tightened.	• Check method: visual inspection • Troubleshooting: Rectify the fault based on the acceptance criteria.	Monthly
2	Appearance of the battery rack or cabinet	No dust, rust, or deformation exists.	• Check method: visual inspection • Troubleshooting: Rectify the fault based on the acceptance criteria.	Monthly
3	Battery appearance	• Batteries are clean and free from stains. • Battery wiring terminals are intact. • Batteries are intact and free of damage, deformation, bulges, and cracks. • Batteries have no acid or electrolyte leakage. (If electrolyte leakage occurs, there will be a pungent smell.)	• Check method: visual inspection • Troubleshooting: Contact technical support.	Monthly
4	Metal scrap	There is no copper scrap or other conductive foreign matter.	• Check method: visual inspection • Troubleshooting: Rectify the fault based on the acceptance criteria.	Monthly
5	Ground cable of the battery rack or cabinet	• The ground cable is reliably connected to the ground bar in the equipment room, and the screws are tightened. • Use a voltmeter to check whether the ground cable is reliably connected.	• Check method: visual inspection • Troubleshooting: After the equipment is powered off, replace the cables or tighten the screws.	Yearly

No.	Check Item	Acceptance Criteria	Check Method and Troubleshooting	Check Interval
6	Battery cables	• The cables and insulation layer are intact. • The screws at the cable connection points are tightened, and the tightening marks on the screws do not deviate. • The cable connections are free from black marks and noticeable sparks.	• Check method: visual inspection • Troubleshooting: After the equipment is powered off, replace the cables or tighten the screws.	Quarterly
7	Battery connection reliability	• After the equipment is powered off, check the reliability of each connection point from positive terminals to negative terminals. All points are connected reliably. • In copper bar check, use a torque wrench to check the tightening torque for each battery screw. The torque meets the requirements of the battery manufacturer. After checking that the battery screws meet the requirements, mark the screws for later check.	• Inspection method: (1) Visual inspection. (2) After the device is powered off, use an insulated torque wrench to verify the torque of screws. • Troubleshooting: Rectify the fault based on the acceptance criteria.	Yearly

Running Status Checklist

No.	Check Item	Acceptance Criteria	Check Method and Troubleshooting	Check Interval
1	Working status	The UPS LCD shows that all batteries are running properly, battery running parameters are within their normal ranges, and no battery fault or alarm information is displayed.	• Check method: Visually check the system status on the UPS LCD. • Troubleshooting: View the alarm information on the LCD and handle the alarm.	Monthly
2	Battery temperature sensor precision	The deviation between the detected temperature and the displayed temperature is less than 3°C.	• Check method: Measure using a hygrothermograph. • Troubleshooting: Correct the installation position of the battery temperature sensor, or replace the sensor.	Quarterly
3	Battery management parameters	• Battery management parameter settings and battery charge and discharge conditions meet the requirements of the battery manufacturer. • The battery operating temperature is lower than the ambient temperature plus 20°C.	• Check method: Visually check the parameters on the UPS LCD. • Troubleshooting: Correct the parameter settings or rectify battery operating temperature abnormality.	Quarterly

 Copyright © Huawei Digital Power Technologies Co., Ltd.

No.	Check Item	Acceptance Criteria	Check Method and Troubleshooting	Check Interval
4	Battery voltage	• Equalized charging voltage: 2.35 V/cell ±0.02 V/cell • Float charging voltage: 2.25 V/cell±0.02 V/cell	• Check method: (1) Visually check the parameters on the UPS LCD. (2) Measure the battery internal resistance using an internal resistance tester. • Troubleshooting: Check the equalized charging voltage, float charging voltage, and internal resistance of a single battery. If the battery charging voltage exceeds the threshold, perform a complete forced equalized charging for the battery string and check the battery string voltage.	Quarterly
5	Battery string voltage	• Equalized charging voltage (2.35 V/cell ±0.02 V/cell) x Voltage of a single battery/2 (Number of cells) x Number of batteries in a battery string • Float charging voltage (2.25 V/cell±0.02 V/cell) x Voltage of a single battery/2 (Number of cells) x Number of batteries in a battery string	• Check method: (1) Visually check the parameters on the UPS LCD. (2) Use a multimeter to measure the output voltage of the battery string. • Troubleshooting: Correct the equalized charging voltage and float charging voltage of the UPS. If the difference between the battery string voltage displayed on the UPS LCD and the measured value is greater than 1%, contact technical support.	Quarterly

 Copyright © Huawei Digital Power Technologies Co., Ltd.

No.	Check Item	Acceptance Criteria	Check Method and Troubleshooting	Check Interval
6	Shallow discharge test (recommended)	During the shallow discharge test, no fault or alarm is displayed on the UPS LCD.	• Check method: Perform a shallow discharge test and check the alarm information on the UPS LCD. Measure and record the voltage of a single battery during shallow discharge. • Troubleshooting: View the alarm information on the LCD of the UPS and handle the alarm. Send the recorded battery voltage and resistance to the battery manufacturer to determine whether the battery is normal.	Quarterly
7	Capacity test (recommended)	During the capacity test, no fault or alarm is displayed on the UPS LCD.	• Check method: Perform a capacity test and check the alarm information on the UPS LCD. • Troubleshooting: View the alarm information on the UPS LCD and handle the alarm.	Yearly

6.3 Lithium Battery Maintenance

For details about lithium battery maintenance, see "Product Maintenance" in *SmartLi Maintenance Guide*.

6.4 Battery Test

6.4.1 Lead-Acid Battery Test

6.4.1.1 Performing a Forced Equalized Charging Test

Context

This item allows you to perform equalized charging on batteries forcibly.

NOTICE

Before performing a forced equalized charging test, ensure that:

- The mains input is normal.
- Batteries are properly connected.
- Batteries are not in equalized charging mode.

Procedure

Step 1 On the home screen of the LCD, choose **System Info** > **Maintenance** > **Battery Maint.**

Step 2 Tap **Start** on the right of **Forced Equalized Charging** to start a forced equalized charging test.

Figure 6-1 Starting a forced equalized charging test

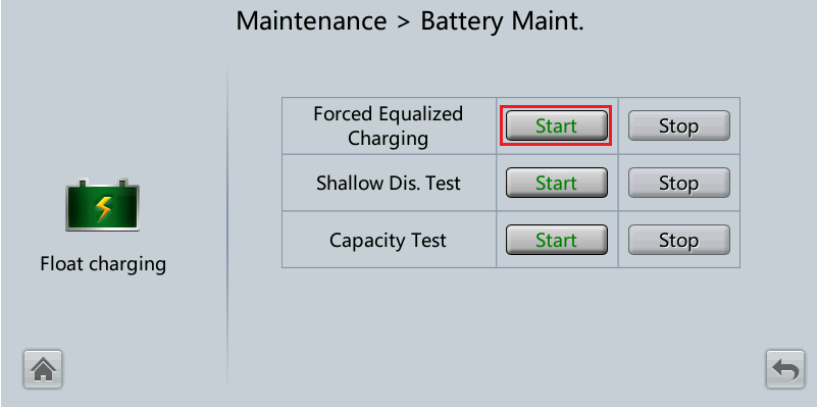

NOTE

The forced equalized charging test automatically stops in any of the following cases:

- The test duration reaches the forced equalized charging protection time (12–24 h, 18 h by default).
- The UPS generates a battery overtemperature, overvoltage, or overcurrent alarm.
- An alarm is generated.

----End

6.4.1.2 Performing a Shallow Discharge Test

This item allows you to partially discharge batteries. A shallow discharge test is conducted to test the battery loop reliability and short-time discharge capacity when the batteries have not been discharged for a long time.

NOTICE

Before performing a shallow discharge test, ensure that:

- If the battery has been replaced, choose **System Info** > **Settings** > **Battery Settings** on the LCD and verify that the value of **Installation time** has been changed based on the actual situation.
- The UPS works in normal mode with a load rate fluctuation less than 10%.
- The UPS does not generate any battery overtemperature, overvoltage, or overcurrent alarm. No generator is connected to the UPS.
- The mains, batteries, charger, and discharger are normal. No overload alarm is generated.
- If the UPS does not communicate with SmartLi 3.0, batteries are managed as lead-acid batteries by default. Because the battery capacity is set to the maximum value on the UPS UI, the battery capacity displayed on the monitoring UI of the SmartLi should be used during a shallow discharge test. Otherwise, batteries may be completely discharged.

Automatic Shallow Discharge Test

Step 1 On the home screen of the LCD, choose **System Info** > **Settings** > **Battery Settings** and set **Sched. shallow dis. test** to **Enable**.

Step 2 Set **Sched. shallow dis. test time** and **Sched. shallow dis. test interval** as required. After setting is complete, the system will perform an automatic shallow discharge test based on the settings.

----End

Manual Shallow Discharge Test

Step 1 On the home screen of the LCD, choose **System Info** > **Maintenance** > **Battery Maint.**

Step 2 Tap **Start** next to **Shallow Dis. Test** to start a shallow discharge test.

Figure 6-2 Starting a shallow discharge test

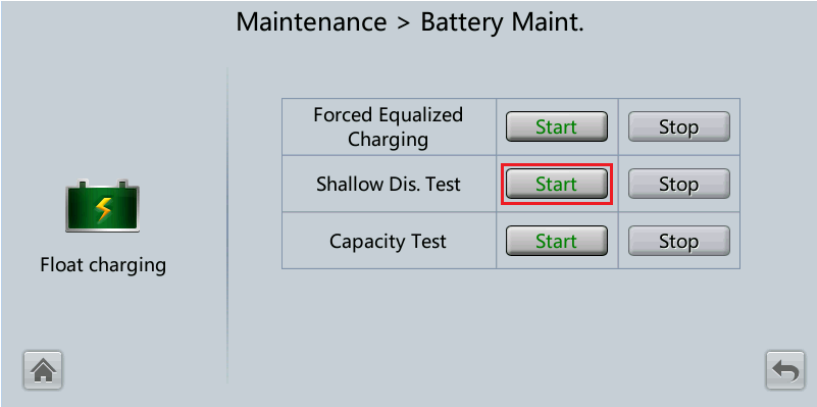

NOTE

When the battery test is completed normally, the test data is used as common test data. Record the data obtained from the latest five tests.

The shallow discharge test automatically stops in any of the following cases:

- The battery discharge capacity reaches the specified value (10%–50%, 20% by default).
- The discharge voltage reaches the warning threshold (calculated in real time).
- The load rate fluctuation exceeds 10%.
- A fault alarm is generated.

----End

6.4.1.3 Performing a Capacity Test

Context

This item allows you to fully discharge batteries. A deep discharge test is conducted to obtain the battery discharge performance data.

NOTICE

Before performing a capacity test, ensure that:

- If the battery has been replaced, choose **System Info** > **Settings** > **Battery Settings** on the LCD and verify that the value of **Installation time** has been changed based on the actual situation.
- The UPS is working in normal mode; float charging or hibernation has lasted for 2 hours after the SOC reaches 100%; the load rate fluctuation is less than 10%.
- The UPS does not generate any battery overtemperature, overvoltage, or overcurrent alarm. No generator is connected to the UPS.
- The mains, batteries, charger, and discharger are normal. No overload alarm is generated.

Procedure

Step 1 On the home screen of the LCD, choose **System Info** > **Maintenance** > **Battery Maint.**

Step 2 Tap **Start** next to **Capacity Test** to start a capacity test.

Figure 6-3 Starting a capacity test

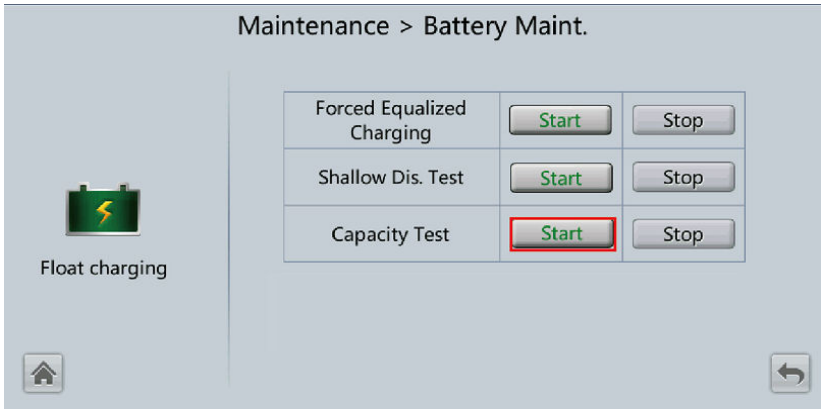

NOTE

The capacity test automatically stops in any of the following cases:

- The battery discharge voltage reaches the EOD voltage plus 0.01 V.
- The load fluctuation exceeds 10%.
- An alarm is generated.

When the battery discharge voltage reaches the EOD voltage plus 0.01 V, the test is complete. The test data is obtained from the capacity test. Based on monthly capacity test data, select the test data obtained from a capacity test that has the maximum discharge capacity as the current-month test data. Save the test data obtained from the latest 36 tests.

----End

6.4.2 Lithium Battery Test

6.4.2.1 Performing a Shallow Discharge Test

This item allows you to partially discharge batteries. A shallow discharge test is conducted to test the battery loop reliability and short-time discharge capacity when the batteries have not been discharged for a long time.

Automatic Shallow Discharge Test

NOTICE

Before the test, ensure that:

- The UPS is working in normal mode; float charging or hibernation has lasted for 2 hours after the SOC reaches 100%; the load rate fluctuation is less than 10%.
- The UPS does not generate any battery overtemperature, overvoltage, or overcurrent alarm. No generator is connected to the UPS.
- The mains, batteries, charger, and discharger are normal. No overload alarm is generated.
- The SmartLi generates no alarms related to lithium batteries.

1. On the home screen of the UPS LCD, choose **System Info** > **Settings** > **Battery Settings** and set **Sched. shallow dis. test** to **Enable**.
2. Set **Sched. shallow dis. test time** and **Sched. shallow dis. test interval** as required. After setting is complete, the system will perform an automatic shallow discharge test based on the settings.

Manual Shallow Discharge Test

NOTICE

Before the test, ensure that:

- The UPS is working in normal mode, the SOC is greater than 95%, the lowest cell voltage is greater than or equal to 3.35 V/cell, and the load rate fluctuation is less than 10%.
- The UPS does not generate any battery overtemperature, overvoltage, or overcurrent alarm. No generator is connected to the UPS.
- The mains, batteries, charger, and discharger are normal. No overload alarm is generated.
- The SmartLi generates no alarms related to lithium batteries.

1. On the home screen of the UPS LCD, choose **System Info** > **Maintenance** > **Battery Maint**.
2. Tap **Start** next to **Shallow Dis. Test** to start a shallow discharge test.

 Copyright © Huawei Digital Power Technologies Co., Ltd.

Figure 6-4 Starting a shallow discharge test

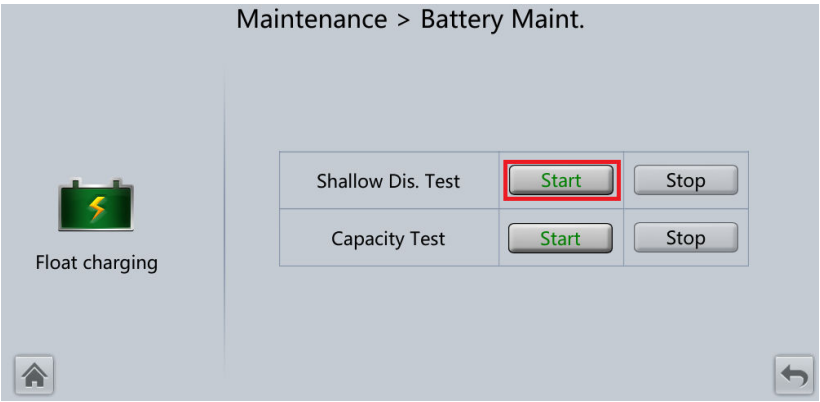

NOTE

- The shallow discharge test automatically stops in any of the following cases:
  - The battery discharge capacity reaches the specified value (10%–50%, 20% by default).
  - The load rate fluctuation exceeds 10%.
  - An alarm is generated.
- When the battery test is completed normally, the test data is used as common test data. Record the data obtained from the latest five tests.

6.4.2.2 Performing a Capacity Test

Context

This item allows you to fully discharge batteries. A deep discharge test is conducted to obtain the battery discharge performance data.

NOTICE

Before performing a capacity test, ensure that:

- The UPS is working in normal mode; float charging has lasted for 2 hours after the SOC reaches 100%; the load rate fluctuation is less than 10%.
- The UPS does not generate any battery overtemperature, overvoltage, or overcurrent alarm. No generator is connected to the UPS.
- The mains, batteries, charger, and discharger are normal. No overload alarm is generated.
- The SmartLi generates no alarms related to lithium batteries.

Procedure

Step 1 On the home screen of the UPS LCD, choose **System Info** > **Maintenance** > **Battery Maint**.

Step 2 Tap **Start** next to **Capacity Test** to start a capacity test.

Figure 6-5 Starting a capacity test

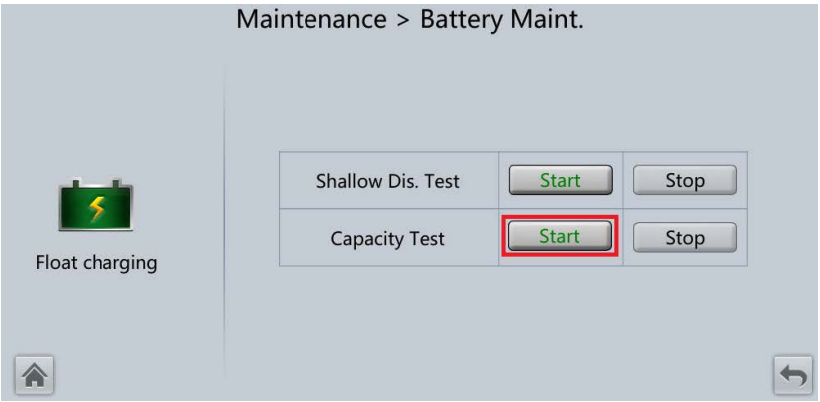

NOTE

- The capacity test automatically stops in any of the following cases:
  - The lowest cell voltage reaches the undervoltage alarm threshold.
  - The load fluctuation exceeds 10%.
  - An alarm is generated.
- The test is complete when the lowest cell voltage reaches the undervoltage alarm threshold. The test data is obtained from the capacity test. Save the test data obtained from the latest 36 tests.

----End

6.4.3 Downloading the Test Data

Procedure

Step 1 On the WebUI, choose **Query** > **Battery Test Records**, choose logs that need to be queried from the **Log** drop-down list box, and click **Query**.

Figure 6-6 Battery Test Records

Step 2 Choose logs that have been queried from the **Log** drop-down list box, and click **Export**.

NOTE

If the UPS does not communicate with SmartLi 3.0, batteries are managed as lead-acid batteries by default and the battery information is subject to the data displayed on the SmartLi or NMS.

----End

7 Troubleshooting

CAUTION

- If the UPS is faulty, alarm information is displayed on the LCD. The UPS can be powered on only after critical alarms are handled. Failing to do so may escalate faults or damage the equipment.
- Do not clear alarms by reseating modules.
- Remove a faulty module after confirming that it needs to be replaced. After removing the module, do not insert it into the UPS again.

NOTICE

- After a UPS finishes troubleshooting and is started, if the LCD continues displaying alarm information, choose **System Info** > **Alarms** > **Clear Faults** to clear the alarm and then start the inverter.
- When batteries reach EOD, the battery switch in the BCB box trips if the BCB box is configured. To restore battery discharge, turn on the battery switch in the BCB box.
- To restore battery discharge after batteries reach EOD, use one of the following methods: 1. Switch to another battery string. Ensure that each battery has a voltage greater than the EOD voltage and 11.3 V/cell. 2. Restore the mains power supply to start the inverter. Turn on the battery switch and charge batteries until each battery has a voltage greater than the EOD voltage and 11.3 V/cell.

For details about how to rectify common faults, see **Table 7-1**. If any unmentioned faults occur, see the alarm list or contact technical support.

 Copyright © Huawei Digital Power Technologies Co., Ltd.

Table 7-1 Troubleshooting

Case	Symptom	Possible Cause	Measure
The rectifier is not normal.	The UPS rectifier cannot work, and the bus voltage is not boosted.	The mains voltage exceeds the upper threshold 280 V or is less than the lower threshold 80 V.	Check whether the mains voltage is beyond the allowed range. If so, contact the electric power company.
		PFC soft-startup fails.	Replace the power module.
		The power module is faulty.	Replace the power module.
The inverter is not normal.	The buzzer is activated, the Fault indicator is on, the inverter is faulty, and the UPS transfers to bypass mode.	Output overload or short-circuit exists.	Reduce the load or troubleshoot the short circuit.
		The power module is faulty.	Replace the power module.
The charger generates an alarm.	The buzzer buzzes, the fault indicator is on, and the charging function fails.	The charger fails.	Replace the power module.
		The charger experiences overcurrent.	Replace the power module.
		The charger experiences undervoltage.	Check whether the configured number of batteries is correct. If the setting is correct but the alarm persists, replace the power module.
The UPS works in bypass mode and does not transfer to inverter mode.	When the mains is normal, the UPS works in bypass mode and does not transfer to inverter mode.	The UPS is set to ECO mode.	Set the working mode correctly.
		The number of bypass transfer times reaches the upper limit.	On the LCD, choose **Clear Faults**.
The bypass is abnormal.	The buzzer buzzes, and the fault indicator is on.	The bypass thyristor is damaged.	Replace the bypass module.

Case	Symptom	Possible Cause	Measure
		The bypass module experiences overtemperature.	Reduce the load, or improve ventilation.

NOTE

For details about component replacement and maintenance involved in Troubleshooting and Alarm List, consult maintenance engineers.

8 FAQs

8.1 Logging In to the WebUI

Step 1 Open a browser (Chrome, Firefox, and Edge are supported). Take Edge as an example. Choose **Settings > Default browser** and set **Allow sites to be reloaded in Internet Explorer mode (IE mode)** to **Allow**.

Step 2 Choose **More tools** > **Internet options**, click the **Advanced** tab, check that **Use TLS 1.2** and **Use TLS 1.3** are selected, and click **OK**.

Step 3 Configure the PC IP address and the UPS IP address in the same network segment.

If the UPS IP address is 192.168.0.10, subnet mask is 255.255.255.0, and default gateway is 192.168.0.1, set the PC IP address to 192.168.0.11, subnet mask to 255.255.255.0, and default gateway to 192.168.0.1.

NOTE

The preset UPS IP address is 192.168.0.10. You can set the UPS Ethernet IP address on the LCD. The value range is 1.0.0.0–223.255.255.255.

Step 4 Enter *https://UPS IP address* in the address box of the browser, select a language, enter **User name** and **Password**, and click **Login**.

Step 5 Change the password as prompted, enter the new password, and click **Login**. The home page is displayed.

NOTE

- Keep the password secure to prevent unauthorized access.
- If an incorrect password is entered five consecutive times, the account will be logged out for 5 minutes.
- If you forgot the password, you will be unable to log in to the WebUI.
- When the outbox is configured under **System Settings** > **Outbox Configuration** and the email address of the user is configured under **Maintenance** > **User Management**, the password can be retrieved.
- You can choose **Maintenance** > **User Management** to change the user password.
- After a user logs in to the WebUI, if another user logs in with the same user name, the current account will be logged out.

----End

8.2 Cold-Starting the UPS Using Batteries

Lead-Acid Battery Cold Start

Step 1 Check that batteries are properly connected. Use a multimeter to measure the voltage of each battery string. The value should be greater than the specified value (Voltage of a single battery x Number of batteries in the battery string).

Step 2 Turn off the mains and bypass input switches in the external input PDC, and switch on the battery circuit breaker. If there are multiple battery strings, switch on the circuit breaker for each battery string and then the general circuit breaker between the battery strings and the UPS.

Step 3 Use a multimeter to measure the voltage of each battery string connected to the UPS. If the voltage is greater than the specified value (Voltage of a single battery x Number of batteries in the battery string), batteries are connected properly.

Step 4 Press and hold down the **BATT START** button on the bypass control module for more than 2 seconds. The system automatically enters the battery cold start state. The MDU displays the initialization progress bar.

Step 5 After the initialization is complete, start the inverter on the LCD.

----End

Lithium Battery Cold Start

Step 1 Check that the cables between the UPS and the lithium battery cabinet are properly connected.

Step 2 Turn off the mains and bypass input switches in the external input PDC.

Step 3 Power on the lithium battery cabinet by referring to the lithium battery cabinet manual.

Step 4 Use a multimeter to measure the voltages of the positive and negative battery strings connected to the UPS battery input terminals. If the measured values are consistent with the voltages displayed on the **System Status** screen of the lithium battery cabinet, the batteries are properly connected.

Step 5 When the green indicator on the battery control unit in the lithium battery cabinet blinks at 1 Hz or is steady on, press and hold down the **BATT START** button on the UPS bypass control module for more than 2 seconds. The system automatically enters the battery cold start state. The MDU displays the initialization progress bar.

Step 6 After the MDU initialization is complete, start the inverter.

----End

 Copyright © Huawei Digital Power Technologies Co., Ltd.

8.3 Transferring to Maintenance Bypass Mode

Context

NOTICE

- You are advised to install a lock on the maintenance bypass switch. The lock core has a diameter of 5–10 mm.
- Strictly observe the following procedure to transfer the UPS to maintenance bypass mode. Otherwise, loads may power off.
- In maintenance bypass mode, the mains supplies power to the loads directly over the maintenance bypass. If the mains is abnormal, the loads may power off.

Procedure

Step 1 Manually switch the UPS to bypass mode.

Step 2 Turn on the maintenance bypass switch.

If the maintenance bypass switch is locked, unlock it first. **Figure 8-1** and **Figure 8-2** show a locked maintenance bypass switch. After you close the maintenance bypass switch, the UPS transfers to maintenance bypass mode. The maintenance bypass switch is OFF by default. To turn on the maintenance bypass switch, rotate it to the ON position, as shown in **Figure 8-3** and **Figure 8-4**.

Figure 8-1 Locked maintenance bypass switch (400 kVA UPS and 500 kVA UPS)

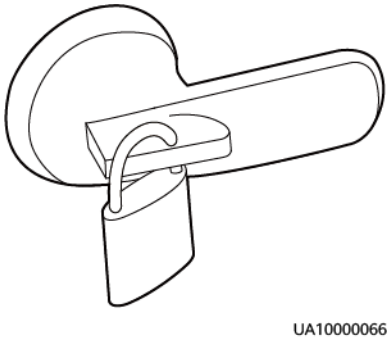

Figure 8-2 Locked maintenance bypass switch (600 kVA UPS)

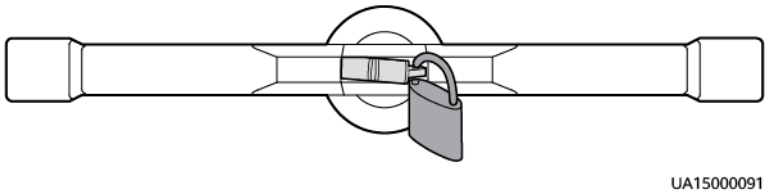

Figure 8-3 Turning on the maintenance bypass switch (400 kVA UPS in full configuration)

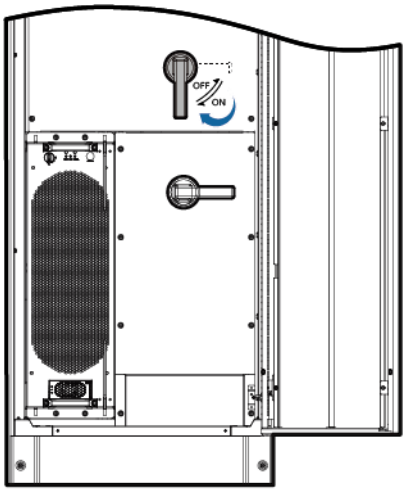

UA13000047

Figure 8-4 Turning on the maintenance bypass switch (600 kVA UPS in standard configuration)

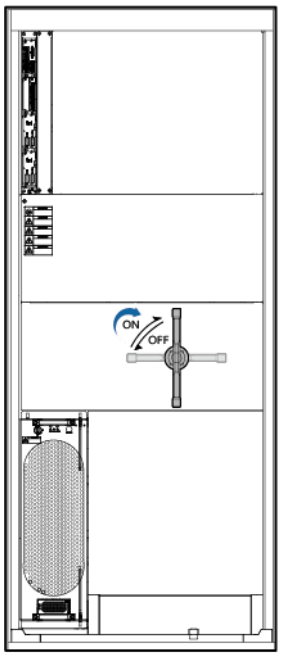

UA15000075

NOTE

- **Figure 8-3** shows how to operate the maintenance bypass switch on a 400 kVA UPS in full configuration. Operate the maintenance bypass switches on a 400 kVA UPS in standard configuration and a 500 kVA UPS in the same way. **Figure 8-4** shows how to operate the maintenance bypass switch on a 600 kVA UPS in standard configuration. Operate the maintenance bypass switches on a 600 kVA UPS in full configuration and an 800 kVA UPS in the same way.
- Exercise force when turning on or off the maintenance bypass switch.

NOTE

After the system transfers to maintenance bypass mode, the **Maint. breaker closed** and **Bypass mode** alarms are displayed on the LCD.

----End

8.4 Transferring from Maintenance Bypass Mode to Normal Mode

Context

NOTICE

Before transferring the UPS from maintenance bypass mode to inverter mode, ensure that the bypass input and output are normal.

Procedure

Step 1 Turn off the maintenance bypass switch.

The **Maint. breaker closed** alarm disappears from the alarm list. View the system running diagram on the LCD or WebUI to check whether the system works in bypass mode.

NOTE

If a lock, stopper, or barrier is configured for the maintenance bypass switch, lock the switch or reinstall the stopper or barrier.

Step 2 Start UPS inverters.

----End

8.5 Transferring to Bypass Mode

NOTICE

Before shutting down the inverter, ensure that the bypass is normal. If the bypass is not normal, after the inverter is shut down, the UPS supplies no power, and the loads shut down.

Shut down the UPS inverter. Shut down the inverter on the LCD or WebUI, and the UPS transfers to bypass mode.

NOTE

If you shut down the inverter when the bypass input voltage or frequency exceeds the specified threshold, the UPS supplies no power, and the loads are powered off.

8.6 Performing EPO

NOTICE

- After the EPO button is turned on, the UPS supplies no power and the loads shut down.
- In maintenance bypass mode, the UPS continues to supply power even after the EPO button is turned on.

Press the external EPO switch that connects to the dry contact card or remove the 4-pin terminal on the EPO port of the dry contact card.

Figure 8-5 EPO ports

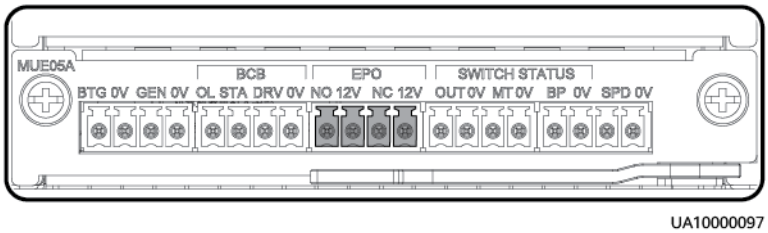

After you press the EPO button, the **EPO** and **No power supplied** alarms are displayed on the LCD.

8.7 Clearing the EPO State

Procedure

Step 1 Clear the EPO state. Ensure that the EPO button connected to the dry contact is not in the EPO state.

Step 2 Clear the EPO alarm in the system.

- On the LCD

  Choose **System Info** > **Alarms** and tap **Clear Faults**. In the displayed dialog box, tap **Yes** to clear the EPO alarm.
- On the WebUI

  Choose **Monitoring** > **UPS System** > **Running Control** and click **Clear Fault**. The EPO alarm is cleared.
- On the old WebUI

  Choose **Monitoring** > **Control** > **System Commands and Tests** and click **Clear Faults**. The EPO alarm is cleared.

Step 3 View active alarms and check that the EPO alarm is cleared. If the system bypass input is normal, the UPS transfers to bypass mode.

- On the LCD

  Choose **System Info** > **Alarms** > **Active Alarms** to check that the EPO alarm has been cleared.
- On the WebUI

  Choose **Home** > **Active Alarm** to check that the EPO alarm has been cleared.
- Viewing active alarms on the old WebUI

  Choose **Monitoring** > **Active Alarms** and check that the EPO alarm has been cleared.

Step 4 Start UPS inverters.

----End

8.8 Exporting Data

The following data can be exported:

- Historical alarms
- Active alarms
- Performance data
- Operation logs

NOTE

This procedure describes how to export historical alarms.

WEB

1. Choose **Query > Export Data > Export Historical Data**. Set **Encryption Password for Export**, and select **Historical Alarm** from the **Data Type** drop-down list.

   Figure 8-6 Exporting historical data

   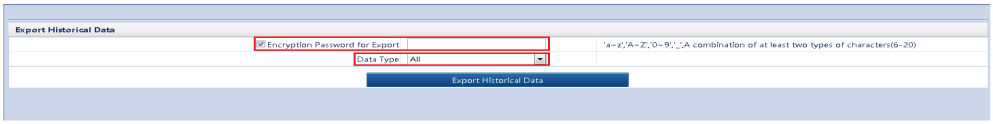

2. Click **Export Historical Data** and save the displayed webpage.

Old WEB

1. Choose **Query** > **Historical Alarms**, set **Severity**, **Generated**, and **Cleared**, and click **Query** to query the historical alarm information.

   Figure 8-7 Querying historical alarms

   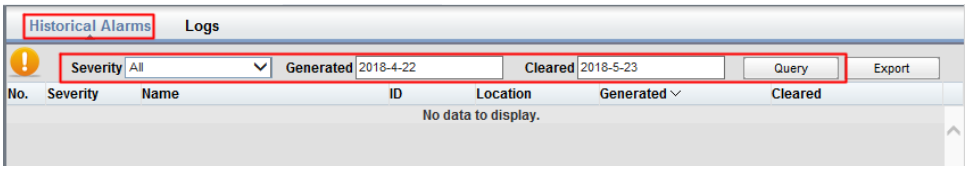

NOTE

You do not need to query logs. You only need to choose **Query** > **Logs**, click **Export**, and save the log file.

2. Click **Export** and save the displayed webpage.

8.9 Obtaining Active Alarm Details

Choose **System Info** > **Alarms** > **Active Alarms** on the LCD, and tap an alarm ID to view the alarm details.

Figure 8-8 Active Alarms

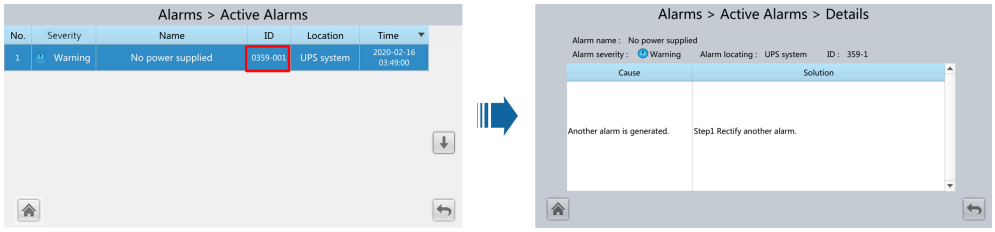

8.10 Spare Parts Authorization

Prerequisites

After an unauthorized module is inserted, an alarm is displayed on the LCD, indicating that the module spare part is unauthorized. You need to authorize the module to clear the alarm.

Context

You can authorize the spare parts of the module to clear the alarm indicating that the spare parts of the module are not authorized.

Procedure

Step 1 On the cabinet LCD screen, choose **System Info** > **Maintenance** > **Spare Parts Authorization**. The **Spare Parts Authorization** screen is displayed.

Step 2 Obtain the authorization code by referring to the deployment guide.

Step 3 On the **Spare Parts Authorization** screen, enter the obtained authorization code in the **Service authorization code** text box to authorize spare parts.

----End

9 Technical Specifications

9.1 Physical Specifications

Item	400 kVA	500 kVA	600 kVA	800 kVA
Cabling mode	Cables are routed from the top or bottom.			
IP rating	IP20 (IP21 can be reached by configuring IP21 components.)			
Dimensions (H x W x D)	2000 mm x 1200 mm x 850 mm		2000 mm x 1400 mm x 850 mm	2000 mm x 2400 mm x 850 mm
Communication	Supports dry contacts, RS485 ports, and FE ports. Supports the Simple Network Management Protocol (SNMP).			
Weight	UPS5000-E-400K-SM: 670 kg UPS5000-E-400K-FM: 710 kg	UPS5000-E-500K-SM: 810 kg UPS5000-E-500K-FM: 830 kg	UPS5000-E-600K-SM: 1040 kg UPS5000-E-600K-FM: 1090 kg	UPS5000-E-800K-SM: 1520 kg UPS5000-E-800K-FM: 1600 kg

9.2 Internal Switch Specifications

UPS	Maintenance Bypass Switch	Mains Input Switch	Bypass Input Switch	Output Switch
UPS5000-E-400k-SM	1000 V AC/630 A/3P	-	-	-
UPS5000-E-400k-FM	1000 V AC/630 A/3P	1000 V AC/800 A/3P	1000 V AC/630 A/3P	1000 V AC/630 A/3P

 Copyright © Huawei Digital Power Technologies Co., Ltd.

UPS	Maintenance Bypass Switch	Mains Input Switch	Bypass Input Switch	Output Switch
UPS5000-E-500k-SM	1000 V AC/800 A/3P	-	-	-
UPS5000-E-500k-FM	1000 V AC/800 A/3P	1000 V AC/1000 A/3P	1000 V AC/800 A/3P	1000 V AC/800 A/3P
UPS5000-E-600k-SM	1000 V AC/1000 A/3P	-	-	-
UPS5000-E-600k-FM	1000 V AC/1000 A/3P	1000 V AC/1250 A/3P	1000 V AC/1000 A/3P	1000 V AC/1000 A/3P
UPS5000-E-800k-SM	1000 V AC/1250 A/3P	-	-	-
UPS5000-E-800k-FM	1000 V AC/1250 A/3P	1000 V AC/1600 A/3P	1000 V AC/1250 A/3P	1000 V AC/1250 A/3P

9.3 Environmental Specifications

Item	Specifications
Operating temperature	0–40°C
Storage temperature	–40°C to +70°C
Relative humidity	0%–95% RH (non-condensing)
Altitude	0–4000 m When the altitude is higher than 2000 m, the power is derated as described in IEC 62040-3. The upper limit of the altitude is 4000 m.

9.4 Safety and EMC

Safety and EMC	Specifications
Safety regulations	EN 62040-1 IEC 62040-1 YD/T 2165

Safety and EMC	Specifications
EMC	EN 62040-2 IEC 62040-2 IEC 61000-2-2 IEC 61000-4-2 IEC 61000-4-4 IEC 61000-4-5 EN 61000-4-3 EN 61000-4-6 IEC 61000-4-8

9.5 Mains Input Electrical Specifications

Item	Specifications
Input system	Three-phase, four-wire, and PE. If current is allowed in the PE wire, input without the N wire is supported.
Rated input voltage	380 V AC, 400 V AC, or 415 V AC (line voltage)
Input voltage	• 80–280 V AC (phase voltage) • At 40°C: The UPS works at full load when the voltage is 187–280 V AC and is derated to 40% load when the voltage is 187–80 V AC. • At 30°C: The UPS works at full load when the voltage is 176–280 V AC and is derated to 40% load when the voltage is 176–80 V AC.
Rated frequency	50 Hz/60 Hz
Input frequency	40–70 Hz
Input PF	• > 0.99 (full load) • > 0.98 (half load)
THDi	• THDi ≤ 3% (full linear load) • THDi ≤ 5% (full non-linear load)
Overvoltage category	OVC II

 Copyright © Huawei Digital Power Technologies Co., Ltd.

9.6 Bypass Input Electrical Specifications

Item	Specifications
Input system	Three-phase, four-wire, and PE
Rated input voltage	380 V AC, 400 V AC, or 415 V AC (line voltage)
Rated frequency	50 Hz/60 Hz
Input frequency	±6 Hz (adjustable, 0.5–6 Hz, ±2 Hz by default)
Input system	The mains input and bypass input can share a power source or use different power sources.
Overvoltage category	OVC II

9.7 Battery Specifications

NOTICE

The UPS supports the SmartLi. For details about related parameters, see the SmartLi user manual.

Item	Specifications
Battery voltage (lead-acid battery)	• 12 V battery: 30–44 batteries. 34 batteries: battery inverter output power is derated to 90%; 32 or 30 batteries: battery inverter output power is derated to 80%. • 2 V battery: 180–264 batteries. 204–214 batteries: battery inverter output power is derated to 90%; 180–204 batteries: battery inverter output power is derated to 80%. • The number of positive and negative battery strings must be the same. **NOTE** • The default number of batteries is 0. Set this parameter based on site requirements. • When the UPS works in normal mode, if the actual load rate exceeds the threshold that could trigger battery derating, an output overload alarm is generated.
Battery management	Intelligent battery management
One-button cold start	In the case of a mains failure, batteries can start the UPS to power loads.

 Copyright © Huawei Digital Power Technologies Co., Ltd.

Item	Specifications
Charger output power	Under rated conditions, the maximum charge power of a module is 5 kW.
Charger current limit	Maximum 10 A for a module
Battery string sharing	Battery string sharing is supported in a parallel system. No battery string is shared by default.
Charging voltage (lead-acid battery) **NOTE** The specifications vary with the UPS model and software version. The actual software interface prevails.	• Equalized charge voltage: 2.3–2.4 V/cell, default: 2.35 V/cell (30–42 batteries) • Equalized charge voltage: 2.3–2.35 V/cell; default voltage: 2.35 V/cell (44 batteries) • Float charge voltage: 2.23–2.3 V/cell; default voltage: 2.25 V/cell (30–44 batteries)
	• Equalized charge voltage: 2.3–2.4 V/cell; default voltage: 2.35 V/cell • Float charge voltage: 2.23–2.3 V/cell; default voltage: 2.25 V/cell

9.8 Output Electrical Specifications

Item	400 kVA	500 kVA	600 kVA	800 kVA
Output system	Three-phase, four-wire, and PE			
Voltage	380 V AC, 400 V AC, or 415 V AC (tolerance ± 1%) (line voltage)			
Frequency	• In normal mode, the mains frequency is synchronous with the bypass input frequency. • In battery mode, the frequency is 50 Hz or 60 Hz (tolerance ±0.05%).			
Total harmonic distortion of output voltage (THDv)	• ≤ 1% (100% linear load) • ≤ 4% (100% non-linear load)			
Output PF	1			
Transfer time	• 0 ms (uninterruptible transfer) • ≤ 20 ms (interruptible transfer)			
Output voltage unbalance	Voltage unbalance: ±3%; phase unbalance: ±2°			

 Copyright © Huawei Digital Power Technologies Co., Ltd.

Item	400 kVA	500 kVA	600 kVA	800 kVA
Overload capability	Inverter overload capability: ● 100% < load ≤ 110%: transfer to bypass mode after 60 minutes or longer ● 110% < load ≤ 125%: transfer to bypass mode after 10 min or longer ● 125% < load ≤ 150%: transfer to bypass mode after 1 min or longer ● Load > 150%: transfer to bypass mode after 200 ms			
	Bypass overload capability: At 40°C: ● 110% load: run for 60 minutes ● 125% load: run for 10 minutes ● 150% load: run for 1 minute ● Load > 150%: run for 100 ms	Bypass overload capability: ● At 30°C, load ≤ 135%: long-time operation ● At 40°C, load ≤ 125%: long-time operation ● Load > 1000%: run for 100 ms	Bypass overload capability: ● At 25°C, load ≤ 125%: long-time operation ● Load > 1000%: run for 100 ms	Bypass overload capability: ● At 30°C, load ≤ 135%: long-time operation ● At 40°C, load ≤ 125%: long-time operation ● Load > 1000%: run for 100 ms
Inverter output short-circuit capability	944 A	1181 A	1417 A	1889 A

NOTE

The overload capability and short-circuit capability are applicable to scenarios when the UPS works in ambient temperatures between 0°C and 40°C.

9.9 System Electrical Specifications

Item	Specifications
Redundancy design	The auxiliary power supplies, centralized controllers, and parallel signals use redundancy design.

Item	Specifications
No-load loss	● 400K/500K/600K: 4.5 kW ● 800K: 5.5 kW
ECO	Supported
Number of parallel UPSs	A maximum of four UPSs can be connected in parallel.
Power distribution system	TN-C, TN-S, TN-CS, TT

A (Optional) TN-C System Application

If the TN-C system is adopted, short-circuit the input N and PE.

NOTE

- Cables are connected in the same way for the 400 kVA UPS, 500 kVA UPS, and 600 kVA UPS. This section describes how to connect cables for the 600 kVA UPS.
- The following cable connections are for reference only.

Figure A-1 Short-circuiting the input N and PE (600 kVA UPS)

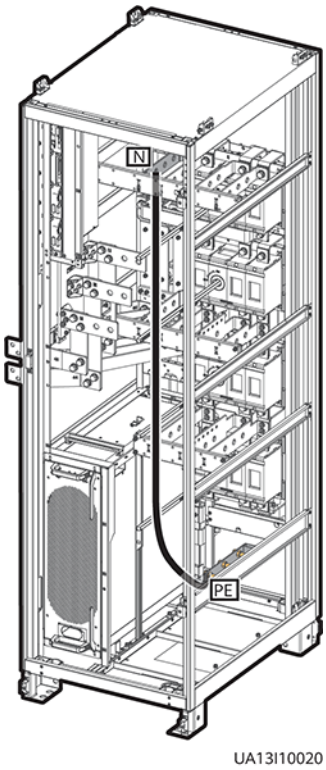

Figure A-2 Short-circuiting the input N and PE (800 kVA UPS)

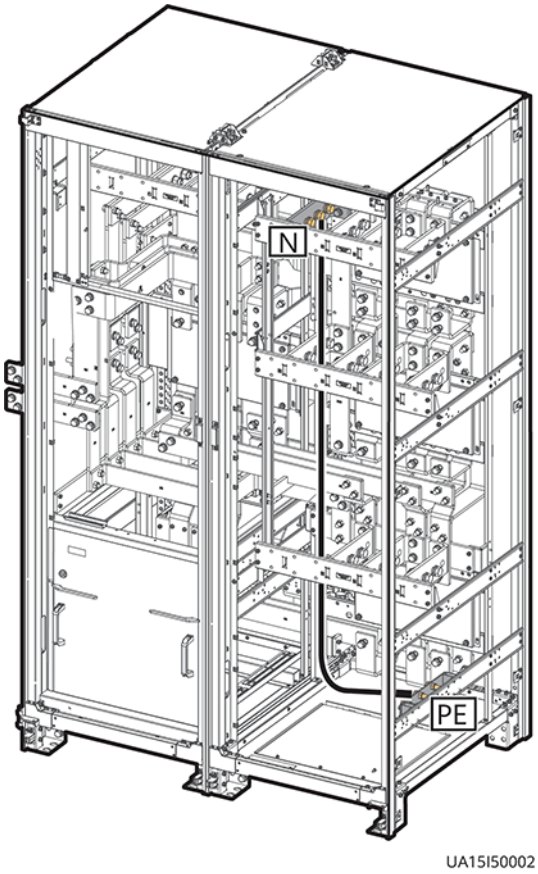

Table A-1 Recommended cross-sectional areas for cables

Model	Current (A)	Recommended Cross-Sectional Area (mm^2)
400 kVA	710.8	240
500 kVA	888.5	240
600 kVA	1066.2	240
800 kVA	1421.6	240

B User Interface

NOTE

For details, see the *UPS5000-E Monitoring Module User Manual*.

C Alarm List

NOTE

For details about alarms, see the *UPS5000 Alarm Reference*.

D Acronyms and Abbreviations

A	
ATS	AC transfer switch
AWG	American wire gauge
B	
BSC	bus synchronization controller
BCB-BOX	battery circuit breaker box
BBB-BOX	battery bus bar box
C	
CE	Conformite Europeenne
D	
DSP	digital signal processing
E	
ECO	economic control operation
EPO	emergency power off
ECM	energy control module

 Copyright © Huawei Digital Power Technologies Co., Ltd.

EOD	end of discharge
I	
IEC	International Electrotechnical Commission
L	
LCD	liquid crystal display
M	
MDU	monitor display unit
P	
PE	protective earthing
PDU	power distribution unit
R	
RS485	Recommended Standard 485
S	
SOC	state of charge
STS	static transfer switch
SNMP	Simple Network Management Protocol
T	
THDi	total distortion of the input current waveform
THDv	total harmonic distortion of output voltage
U	

UPS	uninterruptible power system
USB	Universal Serial Bus
V	
VRLA	valve-regulated lead acid battery