GUTOR PEW AC UPS

Customizable double-conversion UPS system with galvanic isolation supporting long backup times.

Gutor PEW is an industrial online double conversion single-phase UPS system with thyristor-controlled rectifier and IGBT-PWM inverter designed to secure critical applications in harsh environment.

Designed for Harsh Environments

- Transformer base provides full galvanic isolation to prevent electric shock and suppress harmful electrical noise.
- Robust industrial enclosure up to IP42/NEMA 2*.
- Seismic design for peak spectral acceleration up to 1.0 g*.
- Operation temperature up to 55°C.
- Printed circuit boards have conformal coating to protect against moisture, dust, chemicals, and temperature extremes.
- Tinned copper bars for harsh environment are available as an option.

*Higher options available upon request

Highest Reliability

- High Mean Time Between Failures (MTBF).
- Long product lifetime with minimal servicing required.
- Parallel or redundant configuration to increase availability.
- Its controller firmware and hardware are compliant with IEC 60880 for NPP (Nuclear Power Plant) applications.
- Independent System Surveillance (ISS) provides a health supervision of all the critical components to prevent the system from freezing and shutdown.

Adaptable and Qualified Design

- Extensive range of input and output voltage.
- The rectifier is sized to simultaneously supply 100% load and boost charge the battery.
- Strong chargers support various battery types and address long backup time.

Smart Communication

- Display with 7 languages.
- Relay board, 16 fail-safe NO/NC contacts.
- A wide communication protocol allows Gutor PEW to be seamlessly integrated into your monitoring system.
  - Freely programmable alarms and meters.
  - Communication via modbus, TCP/IP, IEC 61850, RS485.
  - Web interface for remote monitoring.
- Gutor PEW supports EcoStruxure.
- Cybersecurity according to IEC 62443 to meet requirements from GPDR and California law SB-327.

GUTOR

Gutor PEW Technical Data

UPS input		
Rectifier input voltage (three-phase)	380 / 400 / 415 / 480 / 600 / 690 (and others)	
Input voltage tolerance DC in tolerance For function	 +/- 10% -15/+10%	
Bypass input voltage Single phase Three phase	 120 / 220 / 230 / 240 (and others) 380 / 400 / 415 / 480 / 600 / 690 (and others)	
Frequency	50/60 Hz +/- 8%	
Inrush current	<10x IN (input current)	
Intermediate DC circuit		
Voltage	110 / 125 / 220 / 400 VDC	
Rectifier voltage tolerance	+/- 1% I-V characteristic	
DC ripple voltage	with battery capacity of 3x nominal current: ≤ 1% rms without battery: ≤ 2% rms, optional without battery: ≤ 1% rms	
Float voltage at -10% line power	100 – 115% programmable	
Boost voltage range at nominal line power	100 – 125% programmable	
Boost charge time	1 – 24 hour programmable	
Charging current limitation	programmable	
Inverter input range (output tolerance +/- 1%)	+20/-15%	
Inverter maximum input range (output tolerance +/- 10%)	+/- 25%	
UPS output		
Nominal UPS Inverter rating	kVA at PF 1.0	
Voltage Single phase	 120 / 220 / 230 / 240 (and others)	
Voltage tolerance Static within 0 – 100% load Dynamic at 100% load surge Regulation time	 +/- 1% +/- 4% <25 ms	
Overload Inverter 1 min Inverter 10 min Bypass 100 ms	105% continuous 150% 125% 1,000%	
Short-circuit inverter 100 ms	200%	
Frequency	50/60 Hz	
Frequency stability, free running	<0.01%	
Synchronization range	0.5/1/2/4/6/8%	
Slew rate single units	0.25/0.5/1/2/4 Hz/s programmable	
Slew rate redundant system	4.0 Hz/s	
Wave form	sinusoidal	
Admissible output crest factor	unlimited	
Distortion factor Linear load Nonlinear load according to IEC 62040-3	 ≤ 3% ≤ 5%	
Allowable power factor	0.4 lag – 0.9 lead	
Fault clearing capability	30% of UPS nom. current rated gG fuse (IEC 60269) within 10 ms and bypass available	
General data	**IEC**	**UL**
Ambient temperature range for storage	from -20 to +70 °C	from -4 to +158 °F
Ambient temperature range for operation	from -10 to +55 °C	from 14 to +131 °F
Altitude above sea level	1,000 m without load de-rating	3,280 ft without load de-rating
Allowable air humidity	<95% (non-condensing)	
Noise level standard n+1 fan system	60 – 75 dBA depending on type	
Degree of protection	IP20 according to IEC 60529	
Paint	light gray, RAL 7035 structure	
Efficiency	up to 91% depending on type	
Cooling	forced ventilation (two speed) with n+1 redundant, monitored fans	
Standards Safety EMC Performance	 IEC/EN 62040-1 IEC/EN 62040-2 IEC/EN 62040-3	 UL 1778 / CSA 22.2-107.3 FCC Part 15 Subpart B, Class A NEMA PE-1
Conformity	CE-Label	
Seismic	up to 1.0 g	
Offer Sustainability	REACH, ROHS (2011/65/EU)	

Highly-Customizable Design and Flexible Configuration

Typical Single-Line Drawing

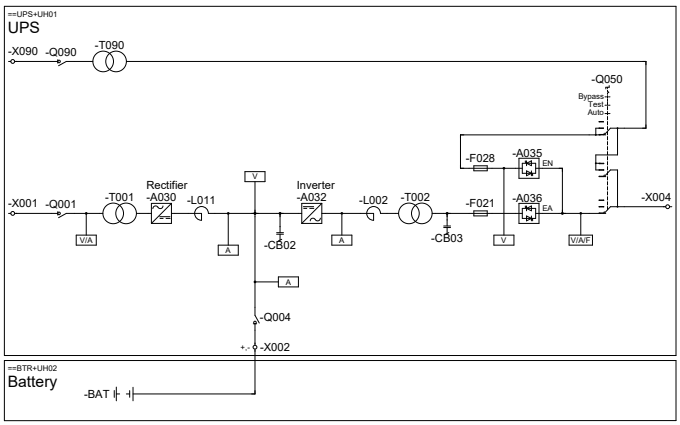

Basic Configuration

- Single UPS
- Rectifier input switch
- Input & output transformers
- Fixed charging voltage IU characteristic
- Thyristor-controlled 6-pulse rectifier (supplies 100% load and charges the battery simultaneously)
- Bypass static switch EN
- Battery-capacity test (full discharge with current load)
- Human-machine interface with additional LEDs for direct alarm display
- Bottom cable entry with ground terminal
- Alarm relays for battery operation, common alarm and others
- N+1 monitored two-speed fans
- Ambient temperature ranges from -10 to +40 °C
- Protection IP20
- Pearl light gray, RAL7035 structure
- Battery MCCB in UPS
- 3-position manual bypass switch

Battery Voltage & UPS Ratings

Voltage (VDC)	110	125	220	400
UPS ratings (kVA)	5	5	5	-
	10	10	10	-
	15	15	15	-
	20	20	20	-
	30	30	30	-
	40	40	40	-
	50	50	50	-
	-	-	60	-
	-	-	80	-
	-	-	100	-
	-	-	-	120
	-	-	-	150
	-	-	-	-
	-	-	-	200
	-	-	-	-

Higher ratings and other voltages on request – single-phase

Power Modules

- Separate power modules for rectifier and inverter
- Modules can be kept on stock for fast servicing
- Monoblock design leading to high MTBF

Wide Range of Battery Supported

- Lead-acid, NiCd, Li-ion and sodium nickel batteries
- Support 110, 220, & 400 battery levels

Transformer Accepting Wide Input Ranges

- Input & output transformers as standard
- Optional bypass transformer

Mechanical Structure

- Flexible configuration
- Up to IP 42 (higher on request)
- Customized cabinet colours
- Seismic design robust cabinet up to 1.0 g (reinforcement upon request)

Optional Features

- Redundant/Parallel Load Sharing Configuration
- Redundant/Parallel Dual Configuration
- Input harmonic filter
- Voltage adaptation for rectifier, bypass or output
- Higher system ratings
- Bypass transformer or stabilizer
- Analog and digital meters (72 x 72mm or 96 x 96mm)
- Digital outputs (NO/NC relay output)
- Communication (NMC, RS-485 Modbus or TCP, IEC 61850)
- Inverter static switch EA
- Independent static bypass switch (ISBS) control
- Voltage limiting unit (to withstand Forsmark event)
- DC & AC ground fault alarm
- Customized footprint
- Air filters, color, space heaters, panel lighting
- Battery protection (Fuse, MCCB)
- Battery temperature alarm
- Battery monitoring system
- Battery coupling
- Downstream distribution
- Converters (AC/DC, DC/DC)

Human-Machine Interface

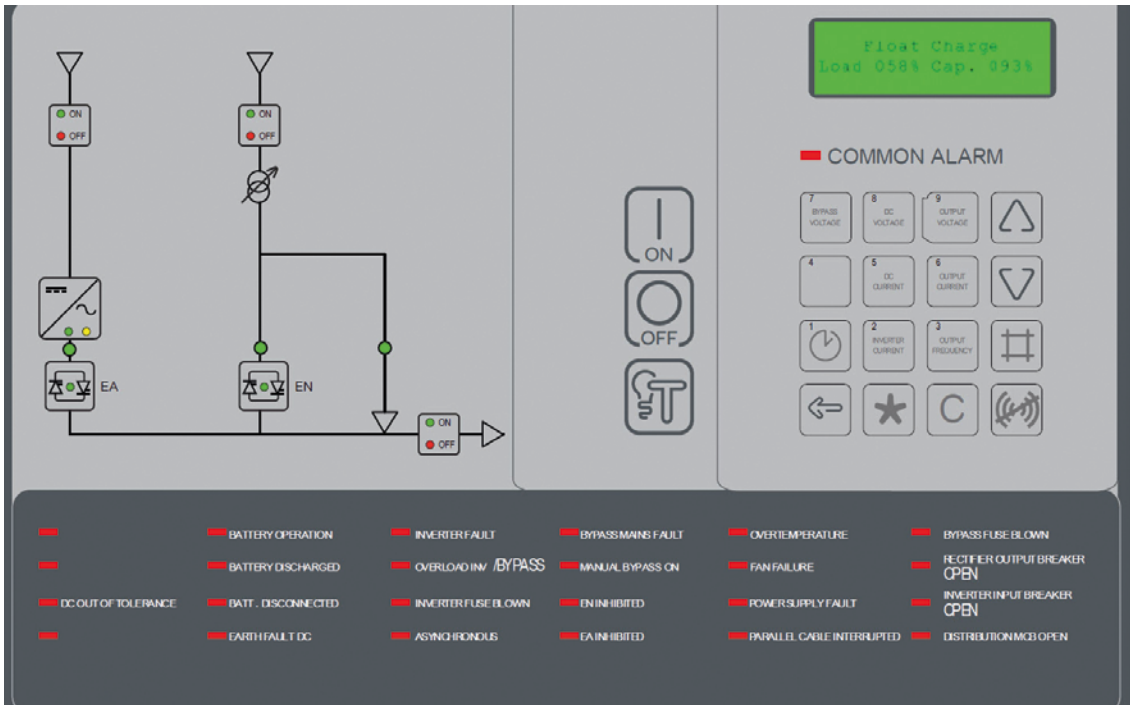

Operational Parameters

- Selectable second display language
- Bypass operation
- Boost charge
- Auto boost (equalize) charge
- Battery-capacity test
- Battery-monitor test (optional)
- Set date/time

System measurements

- Load in percentage of nominal kVA rating
- AC rectifier input voltage and current
- AC bypass input voltage
- Total DC current, battery voltage, and battery current
- Battery temperature (with optional sensor)
- AC Inverter current
- AC output voltage, current, and frequency
- AC output peak current
- Battery backup time remaining (optional with string type battery monitor)
- Event log with date and time (operating mode changes and alarms)

System alarms

- Input power failure
- DC earth fault
- Inverter fuse blown
- DC out of tolerance
- Bypass input power failure
- Rectifier fuse blown
- Fan failure
- Internal PSU fault
- Battery discharged
- System overtemperature
- EA inhibited (UPS output static switch)
- Battery disconnected
- Inverter ON
- EN inhibited (Bypass static switch)
- Battery operation
- Boost (Equalize) charge ON
- Manual bypass ON
- Rectifier failure
- Rectifier ON
- Asynchronous
- EA ON (UPS output static switch)
- External horn
- Inverter failure
- EN ON (Bypass static switch)
- Overload inverter/bypass

CONTACT US
contactus@gutor.com