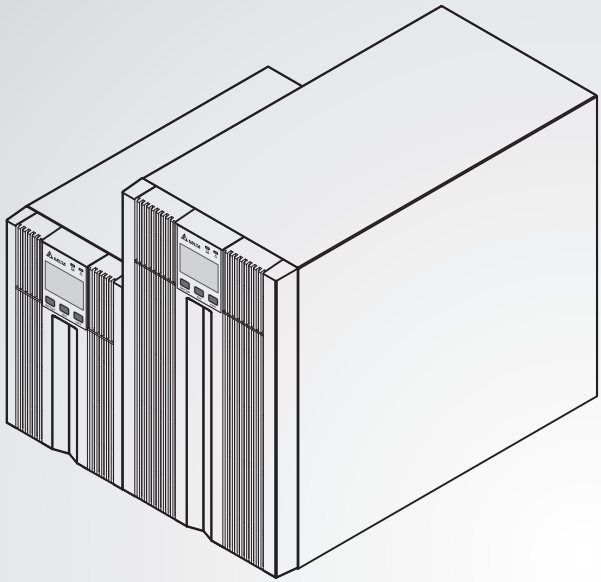

The power behind competitiveness

Delta UPS - Amplon Family

N Series, Single Phase
1/ 2/ 3 kVA

User Manual

www.deltapowersolutions.com

Smarter. Greener. Together.

Save This Manual

This manual contains important instructions and warnings that you should follow during the installation, operation, storage and maintenance of this product. Failure to heed these instructions and warnings will void the warranty.

Copyright © 2018 by Delta Electronics Inc. All Rights Reserved. All rights of this User Manual (“Manual”), including but not limited to the contents, information, and figures are solely owned and reserved by Delta Electronics Inc. (“Delta”). The Manual can only be applied to the operation or the use of this product. Any disposition, duplication, dissemination, reproduction, modification, translation, extraction, or usage of this Manual in whole or in part is prohibited without the prior written permission of Delta. Given that Delta will continuously improve and develop the product, changes may be made to the information in this Manual at any time without obligation to notify any person of such revision or changes. Delta will make all possible efforts to secure the accuracy and the integrity of this Manual. Delta disclaims any kinds or forms of warranty, guarantee, or undertaking, either expressly or implicitly, including but not limited to the completeness, faultlessness, accuracy, non-infringement, merchantability or fitness for a particular purpose of the Manual.

Table of Contents

Chapter 1 : Important Safety Instructions ---------- 1

1.1 Safety Instructions ---------- 1

1.2 Standard Compliance ---------- 4

1.3 Storage---------- 4

Chapter 2 : Introduction ---------- 5

2.1 General Overview ---------- 5

2.2 Exterior & Dimensions ---------- 5

2.3 Package List ---------- 6

Chapter 3 : Operation Panel---------- 8

3.1 LED Indicators ---------- 8

3.2 Multi-function Buttons ---------- 9

3.3 LCD Display ----------11

3.4 7-Segment Display----------14

3.5 Flow Chart of the 7-Segment Display ----------16

Chapter 4 : Rear Panel ----------18

Chapter 5 : Operation Modes ----------19

5.1 Standby Mode----------19

5.2 On-line Mode ----------19

5.3 Bypass Mode----------19

5.4 Battery Mode ----------19

5.5 Setup Mode ----------20

Chapter 6 : Turn-on, Cold Start & Turn-off Procedures --------22

6.1 Turn-on Procedures----------22

6.2 Cold Start Procedures----------22

6.3 Turn-off Procedures----------22

Chapter 7 : Alarm ----------23

Chapter 8 : Optional Accessories ----------24

Chapter 9 : Troubleshooting ----------25

Chapter 10 : Maintenance ----------28

10.1 UPS ----------28

10.2 Batteries ----------28

10.3 Fan ----------29

Appendix 1 : Technical Specifications----------30

Appendix 2 : Warranty ----------32

Chapter 1 : Important Safety Instructions

1.1 Safety Instructions

Installation Warnings

- Before installation and usage, please read this ***User Manual*** thoroughly. This helps you to use the product correctly and safely.
- Install the UPS in a well-ventilated area, away from excess moisture, heat, dust, flammable gas or explosives.
- To avoid fire accidents and electric shock, please install the UPS in a temperate and humidity well-controlled indoor area free of conductive contaminants. For the temperature and humidity specifications, please refer to ***Appendix 1 : Technical Specifications***.
- Leave adequate space (at least 15cm) around all sides of the UPS for proper ventilation.

Connection Warnings

- The UPS must be well grounded due to a possible risk of current leakage.
- The installation of upstream and downstream protective devices is highly recommended when the UPS is connected to the mains and the loads.
- The protective devices connecting to the UPS must be installed near the UPS and must be easily accessible for operation.
- Do not use extension cords to connect the UPS to an AC outlet.
- Do not plug the UPS's input power cord (provided) into its own output sockets.
- If you need to move the UPS or perform re-wiring, please turn off the AC input power and ensure that the UPS has been safely shutdown. Otherwise, the output end might still be energized, which might cause electric shock.
- The UPS output cable should be shorter than 10m.

Usage Warnings

- This is a class-A product. In a domestic environment, this product may cause radio interference, in which case, the user is required to take adequate measures.
- The UPS can be used to power computers and associated peripheral devices, such as monitors, modems, cartridge tape drives, external hard drives, etc.
- It is strictly forbidden to connect the UPS with:
  1. any regenerative-type loads.
  2. any asymmetrical loads (ex. half-wave rectifier).
- To ensure reliable operation of the UPS and to protect the UPS from overheating, the slits and openings in the UPS must not be blocked or covered.
- Before usage, you must allow the UPS to adjust to room temperature for at least one hour to avoid moisture condensing inside the UPS.
- Do not pour and splash any liquid on the UPS. Do not insert any object into the UPS's slits and openings. Do not put beverage containers on or around the UPS.
- When an emergency occurs, press the **OFF** button (OFF) and release it after you hear one beep to turn off the UPS. Cut off the input power to completely shut down the UPS.
- Do not use any cleaning liquid or cleaning spray to clean the UPS. Before cleaning, please make sure that the UPS has been completely shut down, the UPS's input power cord has been unplugged, and the built-in batteries have been disconnected.
- All maintenance services must be performed by qualified service personnel. Forbid opening or removing the cover of the UPS yourself to avoid high voltage electric shock.
- You must contact qualified service personnel if either of the following events occur:
  1. Liquid is poured or splashed on the UPS.
  2. The UPS does not run normally after this ***User Manual*** is carefully observed.

NOTE:
If you use the UPS in an area that generates or incurs dust, you should install a dust filter in the UPS to ensure normal product life and function.

Battery Warnings

UPS Rating	Built-in Batteries	Battery Q'ty	Battery Type	Battery Voltage	Note
1kVA	Yes	2	9Ah sealed lead-acid battery	24Vdc	The UPS cannot connect any external battery pack.
2kVA		4		48Vdc	
3kVA		6		72Vdc	

- Keep the batteries away from heat sources. Do not open or mutilate the batteries. The released electrolyte is harmful to the skin and eyes and may be toxic.
- A battery can present a risk of electric shock and high short-circuit current.
- Servicing of batteries must be performed or supervised by qualified service personnel knowledgeable in batteries and the required precautions. Keep unauthorized personnel away from batteries.
- The risk of electric shock and short-circuit current is possible when the batteries are connected to the UPS. Before maintenance, disconnect all batteries to cut off the battery power.
- For battery replacement, only use the same number and type of batteries.
- Observe the following before replacing the batteries:
  1. Remove watches, rings, or other metal objects.
  2. Use tools with insulated handles.
  3. Wear rubber gloves and boots.
  4. Do not lay tools or metal parts on the top of batteries.
  5. Before battery removal, replacement or installation, disconnect any circuit connected to the batteries.
- Do not connect the batteries in reverse; otherwise, a risk of electric shock or fire accidents might occur.

WARNING:

The risk of electric shock and short-circuit current is possible when the batteries are still connected to the UPS even though the UPS is disconnected from the mains. Do not forget to cut off the battery source before maintenance.

1.2 Standard Compliance

- CE
- RCM
- EN 62040-1
- EN 62040-2 Category C2

1.3 Storage

- **Prior to installation**

  If the UPS needs to be stored prior to installation, it should be placed in a dry area. The allowable storage temperature is between -15°C and +50°C (5°F~122°F).

- **After usage**

  Press the OFF button, make sure the UPS is shutdown, disconnect the UPS from the utility power, remove all equipment from the UPS, and store the UPS in a dry and well-ventilated area at a temperature between -15°C and +50°C (5°F~122°F). Idle batteries must be recharged fully approximately every three months if the UPS needs to be stored for an extended period of time. The charging time must not be less than 24 hours each time.

NOTE :
After storage and before start-up of the UPS, you must allow the UPS to adjust to room temperature (20°C~25°C or 68°F~77°F) for at least one hour to avoid moisture condensing inside the UPS.

Chapter 2 : Introduction

2.1 General Overview

The N series UPS is a single-phase on-line UPS providing reliable and consistent sine-wave quality power to your electronic equipment. It adopts the latest technology and the highest quality components providing output power factor up to 0.9, and its efficiency in on-line mode can reach at maximum 93%. The UPS not only provides safe, reliable and uninterrupted power to your sensitive electronic equipment at all times, but also produces greater electronic power efficiency at less cost. Its compact design does not occupy much space and is easy to use. There are three different ratings, 1kVA, 2kVA and 3kVA, for your selection.

2.2 Exterior & Dimensions

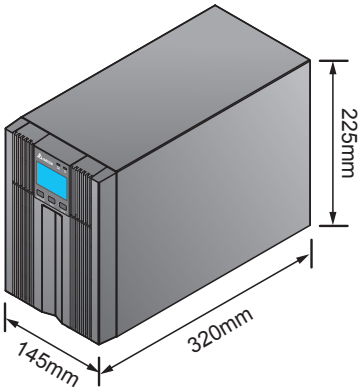

(Figure 2-1 : 1 kVA Exterior & Dimensions)

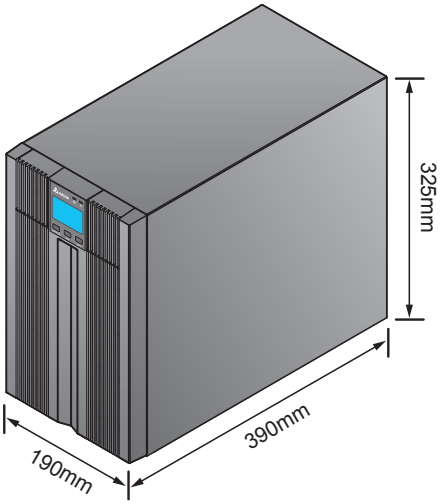

(Figure 2-2 : 2/3 kVA Exterior & Dimensions)

2.3 Package List

- **For models UPS102N2000B035 (1kVA), UPS202N2000B035 (2kVA) & UPS302N2000B035 (3kVA):**

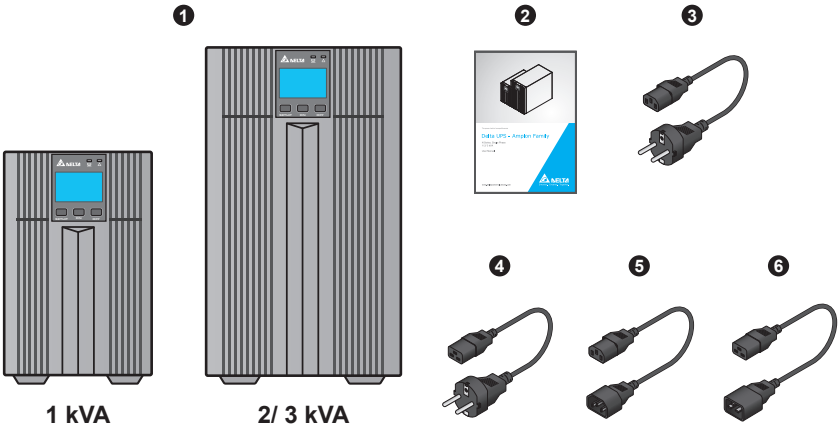

No.	Item	Q'ty	1kVA	2/ 3kVA
❶	UPS	1 PC	✓	✓
❷	User Manual	1 PC	✓	✓
❸	Input Power Cord (10 A)	1 PC	✓	✕
❹	Input Power Cord (16 A)	1 PC	✕	✓
❺	Output Power Cord (10 A)	1 PC	✓	✓
❻	Output Power Cord (16 A)	1 PC	✕	✓

- **For models UPS102N2000B0B6 (1kVA), UPS202N2000B0B6 (2kVA) & UPS302N2000B0B6 (3kVA):**

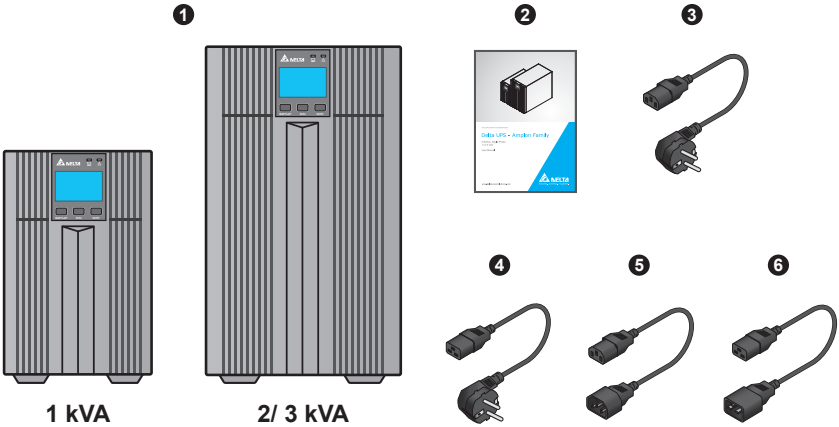

No.	Item	Q'ty	1kVA	2/ 3kVA
❶	UPS	1 PC	✓	✓
❷	User Manual	1 PC	✓	✓
❸	Input Power Cord (10 A)	1 PC	✓	✕
❹	Input Power Cord (16 A)	1 PC	✕	✓
❺	Output Power Cord (10 A)	1 PC	✓	✓
❻	Output Power Cord (16 A)	1 PC	✕	✓

NOTE :

1. If there is any damage or anything missing, please immediately contact the dealer from whom you purchased the unit.
2. If the UPS needs to be returned, carefully repack the UPS and all of the accessories using the original packing material that came with the unit.

Chapter 3 : Operation Panel

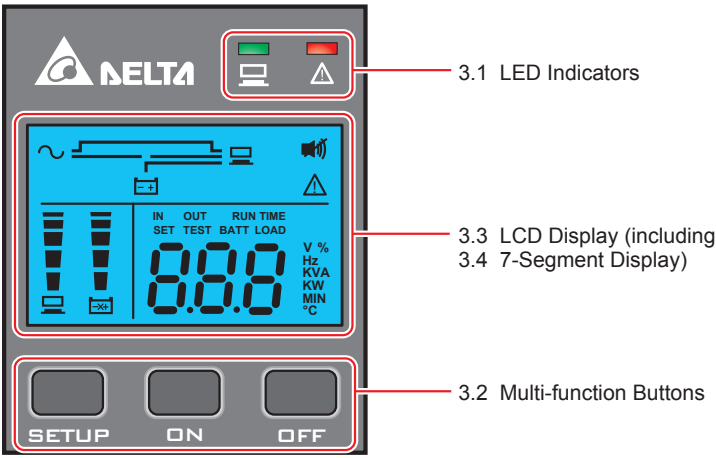

3.1 LED Indicators

No.	LED	Description
1		Indicates the output status. 1. ON (green): There is output 2. OFF: There is no output
2		1. ON (red): The UPS detects an internal fault or an environmental fault. You could refer to ***3.3 LCD Display - No. 9*** for more information. 2. Flashing (red): The UPS has the following warning message(s). a. : There is no battery or battery replacement is needed. b. 120 : The UPS is overloaded. c. E11 : Charging voltage is too high or too low.

3.2 Multi-function Buttons

No.	Multi-function Button	Description
1	ON	The button has multi-function. Please refer to the following for detailed information. **1. Turn-on:** • In standby mode, press and hold the button for 3 seconds, release it after you hear one beep and the UPS will run in on-line mode. • Cold start: When there is no AC input, press and hold the button for 3 seconds, release it after you hear one beep and the UPS will start up in battery mode. **2. Battery Test:** A battery test can only be executed in on-line mode. • For automatic regular battery test, you must install the Virtual COM Port Driver and the UPSentry 2012 software (please download from http://www.deltapowersolutions.com/en/mcis/) or configure the SNMP card (optional) or MODBUS card (optional). • For manual battery test, please press and hold the button for 3 seconds, release it after you hear one beep, and the UPS will transfer to run in battery mode and perform a 10-second battery test. If the test result is ok, the LCD will show 'PAS' and the UPS will return to on-line mode. If the test result is abnormal, the LCD will show 'FAL', the LED will flash, the warning icon and no-battery/ battery replacement icon will illuminate, and the UPS will return to on-line mode. **3. Buzzer Off:** When the buzzer is on, press the button for 0.1 second to turn the buzzer off. Please note that the buzzer will automatically turn on when a new alarm occurs. The buzzer can't be manually turned on after it has been muted. **4. Confirmation:** In setup mode, press the button for 0.1 second to confirm your parameter setup.

No.	Multi-function Button	Description
2	OFF	The button has multi-function. Please refer to the following for detailed information. **1. Turn-off:** ● In on-line mode, press and hold the button for 3 seconds, release it after you hear one beep and the inverter will be off and the UPS will transfer to run in standby/ bypass mode. The UPS will keep charging the batteries when the UPS is in standby mode even though the button has been pressed. To fully turn off the UPS, it is advised to unplug the input power cord. ● In battery mode, press and hold the button for 3 seconds, release it after you hear one beep and the UPS will turn off its output. **2. Fault Clear:** When the UPS has a fault condition, press and hold the button for 3 seconds, release it after you hear one beep and the UPS will clear the fault condition and return to standby mode. Besides, the LCD will show the relevant error code. For error code information, please refer to ***3.3 LCD Display - No. 9***. **3. Scrolling down:** In setup mode, press the button for 0.1 second to go to the next display.
3	SETUP	The button has multi-function. Please refer to the following for detailed information. **1. Scrolling down:** In non-setup mode, press the button for 0.1 second to go to the next display. **2. Entering into the setup mode:** Press the button for 3 seconds and the UPS will enter into the setup mode. For more information, please refer to ***5.5 Setup Mode***. Please note that only qualified service personnel can perform setup action.

NOTE:
When the backlight of the LCD is off, you can press any button mentioned above to wake up the display and enable each button function.

3.3 LCD Display

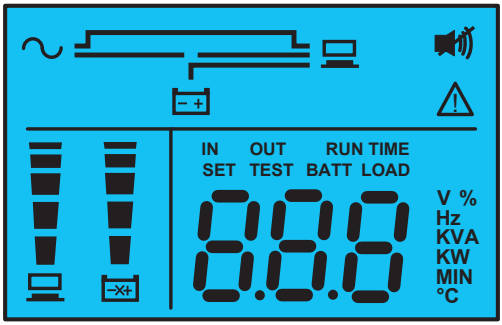

No.	Icon	Naming	Description
1	∿	AC Icon	Indicates the input source status. 1. ON: The AC input is within the acceptable bypass range. 2. Flashing: The AC input is out of the acceptable bypass range but is still sufficient to let the unit operate in on-line mode. 3. OFF: The AC input is out of the acceptable bypass range and is not sufficient to let the unit operate in on-line mode.
2		Output Icon	Indicates the output status. 1. ON: There is output. 2. OFF: There is no output.
3		Battery Power Icon	Indicates the battery power status. 1. ON: Battery power is on. 2. OFF: Output is not supplied by the battery power.

No.	Icon	Naming	Description
4	~	Standby Mode Graph	Illuminates when the UPS is operating in stand-by mode.
5	~ —— ——	Online Mode Graph	Illuminates when the UPS is operating in on-line mode.
6		Battery Mode Graph	Illuminates when the UPS is operating in battery mode.
7	~	Bypass Mode Graph	Illuminates when the UPS is operating in bypass mode.
8		Buzzer Icon	Illuminates when the buzzer is disabled.
9	⚠	Warning Icon	**1. ON:** The unit is shut down due to an internal fault or an environmental fault. The error code will appear on the 7-segment display. Please refer to the following table for each error code and refer to ***3.4 7-Segment Display*** for relevant 7-segment display information.

Error Code	Meaning
E13	Temperature Out of Range
E14	+/- DC BUS High/ Low
E16	Inverter Fault
E18	DC-DC Fault
E19	Abnormal Output/ Inverter Voltage
E21	O/P Short
E77	Charger Fault
Sd1	RPO Shutdown

No.	Icon	Naming	Description
9	⚠	Warning Icon	**2. Flashing:** When the icon is flashing, it would be accompanied with other icon(s) to show you the according warning message(s). a. :There is no battery or battery replacement is needed. b. 120 :The UPS is overloaded. c. E11 : Charging voltage is too high or too low.
10		Load Level Bar Graph	Indicates the status of load level. **ON:** The bar graph illuminates according to the load level *[1].
11		Battery Level Bar Graph	Indicates the status of battery level. **1. ON:** The bar graph illuminates according to the remaining battery capacity *[1]. **2. Flashing:** The bar graph flashes when a low-battery situation occurs.

NOTE:

*[1] means that:

<10%: no segment will illuminate.

10%-29%: the 1st segment will illuminate.

30%-49%: the first two segments will illuminate.

50%-69%: the first three segments will illuminate.

70%-89%: the first four segments will illuminate.

90%-100%: all segments will illuminate.

3.4 7-Segment Display

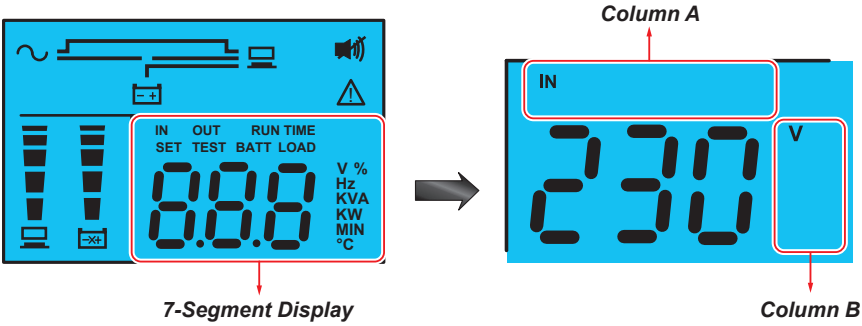

NOTE:
You might need to read the word shown in ***Column A*** together with that in ***Cloumn B*** to understand the display meaning.

No.	Icon	Description
1	IN	**1. IN & V:** When the above two words illuminate together, it means input voltage. **2. IN & Hz:** When the above two words illuminate together, it means input frequency.
2	OUT	**1. OUT & V:** When the above two words illuminate together, it means output voltage. **2. OUT & Hz:** When the above two words illuminate together, it means output frequency.
3	RUN TIME	**RUNTIME & MIN:** When the above two words illuminate together, it means the estimated remaining backup time.

No.	Icon	Description
4	**SET**	When the word '**SET**' illuminates, it means that the UPS is in the setup mode. You can set up the following items via the LCD. For how to setup, please refer to ***5.5 Setup Mode***. 1. Inverter voltage 2. Inverter frequency 3. Bypass range 4. Buzzer disable 5. Overload alarm
5	**TEST**	1. When the word '**TEST**' flashes, it means that the UPS is under test. 2. When the two words '**TEST**' and '**BATT**' flash together, it means that the UPS is under battery test.
6	**BATT**	**1. BATT** & **%:** When the above two words illuminate together, it means the remaining battery capacity. **2. BATT** & **V:** When the above two words illuminate together, it means battery voltage.
7	**LOAD**	**1. LOAD** & **%:** When the above two words illuminate together, it means how much the total load has occupied the rated capacity. **2. LOAD** & **KVA:** When the above two words illuminate together, it means how much kVA the total load is. **3. LOAD** & **KW:** When the above two words illuminate together, it means how much kW the total load is. **4. LOAD** & **% &** ⚠ **:** When the above word (**LOAD**), unit (**%**) and icon ⚠ flash together, it means that the UPS has an overload situation.

No.	Icon	Description
8	V	Means ‘voltage’.
9	%	Means ‘percentage’.
10	Hz	Means ‘frequency’.
11	kVA	Means ‘kVA’.
12	kW	Means ‘kW’.
13	MIN	Means ‘minute’.
14	°C	Means the UPS’s internal temperature.

3.5 Flow Chart of the 7-Segment Display

The following flow chart helps you to understand how to go through each display screen. Here, we take ‘Standby Mode’ as an example. Each of the display diagrams shown below is for reference only. Actual display depends on the operation of the UPS.

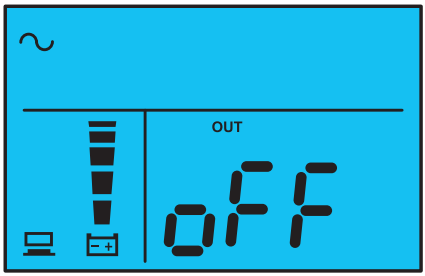

After this screen appears around 10 seconds, the scrolling function will be active. The scrolling button is

.

Standby Mode

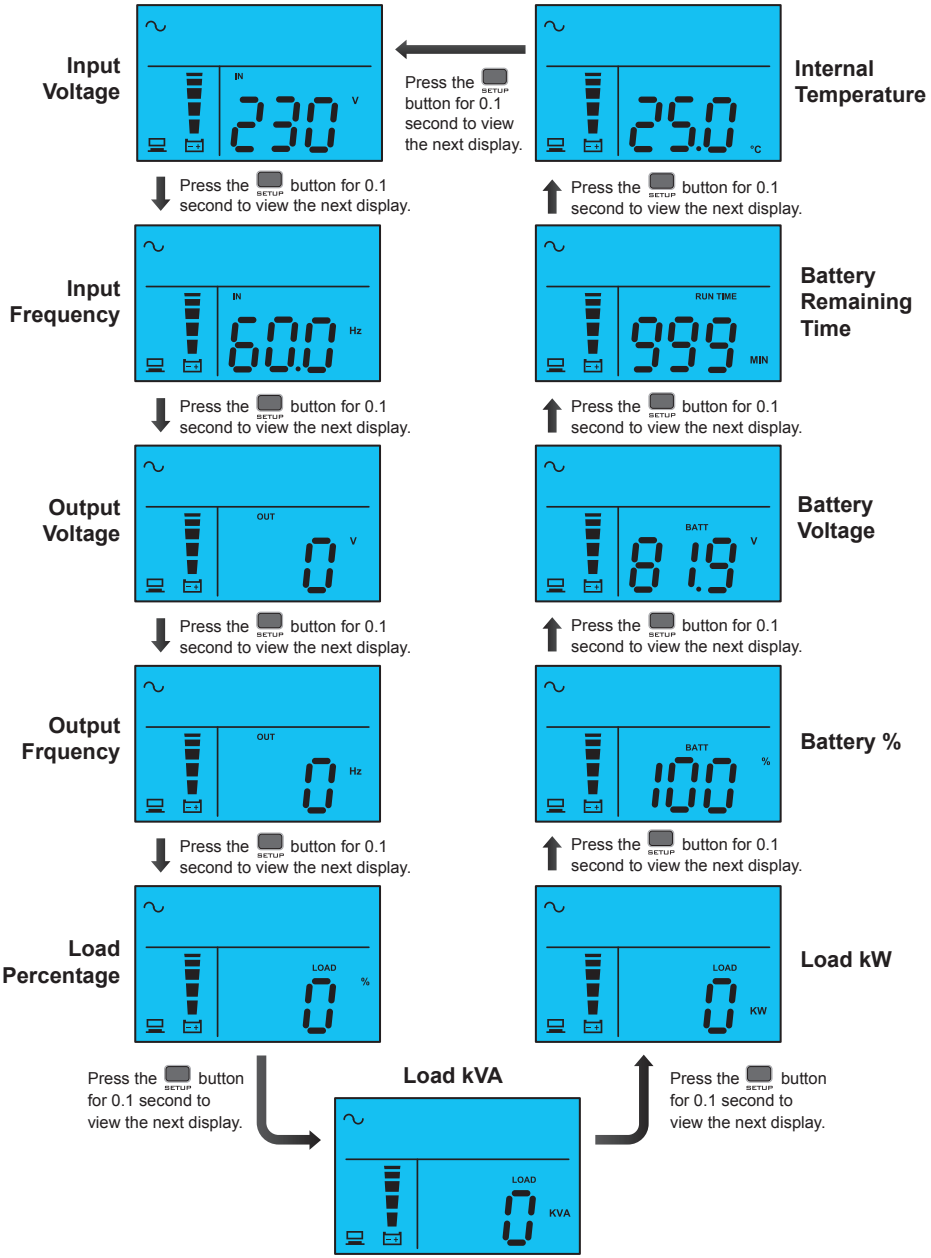

Chapter 4 : Rear Panel

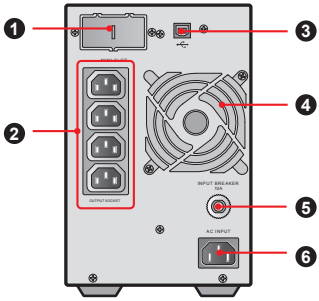

1 kVA

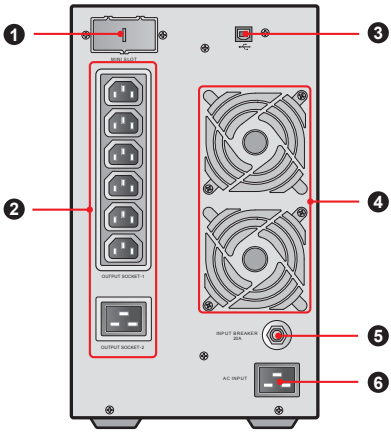

2/ 3 kVA

No.	Item	Functions
❶	Mini Slot	Accepts a mini SNMP, mini Relay I/O, mini MODBUS or mini TVSS card (optional).
❷	Output Socket	Connect to your loads.
	Output Socket_ 1	
	Output Socket_ 2	
❸	USB Port	Connects to your computer. You can monitor the UPS's status via your computer by installing the Virtual COM Port Driver and the UPSentry 2012 software (please download from http://www.deltapowersolutions.com/en/mcis/software-center.php).
❹	Fan(s)	Cool(s) and ventilate(s) the UPS.
❺	Input Breaker	It is the input power's protective device. It is for safety protection.
❻	AC Input Socket	Connects the UPS to the mains.

Chapter 5 : Operation Modes

NOTE :

1. Please refer to ***Chapter 3 : Operation Panel*** to learn how to operate the operation panel and understand the display meaning.
2. Each of the display diagrams shown in this chapter is for reference only. Actual display depends on the operation of the UPS.

5.1 Standby Mode

After the UPS is connected to the AC utility, it will supply power to the UPS and the batteries will be charged. The default setting of the UPS is set in 'STANDBY mode'.

5.2 On-line Mode

In online mode, the connected loads are supplied by the inverter, which derives its power from the utility AC power, and the UPS charges the batteries and provides power protection to its connected loads.

5.3 Bypass Mode

In bypass mode, the critical loads are directly supplied by the utility power and the batteries are charged.

5.4 Battery Mode

When the UPS is operating during a power outage, the batteries provide DC power, which maintains inverter operation to support the connected critical loads.

You can install the Virtual COM Port Driver and the UPSentry 2012 software (please download from http://www.deltapowersolutions.com/en/mcis/software-center.php) or configuare the SNMP card (optional) or MODBUS card (optional) to monitor and estimate the battery remaining capacity before or during an AC power failure. For more information about the SNMP card (optional) or MODBUS card (optional), please refer to its user manual.

NOTE :

You can only enable 'SHUTDOWN AFTER' function in battery mode. For information about 'SHUTDOWN AFTER' function, please contact service personnel.

5.5 Setup Mode

Press the scrolling button SETUP for more than 3 seconds and the LCD will go into the setup menu.

Please note that only qualified service personnel can perform setup action. In setup mode, you can set up the following items:

1. Inverter voltage
2. Inverter frequency
3. Bypass range
4. Buzzer disable
5. Overload alarm

For setup procedures, please refer to the following:

1. Press the SETUP button for more than 3 seconds to enter into the setup mode.
2. Press the SETUP button for 0.1 second to change the parameter.
3. Press the ON button for 0.1 second to confirm your parameter.
4. Press the OFF button for 0.1 second to go to the next setup item.
5. You can skip to the next setup item by pressing the OFF button for 0.1 second.
6. In setup mode, press the SETUP button for more than 3 seconds, the LCD will go back to the original display.
7. In setup mode, if you don't press any button for more than 2 minutes, the LCD will exit from the setup mode and go back to the original display automatically.

For some settings, they can't be set in certain operation modes. Please refer to the table below for relevant information.

Setup Item	Standby Mode	On-line Mode	Bypass Mode	Battery Mode
Inverter Voltage Setup	✓	✗	✓	✗
Inverter Frequency Setup	✓	✗	✓	✗
Bypass Range Setup	✓	✓	✓	✓

Setup Item	Standby Mode	On-line Mode	Bypass Mode	Battery Mode
Buzzer Disable Setup	✓	✓	✓	✓
Overload Alarm Setup	✓	✓	✓	✓

NOTE: Please note that only qualified service personnel can perform setup action.

Setup Mode Flow Chart

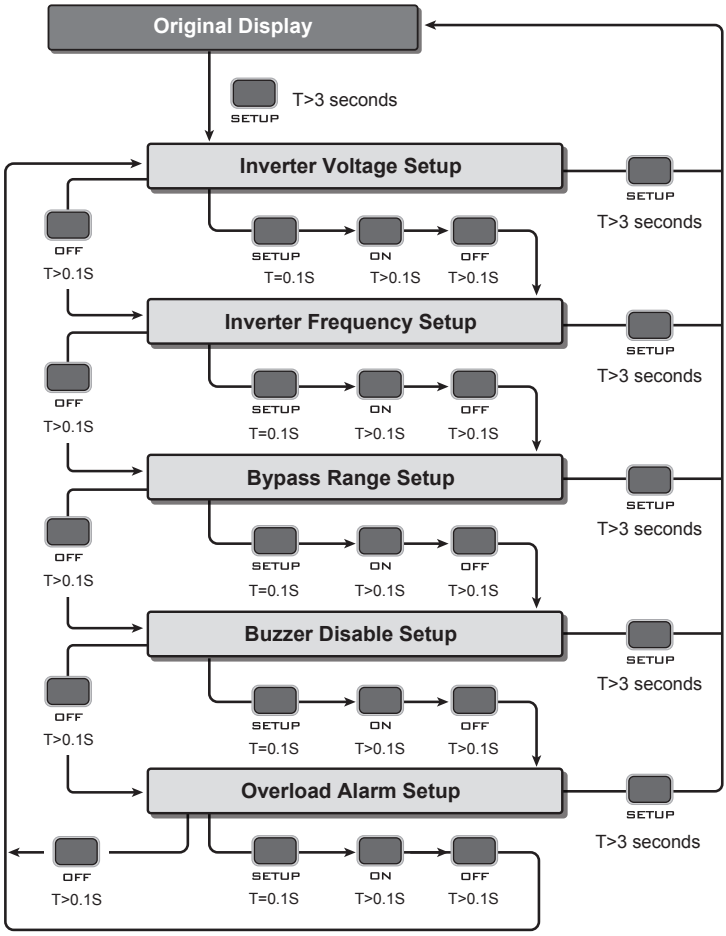

Chapter 6 : Turn-on, Cold Start & Turn-off Procedures

NOTE :
Please refer to ***Chapter 3 : Operation Panel*** to learn how to operate the operation panel and understand the display meaning.

6.1 Turn-on Procedures

After the UPS is connected to the AC utility, the AC utility supplies power to the UPS. The UPS is initially set in 'STANDBY mode'. To turn on the UPS, press and hold the ON button for 3 seconds and release it after you hear one beep.

6.2 Cold Start Procedures

Even when there is no utility power, you can still turn on the UPS. Just press and hold the ON button for 3 seconds, release it after you hear one beep, and the UPS will start up and run in battery mode.

6.3 Turn-off Procedures

1. In on-line mode, if you want to turn off the UPS, press and hold the OFF button for 3 seconds and release it after you hear one beep. The inverter will turn off and the UPS will transfer to standby mode.

   The UPS will keep charging the batteries when the UPS is in standby mode even though the OFF button has been pressed. To fully turn off the UPS, it is advised to unplug the input power cord.

2. In battery mode, if you want to turn off the UPS, press and hold the OFF button for 3 seconds and release it after you hear one beep. The UPS will turn off its output.

Chapter 7 : Alarm

No.	Condition	Alarm
1	Battery Mode	The audible alarm beeps once every 2.1 seconds.
2	Low Battery	The audible alarm beeps once every 0.6 second.
3	Battery Missing/ Weak Battery/ Battery Replacement/ *	The audible alarm beeps once every 2.1 seconds.
4	Overload	1. Overload_105%~125%: The audible alarm beeps once every 2.1 seconds. 2. Overload_125%~150%: The audible alarm beeps once every 0.6 seconds.
5	Fault	The audible alarm beeps continuously for 5 seconds when the UPS detects an internal fault.

NOTE :

*: After reconnecting or replacing the batteries, it might take a while for the UPS to switch off the alarm automatically. If, after a period of time, the audible alarm still exists, the user must manually initiate a battery test (press and hold the ON button for 3 seconds and release it after you hear one beep) to clear the alarm.

Chapter 8 : Optional Accessories

No.	Item	Function
1	Dust Filter	Prevents dust from entering into the UPS to ensure UPS reliability and to prolong product life.
2	Mini SNMP Card	Monitors and controls the status of the UPS via a network system.
3	Mini Relay I/O Card	Increases the quantity of dry contacts.
4	Mini MODBUS Card	Lets the UPS have MODBUS communication function.
5	Mini TVSS Card	Lets the UPS have surge protection function.

NOTE :

1. For detailed installation and operation of any accessory mentioned above, please refer to the Quick Guide, User Guide, or Installation & Operation Guide included in the package of the relevant optional accessory.
2. If you want to buy any accessory mentioned above, please contact your local dealer or customer service.

Chapter 9 : Troubleshooting

1. When a problem occur, please check if the following situation exists before contacting Delta service personnel:
   - Is the main input voltage present?
2. Please have the following information ready if you would like to contact the Delta service personnel:
   - Unit information including model, serial number, etc.
   - An exact description of the problem. The more detailed description of the problem, the better.
3. When you see the following problems occur, please follow the solutions shown below.

A. About the error codes shown on the 7-segment Display:

Error Code	Meaning	Possible Cause	Solution
E11	Charger Warning	Charging voltage is too high or too low.	Contact service personnel.
E13	Temperature Out of Range	The UPS temperature is out of range.	1. Check whether the UPS's ventilation is normal. 2. Decrease the loads. 3. Check whether the fan(s) run(s) normally. 4. Clean the filters (if you have installed any).
E14	+/- DC BUS High/ Low	The UPS has abnormalities.	Contact service personnel.

Error Code	Meaning	Possible Cause	Solution
E16	Inverter Fault	The UPS has abnormalities.	Contact service personnel.
E18	DC-DC Fault	The UPS has abnormalities.	Contact service personnel.
E19	Abnormal Output/ Inverter Voltage	The UPS has abnormalities.	Contact service personnel.
E21	O/P Short	Output has a short-circuit issue.	1. Check whether the output has a short-circuit issue. 2. Contact service personnel.
E77	Charger Fault	Charger is damaged.	Contact service personnel.
Sd1	RPO Shutdown	Remote shutdown is executed from dry contact.	After the remote shutdown events are eliminated, follow the turn-on procedures to start up the UPS.
Sd4	Battery Low Shutdown	The UPS transfers to run in battery mode due to AC utility abnormality; however, the battery power is almost used up.	1. Check the main AC source and the input power cord's status. 2. Contact service personnel.

B. About other problems that might happen:

No.	Problem	Possible Cause	Solution
1	Overload	The UPS is overloaded.	Decrease your connected loads.
2	Battery Missing	Internal battery cables are not connected or not firmly connected.	1. Contact service personnel. 2. Connect the internal battery cables and connect them firmly.
3	Weak Battery/ Battery Replacement	Batteries are damaged or battery life time is due.	Contact service personnel.
4	Abnormal Input (when the AC icon ∿ is flashing)	The AC input voltage or frequency is out of the acceptable bypass range.	1. Check whether the AC input voltage or frequency is abnormal. 2. Contact service personnel.

NOTE :
If all possible causes are eliminated but the alarm still appears, please contact your local dealer or customer service.

Chapter 10 : Maintenance

10.1 UPS

- **UPS Cleaning**

  Regularly clean the UPS, especially the slits and openings, to ensure that the air freely flows into the UPS to avoid overheating. If necessary, use an air-gun to clean the slits and openings to prevent any object from blocking or covering these areas.

- **UPS Regular Inspection**

  Regularly check the UPS every half year and inspect:

  1. Whether the UPS, LEDs, and alarm function are operating normally.
  2. Whether battery voltage is normal. If battery voltage is too high or too low, find the root cause.

10.2 Batteries

The N series UPS uses sealed lead-acid batteries. Though the typical battery life cycle is 3~5 years, the battery life depends on the temperature, the usage, and the charging/ discharging frequency. High temperature environments and high charging/ discharging frequency will quickly shorten the battery life. The UPS does not require maintenance by the user; however, the batteries should be checked periodically. Please follow the suggestions below to ensure a normal battery lifetime.

- Keep the usage temperature at 20°C ~25°C.
- Idle batteries must be fully recharged every three months if the UPS needs to be stored for an extended period of time. Please fully charge the batteries (internal and external) until the Battery Level Bar Graph shown on the UPS's LCD is fully on.

NOTE: If the UPS's internal batteries need to be replaced, please contact qualified service personnel. During battery replacement, the loads attached to the UPS will not be protected if input power fails.

10.3 Fan

Higher temperatures shorten fan life. When the UPS is running, please check if each fan works normally and make sure if the ventilation air can move freely around and through the UPS. If not, contact service personnel.

NOTE:

Please ask your local dealer or customer service for more maintenance information. Do not perform maintenance if you are not trained for it.

Appendix 1 : Technical Specifications

Model		N-1K	N-2K	N-3K
Power Rating		1kVA/0.9kW	2kVA/1.8kW	3kVA/2.7kW
Waveform		Pure Sine Wave		
Input	Nominal Voltage	220/230/240 Vac		
	Voltage Range	175 ~ 280 Vac (100% load); 80 ~ 175 Vac (50% ~ 100% load)		
	Frequency	50/60 Hz ± 10 Hz		
	Power Factor	> 0.99 (full load)		
	iTHD	< 3%		
Output	Power Factor	0.9		
	Voltage	220/230/240 Vac		
	Voltage Regulation	± 2% (linear load)		
	Frequency	50/60 Hz ± 0.05 Hz		
	vTHD	< 3% (linear load)		
	Overload Capability	< 105%: continuous; 105% ~ 125%: 1 minute; 125% ~ 150%: 30 seconds		
	Cress Factor	3:1		
	Connection	IEC C13x4	IEC C13x6, C19x1	
Efficiency	Online Mode	91%	Up to 93%	
Battery	Battery Voltage	24 Vdc	48 Vdc	72 Vdc
	Backup Time (Standard) *	Up to 7 Min.		
	Recharge Time	4hrs to 90%		

Model		N-1K	N-2K	N-3K
Audible Noise		< 45 dBA	< 48 dBA	< 48 dBA
Display		LED indicators & LCD display		
Communication Interfaces		MINI Slot x 1, USB Port x 1		
Physical	Dimensions (W × D × H)	145 x 320 x 225 mm	190 x 390 x 325 mm	190 x 390 x 325 mm
	Weight	9 Kg	18.6 Kg	24.4 Kg
Environment	Operating Temperature	0 ~ 40°C		
	Relative Humidity	5% ~ 95% (non-condensing)		

NOTE:

1. * : When the total load reaches 75%.
2. Please refer to the rating label for the safety rating.
3. All specifications are subject to change without prior notice.

Appendix 2 : Warranty

Seller warrants this product, if used in accordance with all applicable instructions, to be free from original defects in material and workmanship within the warranty period. If the product has any failure problem within the warranty period, Seller will repair or replace the product at its sole discretion according to the failure situation.

This warranty does not apply to normal wear or to damage resulting from improper installation, operation, usage, maintenance or irresistible force (i.e. war, fire, natural disaster, etc.), and this warranty also expressly excludes all incidental and consequential damages.

Maintenance service for a fee is provided for any damage out of the warranty period. If any maintenance is required, please directly contact the supplier or Seller.

WARNING!

The individual user should take care to determine prior to use whether the environment and the load characteristic are suitable, adequate or safe for the installation and the usage of this product. The User Manual must be carefully followed. Seller makes no representation or warranty as to the suitability or fitness of this product for any specific application.

No. 501322670404
Version : V 4.4
Release Date : 2018_03_15

Smarter. Greener. Together.

5013226704